6GHz High Linearity I/Q Demodulator with Wideband IF Amplifier

FEATURES

- **300MHz to 6GHz Operating Frequency**
- **Wide IF Bandwidth: DC to 1GHz (–1dB Bandwidth)**
- **High Mixer IIP3: 30dBm at 1.9GHz**
- **High Total OIP3: 40dBm at 1.9GHz**
- **High Total OIP2: 74dBm at 1.9GHz**
- **User Adjustable OIP2 to 80dBm**
- **User Adjustable Image Rejection to 60dB**
- **User Adjustable DC Offset Null**
- **Serial Interface**
- Power Conversion Gain: 7.7dB at 1.9GHz
- 31dB RF Attenuator with 1dB Step Size
- RF Switch with 40dB Isolation at 1.9GHz
- Single-Ended RF Inputs with On-Chip Transformer
- IF Amplifier Gain Adjustable in 8 Steps
- Operating Temperature Range (T_C): –40°C to 105°C
- 32-Lead 5mm × 5mm QFN Package

APPLICATIONS

- 4G and 5G Base Station Receivers
- Wideband DPD Receivers
- Point-To-Point Broadband Radios
- High Linearity Direct Conversion I/Q Receivers
- Image Rejection Receivers

DESCRIPTION

The LTC®5586 is a direct conversion quadrature demodulator optimized for high linearity zero-IF and low IF receiver applications in the 300MHz to 6GHz frequency range. The very wide IF bandwidth of more than 1GHz makes the LTC5586 particularly suited for demodulation of very wideband signals, especially in digital predistortion (DPD) applications. The outstanding dynamic range of the LTC5586 makes the device suitable for demanding infrastructure direct conversion applications. Proprietary technology inside the LTC5586 provides the capability to optimize OIP2 to 80dBm, and achieve image rejection better than 60dB. The DC offset control function allows nulling of the DC offset at the A/D converter input, thereby optimizing the dynamic range of true zero-IF receivers that use DC coupled IF signal paths. The wideband RF and LO input ports make it possible to cover all the major wireless infrastructure frequency bands using a single device. The IF outputs of the LTC5586 are designed to interface directly with most common A/D converter input interfaces. The high OIP3 and high conversion gain of the device eliminate the need for additional amplifiers in the IF signal path.

, LT, LTC, LTM, Linear Technology and the Linear logo are registered trademarks of Analog Devices, Inc. All other trademarks are the property of their respective owners.

TYPICAL APPLICATION

Dual Band Transmitter with DPD Receiver

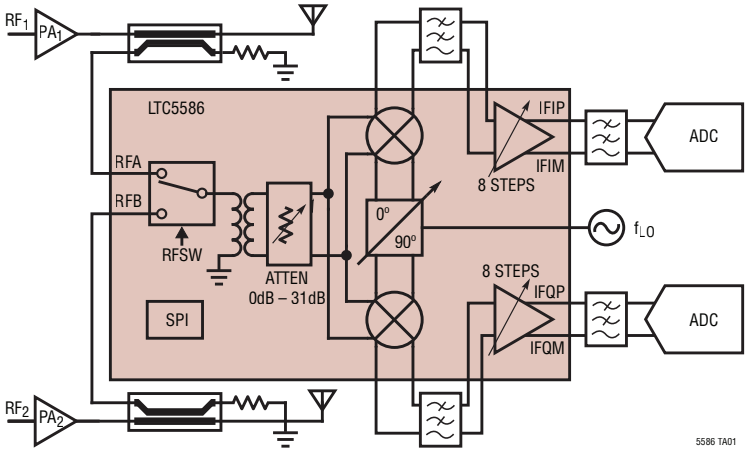

Gain, OIP3 and OIP2 vs Temperature (T_C) (Unoptimized)

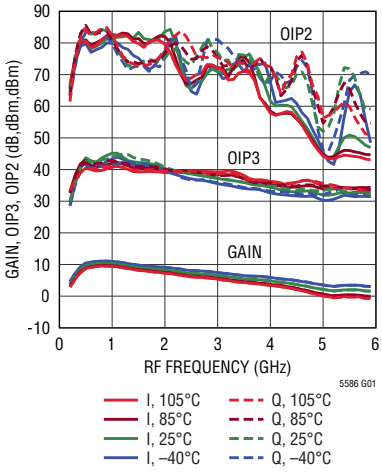

ABSOLUTE MAXIMUM RATINGS

(Note 1)

VCC, VCCN Supply Voltage (Note 21) ..... –0.3V to 5.5V
OVDD, SDO Voltage (Note 18)..... –0.3V to 3.8V
RFA, RFB DC Voltage .....1.5V to 2.0V
LOP, LOM DC Voltage .....2.1V to 2.8V
IFIM, IFIP, IFQP, IFQM DC Voltage ..... –0.3V to 3.5V
AIM, AIP, AQM, AQP
DC Voltage..... V_{CC} – 1.7V to V_{CC} – 1.2V
MIM, MIP, MQM, MQP
DC Voltage..... V_{CC} – 1.7V to V_{CC} – 1.2V
Voltage on Any Other Pin..... –0.3V to 5.5V
LOP, LOM, RFA, RFB Input Power (Note 17) .....+20dBm
Output Short Circuit Duration (Notes 14, 17)... Indefinite
Maximum Junction Temperature (T_{JMAX}) ..... 150°C
Case Operating Temperature Range (T_C)–40°C to 105°C
Storage Temperature Range ..... –65°C to 150°C

PIN CONFIGURATION

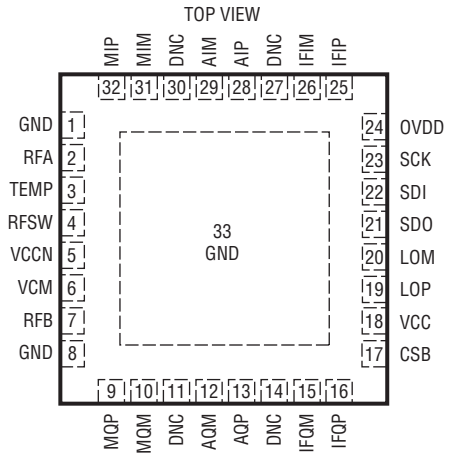

UH PACKAGE
32-LEAD (5mm × 5mm) PLASTIC QFN
T_{JMAX} = 150°C, θ_{JC} = 7.7°C/W
EXPOSED PAD (PIN 33) IS GND, MUST BE SOLDERED TO PCB

ORDER INFORMATION

http://www.linear.com/product/LTC5586#orderinfo

LEAD FREE FINISH	TAPE AND REEL	PART MARKING	PACKAGE DESCRIPTION	TEMPERATURE RANGE
LTC5586IUH#PBF	LTC5586IUH#TRPBF	5586	32-Lead (5mm x 5mm) Plastic QFN	–40°C to 105°C

Consult LTC Marketing for parts specified with wider operating temperature ranges.

For more information on lead free part marking, go to: http://www.linear.com/leadfree/

For more information on tape and reel specifications, go to: http://www.linear.com/tapeandreel/. Some packages are available in 500 unit reels through designated sales channels with #TRMPBF suffix.

ELECTRICAL CHARACTERISTICS

T_C = 25°C, V_{CC} = V_{CCN} = 5V, OVDD = CSB = RFSW = 3.3V, SDI = SCK = 0V, VCM = 0.9V, P_{IF} = 1.5dBm (–1.5dBm/tone for 2-tone tests), P_{LO} = 6dBm, all registers at default values unless otherwise noted. (Notes 2, 3, 6, 9, 19, 22)

SYMBOL	PARAMETER	CONDITIONS	MIN	TYP	MAX	UNITS
$f_{RF(RANGE)}$	RF Input Frequency Range	(Note 12)		0.3 to 6.0		GHz
$f_{LO(RANGE)}$	LO Input Frequency Range	(Note 12)		0.3 to 6.0		GHz
RL_{RF}	RF Input Return Loss	f_{RF} = 300MHz to 500MHz (Note 5) f_{RF} = 500MHz to 6.0GHz		>10 >10		dB dB
RL_{LO}	LO Input Return Loss	f_{LO} = 300MHz to 6.0GHz		>10		dB
$P_{LO(RANGE)}$	LO Input Power Range	(Note 12)		–6 to 12		dBm
$G_{P(MAX)}$	Maximum Power Conversion Gain ATT = 0x00, AMPG = 0x06, R_{LOAD} = 100Ω Differential (Note 8)	f_{RF} = 400MHz f_{RF} = 900MHz f_{RF} = 1900MHz f_{RF} = 2600MHz f_{RF} = 3500MHz f_{RF} = 5800MHz		7.4 9.2 7.7 7.1 4.3 0.7		dB dB dB dB dB dB
$G_{P(MIN)}$	Power Conversion Gain at Maximum Attenuation. ATT = 0x1F, AMPG = 0x06, R_{LOAD} = 100Ω, Differential (Note 8)	f_{RF} = 400MHz f_{RF} = 900MHz f_{RF} = 1900MHz f_{RF} = 2600MHz f_{RF} = 3500MHz f_{RF} = 5800MHz		–23.3 –21.3 –21.8 –23.5 –24.0 –23.9		dB dB dB dB dB dB
	Attenuation Step Size			1.0		dB
	Attenuation Step Accuracy			0.2		dB
	RFA, RFB Gain Error			0.05		dB
	RFA, RFB Switching Time			100		ns
AB_{ISO}	RFA, RFB Isolation	f_{RF} = 400MHz f_{RF} = 900MHz f_{RF} = 1900MHz f_{RF} = 2600MHz f_{RF} = 3500MHz f_{RF} = 5800MHz		49 48 40 42 38 25		dB dB dB dB dB dB
NF	Noise Figure, Double Side Band (Note 4)	f_{RF} = 400MHz f_{RF} = 900MHz f_{RF} = 1900MHz f_{RF} = 2600MHz f_{RF} = 3500MHz f_{RF} = 5800MHz		19.0 17.8 19.5 21.1 23.2 31.0		dB dB dB dB dB dB
$NF_{BLOCKING}$	Noise Figure Under Blocking Conditions Double Side Band, $P_{IF,\ BLOCKER}$ = 1.5dBm (Note 7)	f_{RF} = 400MHz f_{RF} = 900MHz f_{RF} = 1900MHz f_{RF} = 2600MHz f_{RF} = 3500MHz f_{RF} = 5800MHz		19.7 18.9 20.8 22.5 24.8 30.2		dB dB dB dB dB dB
OIP3	Output 3rd Order Intercept Unadjusted/Adjusted	f_{RF} = 400MHz f_{RF} = 900MHz f_{RF} = 1900MHz f_{RF} = 2600MHz f_{RF} = 3500MHz f_{RF} = 5800MHz		41/44 42/43 40/42 38/40 35/36 32/33		dBm dBm dBm dBm dBm dBm
OIP2	Output 2nd Order Intercept Unadjusted/Adjusted	f_{RF} = 400MHz f_{RF} = 900MHz f_{RF} = 1900MHz f_{RF} = 2600MHz f_{RF} = 3500MHz f_{RF} = 5800MHz		75/80 75/80 74/80 65/80 60/70 49/56		dBm dBm dBm dBm dBm dBm

ELECTRICAL CHARACTERISTICS

T_C = 25°C, V_{CC} = V_{CCN} = 5V, OVDD = CSB = RFSW = 3.3V, SDI = SCK = 0V, VCM = 0.9V, P_{IF} = 1.5dBm (–1.5dBm/tone for 2-tone tests), P_{LO} = 6dBm, all registers at default values unless otherwise noted. (Notes 2, 3, 6, 9, 19, 22)

SYMBOL	PARAMETER	CONDITIONS	MIN	TYP	MAX	UNITS
$IIP3_{DEMOD}$	Input 3rd Order Intercept Without Amplifier Unadjusted	f_{RF} = 400MHz f_{RF} = 900MHz f_{RF} = 1900MHz f_{RF} = 2600MHz f_{RF} = 3500MHz f_{RF} = 5800MHz		31 29 30 30 30 32		dBm dBm dBm dBm dBm dBm
$OIP3_{AMP}$	Output 3rd Order Intercept, Amplifier Only (Note 15)	f_{IF} = 10MHz f_{IF} = 100MHz f_{IF} = 200MHz f_{IF} = 300MHz f_{IF} = 500MHz f_{IF} = 1000MHz		42 41 38 37 35 30		dBm dBm dBm dBm dBm dBm
HD2	2nd Order Harmonic Distortion Unadjusted/Adjusted	f_{RF} = 400MHz f_{RF} = 900MHz f_{RF} = 1900MHz f_{RF} = 2600MHz f_{RF} = 3500MHz f_{RF} = 5800MHz		–63/–85 –62/–90 –63/–90 –61/–90 –64/–85 –52/–74		dBc dBc dBc dBc dBc dBc
HD3	3rd Order Harmonic Distortion Unadjusted/Adjusted	f_{RF} = 400MHz f_{RF} = 900MHz f_{RF} = 1900MHz f_{RF} = 2600MHz f_{RF} = 3500MHz f_{RF} = 5800MHz		–83/–84 –80/–81 –80/–81 –80/–80 –79/–78 –69/–73		dBc dBc dBc dBc dBc dBc
P1dB	Output 1dB Compression Point	f_{RF} = 400MHz f_{RF} = 900MHz f_{RF} = 1900MHz f_{RF} = 2600MHz f_{RF} = 3500MHz f_{RF} = 5800MHz		10.5 13 13 13 13 12.5		dBm dBm dBm dBm dBm dBm
DC_{OFFSET}	DC Offset, Unadjusted (Note 13)	f_{RF} = 400MHz f_{RF} = 900MHz f_{RF} = 1900MHz f_{RF} = 2600MHz f_{RF} = 3500MHz f_{RF} = 5800MHz		20 21 22 25 35 45		mV mV mV mV mV mV
$DC_{OFF(RANGE)}$	DC Offset Adjustment Range	DCOI, DCOQ = 0x00 to 0xFF		–75 to 75		mV
$DC_{OFF(STEP)}$	DC Offset Step Size			640		µV
ΔG	I/Q Gain Mismatch, Unadjusted	f_{RF} = 400MHz f_{RF} = 900MHz f_{RF} = 1900MHz f_{RF} = 2600MHz f_{RF} = 3500MHz f_{RF} = 5800MHz		0.04 0.05 0.06 0.06 0.07 0.10		dB dB dB dB dB dB
$ΔG_{(RANGE)}$	I/Q Gain Mismatch Adjustment Range	GERR = 0x00 to 0x3F		–0.5 to 0.5		dB
ΔG(STEP)	I/Q Gain Mismatch Adjustment Step Size			0.016		dB
Δϕ	I/Q Phase Mismatch, Unadjusted	f_{RF} = 400MHz f_{RF} = 900MHz f_{RF} = 1900MHz f_{RF} = 2600MHz f_{RF} = 3500MHz f_{RF} = 5800MHz		0.4 1.1 1.1 2.3 3.2 0.3		Deg Deg Deg Deg Deg Deg
$Δϕ_{(RANGE)}$	I/Q Phase Mismatch Adjustment Range	PHA = 0x000 to 0x1FF		–2.5 to 2.5		Deg

ELECTRICAL CHARACTERISTICS

T_C = 25°C, V_{CC} = V_{CCN} = 5V, OVDD = CSB = RFSW = 3.3V, SDI = SCK = 0V, VCM = 0.9V, P_{IF} = 1.5dBm (–1.5dBm/tone for 2-tone tests), P_{LO} = 6dBm, all registers at default values unless otherwise noted. (Notes 2, 3, 6, 9, 19, 22)

SYMBOL	PARAMETER	CONDITIONS	MIN	TYP	MAX	UNITS
$\Delta\phi_{(STEP)}$	I/Q Phase Mismatch Adjustment Step Size			0.05		Deg
IRR	Image Rejection Ratio Unadjusted/Adjusted (Note 10)	f_{RF} = 400MHz		51/68		dB
		f_{RF} = 700MHz		44/70		dB
		f_{RF} = 1900MHz		45/68		dB
		f_{RF} = 2600MHz		39/69		dB
		f_{RF} = 3500MHz		33/70		dB
		f_{RF} = 5800MHz		39/70		dB
LR_{LEAK}	LO to RF Leakage	f_{LO} = 400MHz		–67		dBm
		f_{LO} = 900MHz		–63		dBm
		f_{LO} = 1900MHz		–56		dBm
		f_{LO} = 2600MHz		–55		dBm
		f_{LO} = 3500MHz		–45		dBm
		f_{LO} = 5800MHz		–47		dBm
RL_{ISO}	RF to LO Isolation	f_{RF} = 400MHz		59		dB
		f_{RF} = 900MHz		65		dB
		f_{RF} = 1900MHz		66		dB
		f_{RF} = 2600MHz		62		dB
		f_{RF} = 3500MHz		57		dB
		f_{RF} = 5800MHz		52		dB
RI_{ISO}	RF to IF Isolation (Note 16)	f_{RF} = 400MHz		70		dB
		f_{RF} = 900MHz		65		dB
		f_{RF} = 1900MHz		50		dB
		f_{RF} = 2600MHz		53		dB
		f_{RF} = 3500MHz		48		dB
		f_{RF} = 5800MHz		47		dB
LI_{LEAK}	LO to IF Leakage (Note 16)	f_{LO} = 400MHz		–37		dBm
		f_{LO} = 900MHz		–36		dBm
		f_{LO} = 1900MHz		–34		dBm
		f_{LO} = 2600MHz		–33		dBm
		f_{LO} = 3500MHz		–42		dBm
		f_{LO} = 5800MHz		–36		dBm
Power Supply and Other Parameters						
V_{CC}, V_{CCN}	Supply Voltage		4.75	5.0	5.25	V
I_{CC}	Supply Current		430	440	470	mA
I_{VCCN}	Supply Current to VCCN Pin			700		µA
OV_{DD}	Digital I/O Supply Voltage			1.2 to 3.3		V
V_{DH}	RFSW Input High Voltage (On)		0.7 • OV_{DD}			V
V_{DL}	RFSW Input Low Voltage (Off)				0.3 • OV_{DD}	V
I_{RFSW}	RFSW Pin Input Current	RFSW = 3.3V		1		µA
V_{TEMP}	TEMP Diode Bias Voltage	I_{TEMP} = 100µA into TEMP pin		0.774		V
	TEMP Diode Temperature Slope	I_{TEMP} = 100µA into TEMP pin		–1.52		mV/°C
$Z_{MIX(OUT)}$	Mixer Output Impedance	Differential		100||0.6		Ω||pF
$V_{MIX(OUT)}$	Mixer Output DC Voltage	Common-Mode		3.6		V
$Z_{AMP(IN)}$	Amplifier Input Impedance	Differential		200||0.2		Ω||pF
$V_{AMP(IN)}$	Amplifier DC Input Voltage	Common-Mode		3.0 to 4.0		V
$Z_{AMP(OUT)}$	Amplifier Output Impedance	Differential		4||0.5		kΩ||pF
$I_{AMP(SC)}$	Amplifier DC Output Short Circuit Current	IFIP = IFIM = IFQP = IFQM = 0V		100		mA
$V_{CM(RANGE)}$	VCM Pin Voltage Range (Notes 11, 12)			0.5 to 2.0		V

ELECTRICAL CHARACTERISTICS

T_C = 25°C, V_{CC} = V_{CCN} = 5V, OVDD = CSB = RFSW = 3.3V, SDI = SCK = 0V, VCM = 0.9V, P_{IF} = 1.5dBm (–1.5dBm/tone for 2-tone tests), P_{LO} = 6dBm, all registers at default values unless otherwise noted. (Notes 2, 3, 6, 9, 19, 22)

SYMBOL	PARAMETER	CONDITIONS	MIN	TYP	MAX	UNITS
BW_{IF}	IF Output Bandwidth	–1dB Corner Frequency (Note 20)		1.0		GHz
Serial Interface Pins						
V_{IH}	High Level Input Voltage	CSB, SDI, SCK	0.7 • OV_{DD}			V
V_{IL}	Low Level Input Voltage	CSB, SDI, SCK			0.3 • OV_{DD}	V
V_{IHYS}	Input Hysteresis Voltage	CSB, SDI, SCK		250		mV
$I_{IN(SER)}$	Input Current	CSB, SDI, SCK (Note 17)			30	µA
V_{OH}	High Level Output Voltage	SDO, 10mA Current Sink	0.7 • OV_{DD}			V
V_{OL}	Low Level Output Voltage	SDO, 10mA Current Source			0.3 • OV_{DD}	V
Serial Interface Timing						
t_{CKH}	SCK High Time		25			ns
t_{CKL}	SCK Low Time		25			ns
t_{CSS}	CSB Setup Time		10			ns
t_{CSH}	CSB High Time		10			ns
t_{DS}	SDI to SCK Setup Time		6			ns
t_{DH}	SDI to SCK Hold Time		6			ns
t_{DO}	SCK to SDO Time	To V_{IH}/V_{IL}/Hi-Z with 30pF Load			16	ns

Note 1: Stresses beyond those listed under Absolute Maximum Ratings may cause permanent damage to the device. Exposure to any Absolute Maximum Rating condition for extended periods may affect device reliability and lifetime. The voltage on all pins should not exceed V_{CC} + 0.3V or be less than –0.3V, otherwise damage to the ESD diodes may occur.

Note 2: Tests are performed with the test circuit of Figure 1.

Note 3: The LTC5586 is guaranteed to be functional over the –40°C to 105°C case temperature operating range.

Note 4: DSB noise figure is measured at the baseband frequency of 15MHz with a small-signal noise source without any filtering on the RF input and no other RF signal applied.

Note 5: A 4.7pF shunt capacitor is used on the RF inputs for 300MHz to 500MHz. 0.3pF is used for 500MHz to 6GHz.

Note 6: The differential amplifier outputs (IFIP, IFIM and IFQP, IFQM) are combined using a 180° combiner.

Note 7: Noise figure under blocking conditions ($NF_{BLOCKING}$) is measured at an output frequency of 60MHz with RF input signal at f_{LO} + 1MHz. Both RF and LO input signals are appropriately filtered, as well as the baseband output.

Note 8: Power conversion gain is defined from the RFA (or RFB) input to the I or Q output. Power conversion gain is measured with a 100Ω differential load impedance on the I and Q outputs. Any losses due to IF combiner and spectrum analyzer termination have been de-embedded.

Note 9: Input P_{RF} adjusted so that P_{IF} = –1.5dBm/tone at the amplifier output. RF tone spacing set at 4MHz with high-side LO, f_{LO} = f_{RF} + 30MHz.

Note 10: Image rejection is measured at f_{IF} = 12MHz and calculated from the measured gain error and phase error.

Note 11: If the VCM pin is left floating, it will self bias to a nominal 0.9V.

Note 12: This is the recommended operating range, operation outside the listed range is possible with degraded performance to some parameters.

Note 13: DC offset measured differentially between IFIP and IFIM and between IFQP and IFQM. The reported value is the mean of the absolute values of the characterization data distribution.

Note 14: IF outputs shorted to ground.

Note 15: IF tone spacing set at 1MHz.

Note 16: Worst case leakage or isolation measured to each IF single-ended port.

Note 17: Guaranteed by design characterization, not tested in production.

Note 18: The voltage on the OVDD pin must never exceed V_{CC} + 0.3V, otherwise damage to the ESD diodes may occur.

Note 19: Refer to Appendix for register definition and default values.

Note 20: Mixer outputs directly connected to amplifier inputs. Bandwidth measured on single amplifier output, I or Q.

Note 21: V_{CC} should be ramped up slower than 5V/ms to prevent damage.

Note 22: P_{IF} measured at amplifier differential outputs.

TYPICAL PERFORMANCE CHARACTERISTICS

$V_{CC} = V_{CCN} = 5V$, $T_C = 25°C$, $P_{LO} = 6dBm$, HSLO, RF tone spacing = 4MHz, $f_{IF} = 30MHz$, $P_{IF} = –1.5dBm$ per tone, and register defaults. DC Blocks, 50Ω terminations, and MACOM H9 180° combiner at amplifier outputs de-embedded from measurement unless otherwise noted. Test circuit shown in Figure 1 with 500MHz interstage filter.

Supply Current vs Supply Voltage

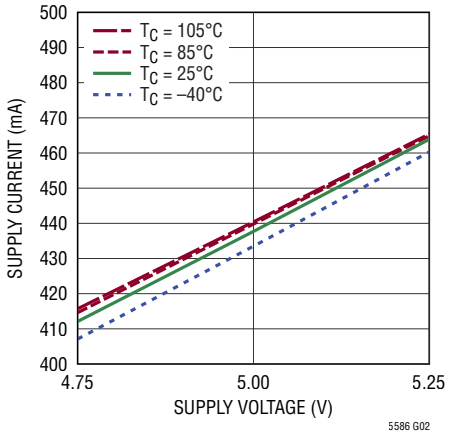

TEMP Diode Voltage vs Temperature (T_C)

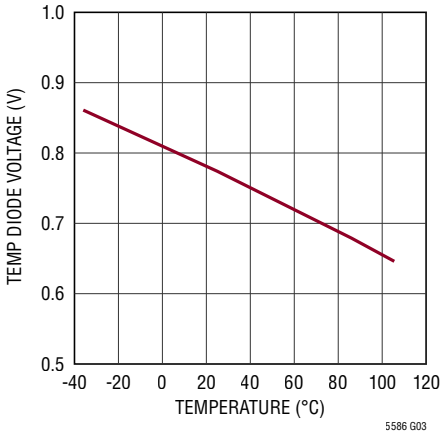

Noise Figure and Conversion Gain vs Temperature (T_C)

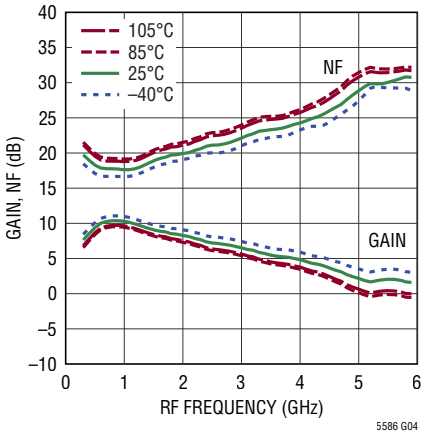

Noise Figure and Conversion Gain vs LO Power

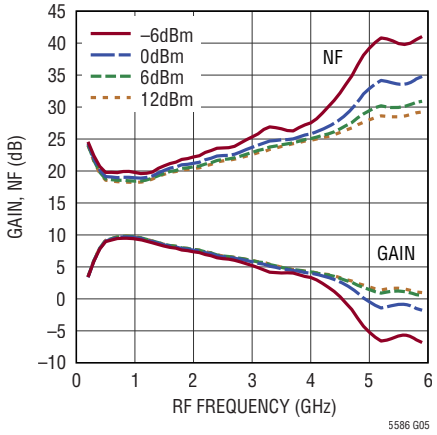

Conversion Gain vs ATT Setting

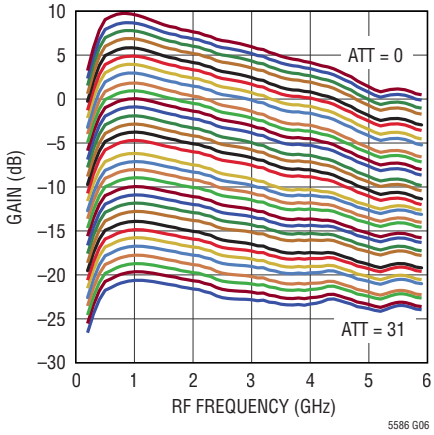

Gain vs IF Frequency for Various Fixed LO Frequencies

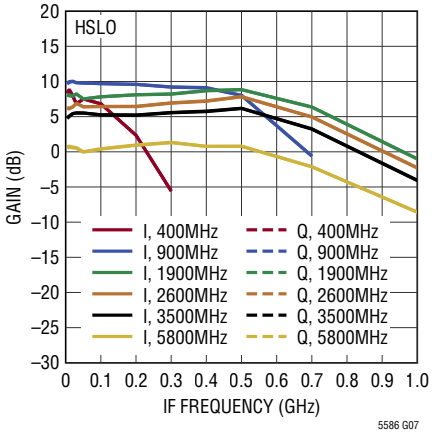

Gain vs IF Frequency for Various Fixed LO Frequencies

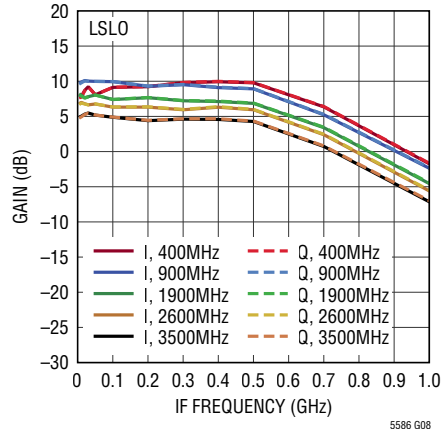

Gain vs AMPG Register Value

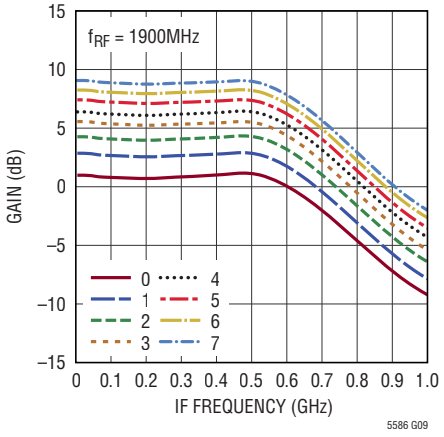

Noise Figure vs ATT Setting

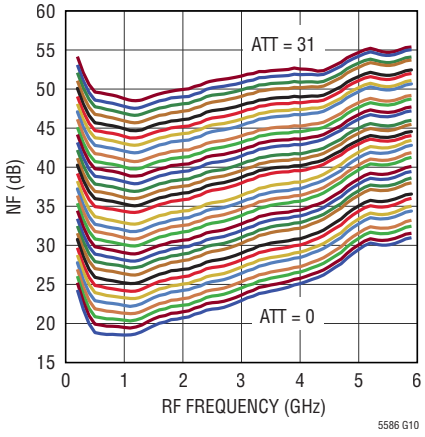

TYPICAL PERFORMANCE CHARACTERISTICS

V_{CC} = V_{CCN} = 5V, T_C = 25°C, P_{LO} = 6dBm, HSLO, RF tone spacing = 4MHz, f_{IF} = 30MHz, P_{IF} = –1.5dBm per tone, and register defaults. DC Blocks, 50Ω terminations, and MACOM H9 180° combiner at amplifier outputs de-embedded from measurement unless otherwise noted. Test circuit shown in Figure 1 with 500MHz interstage filter.

RFA to RFB Isolation vs RFSW

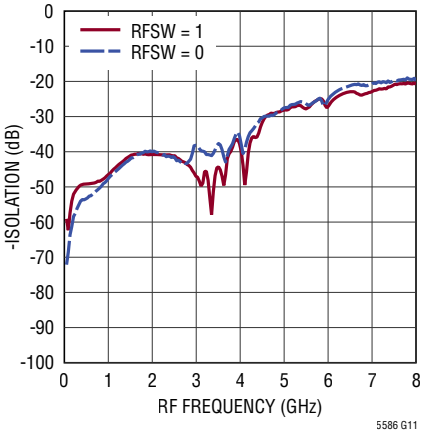

Output Referred P1dB

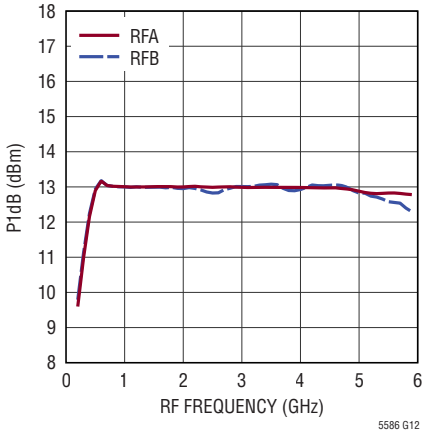

OIP3 vs IF Frequency

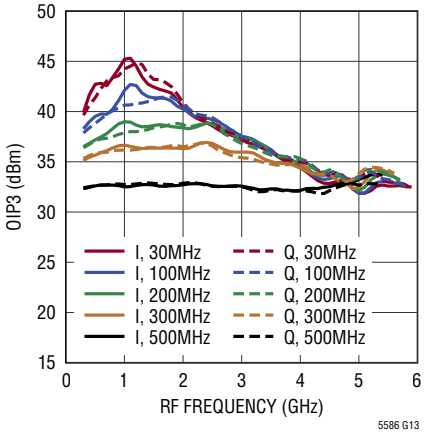

OIP3 vs IF Frequency for LSLO

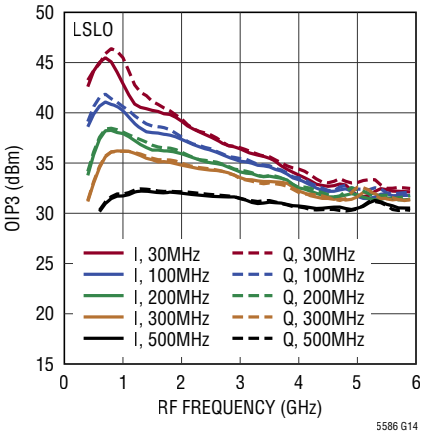

OIP3 vs Temperature (T_C)

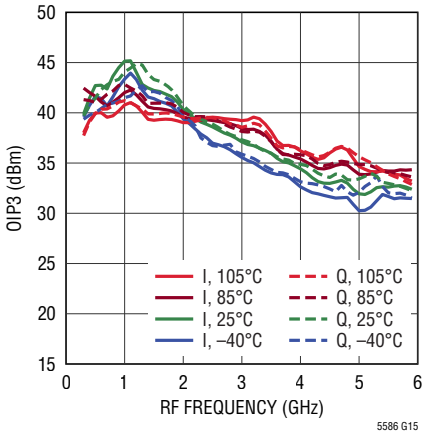

OIP3 vs Supply Voltage (V_{CC})

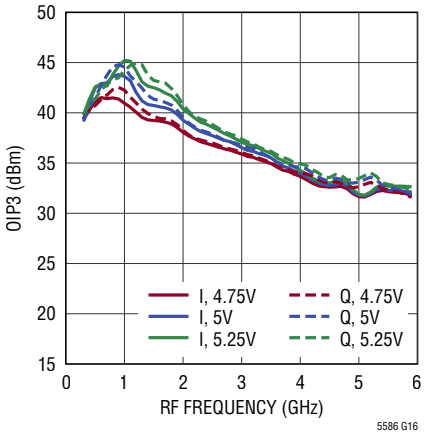

OIP3 vs LO Power

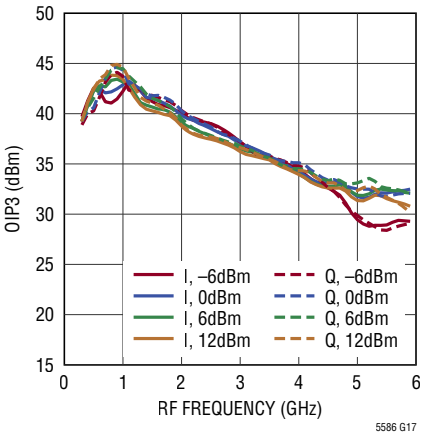

OIP3 vs IF Tone Power

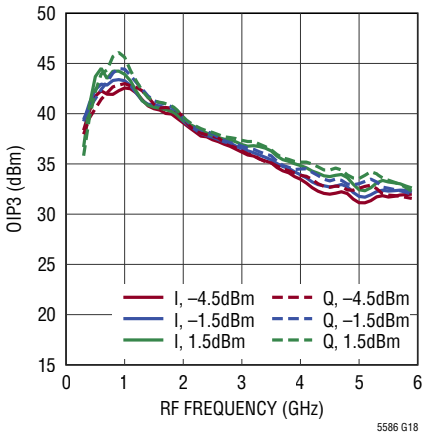

Optimized OIP3 vs Temperature (T_C)

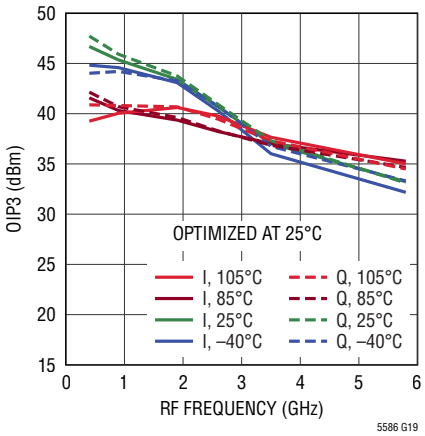

TYPICAL PERFORMANCE CHARACTERISTICS

V_{CC} = V_{CCN} = 5V, T_C = 25°C, P_{LO} = 6dBm, HSLO, RF tone spacing = 4MHz, f_{IF} = 30MHz, P_{IF} = –1.5dBm per tone, and register defaults. DC Blocks, 50Ω terminations, and MACOM H9 180° combiner at amplifier outputs de-embedded from measurement unless otherwise noted. Test circuit shown in Figure 1 with 500MHz interstage filter.

OIP3 vs Temperature (T_C) and Register Value, I-Channel

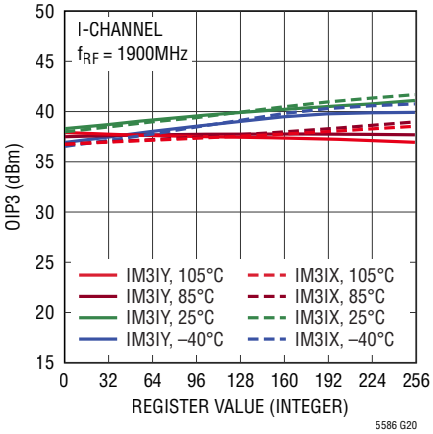

OIP3 vs Temperature (T_C) and Register Value, Q-Channel

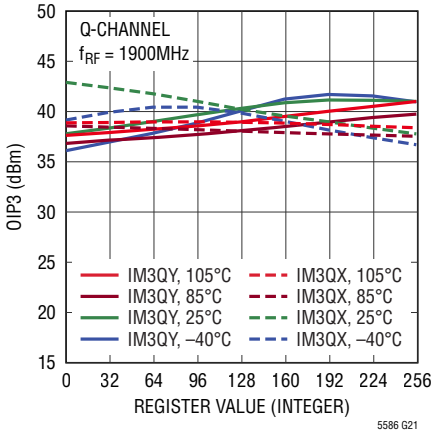

OIP3 vs IP3CC Register Value

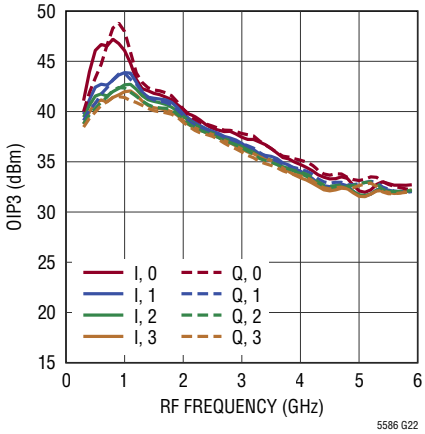

OIP3 vs IP3IC Register Value

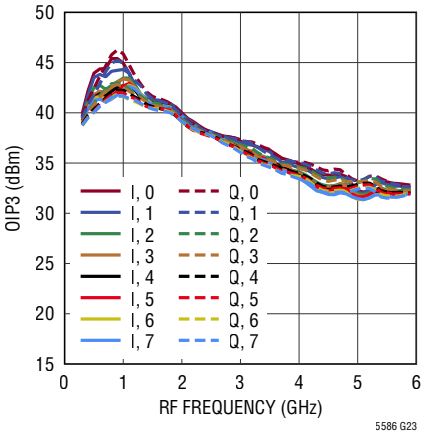

OIP3 vs LVCM Register Value

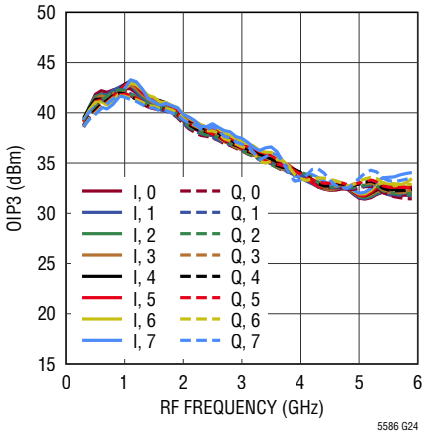

OIP2 vs Temperature (T_C)

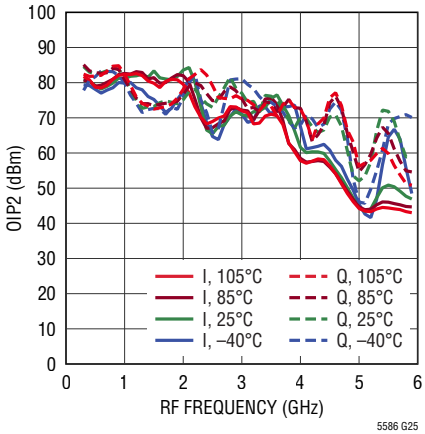

OIP2 vs LO Power

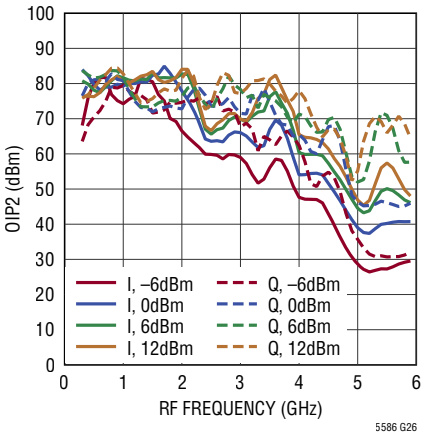

Optimized OIP2 vs Temperature (T_C)

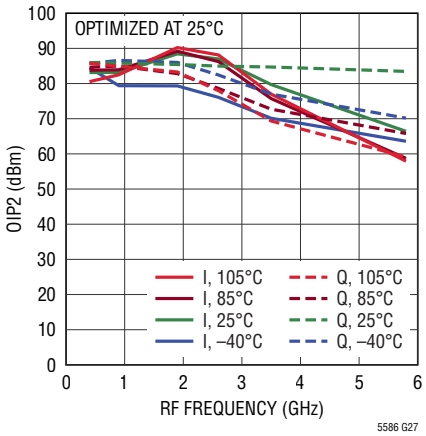

OIP2 vs Temperature (T_C) and Register Value, I-Channel

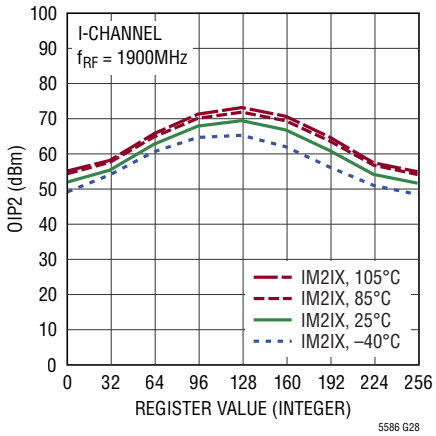

TYPICAL PERFORMANCE CHARACTERISTICS

V_{CC} = V_{CCN} = 5V, T_C = 25°C, P_{LO} = 6dBm, HSLO, RF tone spacing = 4MHz, f_{IF} = 30MHz, P_{IF} = –1.5dBm per tone, and register defaults. DC Blocks, 50Ω terminations, and MACOM H9 180° combiner at amplifier outputs de-embedded from measurement unless otherwise noted. Test circuit shown in Figure 1 with 500MHz interstage filter.

OIP2 vs Temperature (T_C) and Register Value, Q-Channel

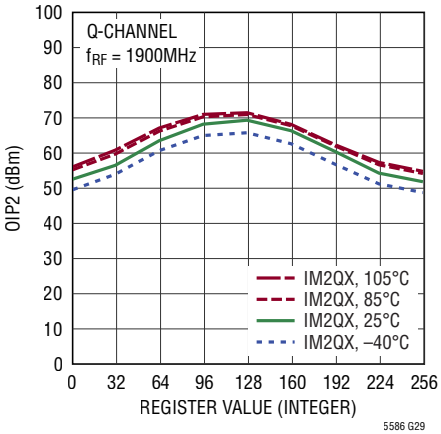

HD2 vs Temperature (T_C)

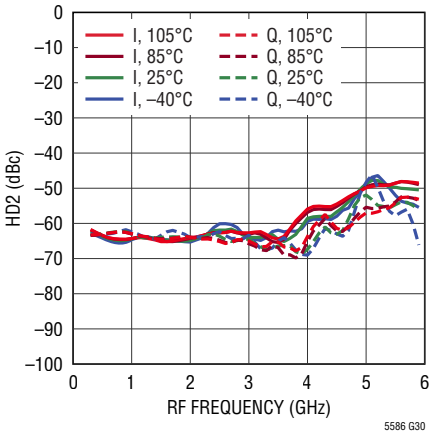

HD2 vs LO Power

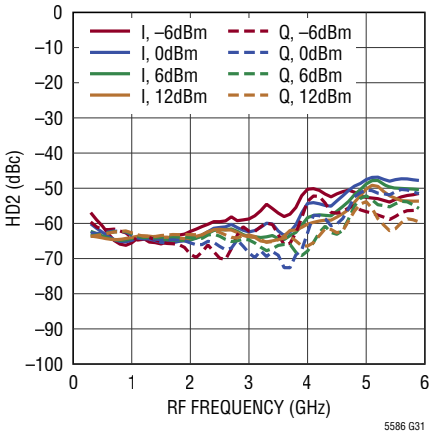

Optimized HD2 vs Temperature (T_C)

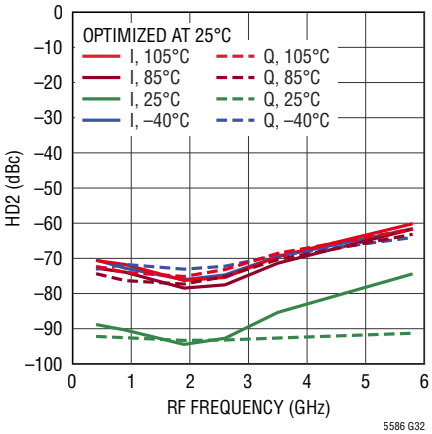

HD2 vs Temperature (T_C) and Register Value, I-Channel

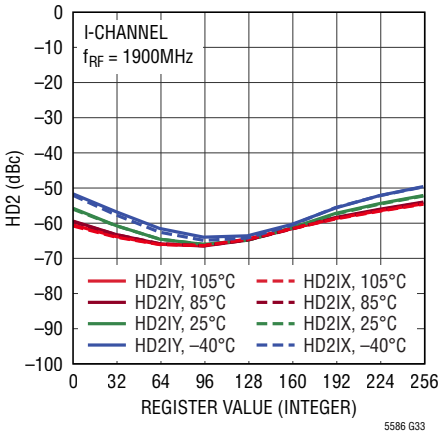

HD2 vs Temperature (T_C) and Register Value, Q-Channel

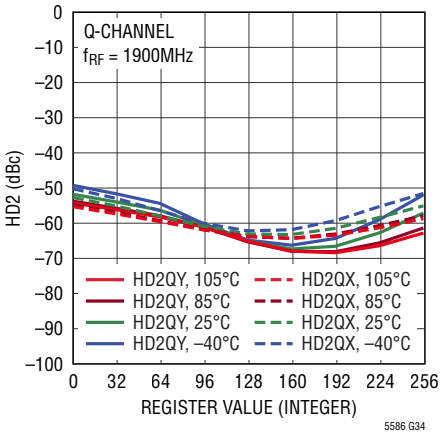

HD3 vs Temperature (T_C)

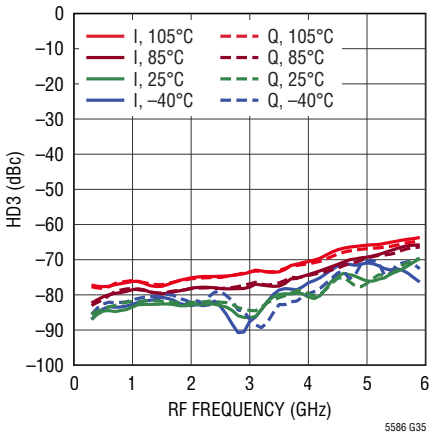

HD3 vs LO Power

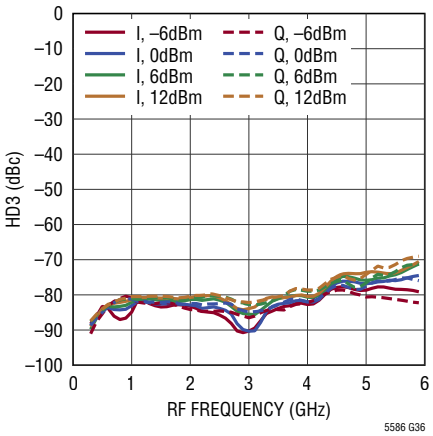

Optimized HD3 vs Temperature (T_C)

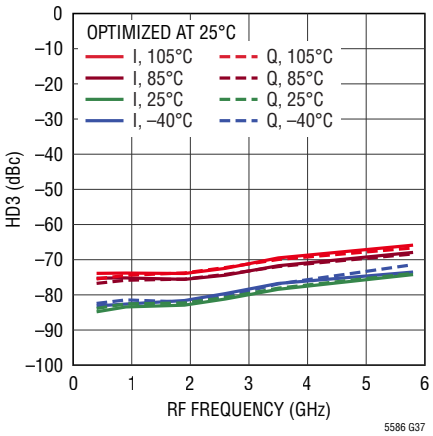

TYPICAL PERFORMANCE CHARACTERISTICS

V_{CC} = V_{CCN} = 5V, T_C = 25°C, P_{LO} = 6dBm, HSLO, RF tone spacing = 4MHz, f_{IF} = 30MHz, P_{IF} = –1.5dBm per tone, and register defaults. DC Blocks, 50Ω terminations, and MACOM H9 180° combiner at amplifier outputs de-embedded from measurement unless otherwise noted. Test circuit shown in Figure 1 with 500MHz interstage filter.

HD3 vs Temperature (T_C) and Register Value, I-Channel

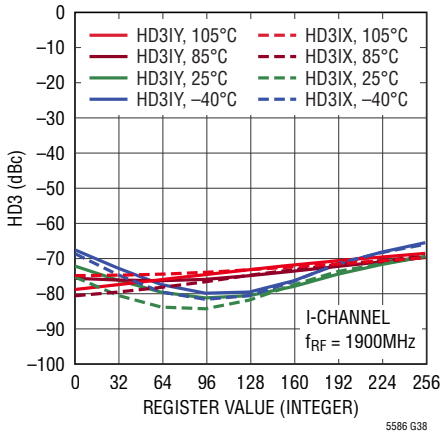

HD3 vs Temperature (T_C) and Register Value, Q-Channel

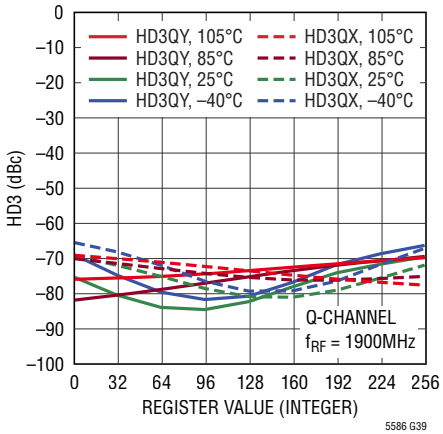

Image Rejection vs Temperature (T_C)

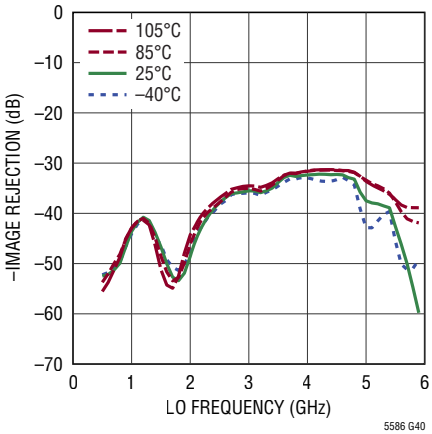

Optimized Image Rejection vs Temperature (T_C)

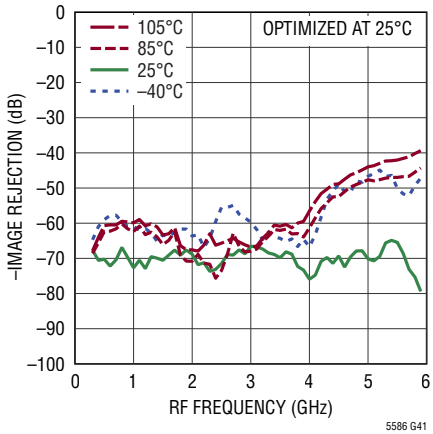

Gain Error vs Temperature (T_C) and GERR Register Value

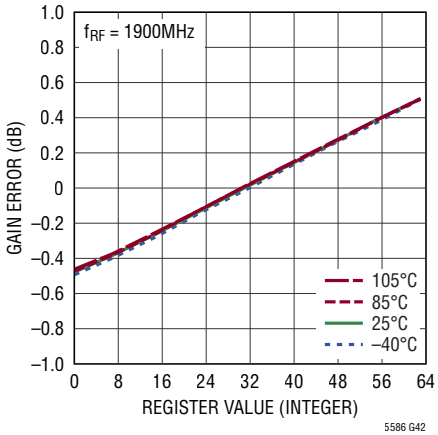

Phase Error vs Temperature (T_C) and PHA Register Value

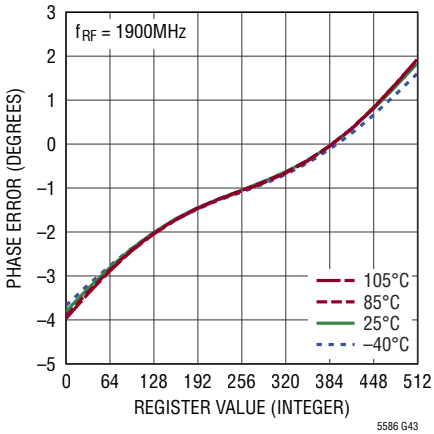

DC Offset vs Temperature (T_C)

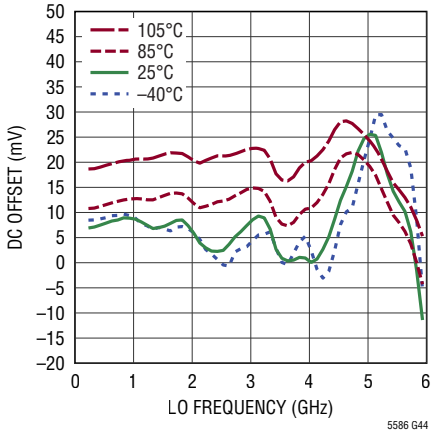

DC Offset vs LO Power

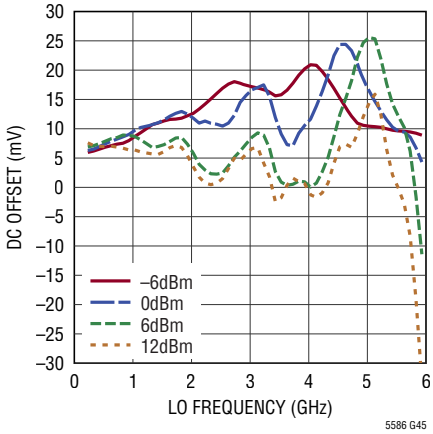

Optimized DC Offset vs Temperature (T_C)

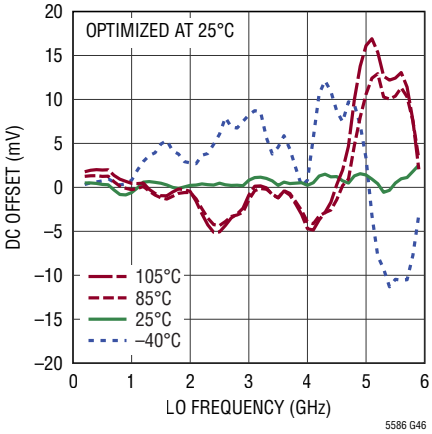

TYPICAL PERFORMANCE CHARACTERISTICS

$V_{CC} = V_{CCN} = 5V$, $T_C = 25°C$, $P_{LO} = 6dBm$, HSLO, RF tone spacing = 4MHz, $f_{IF} = 30MHz$, $P_{IF} = –1.5dBm$ per tone, and register defaults. DC Blocks, 50Ω terminations, and MACOM H9 180° combiner at amplifier outputs de-embedded from measurement unless otherwise noted. Test circuit shown in Figure 1 with 500MHz interstage filter.

DC Offset vs Temperature (T_C) and Register Value

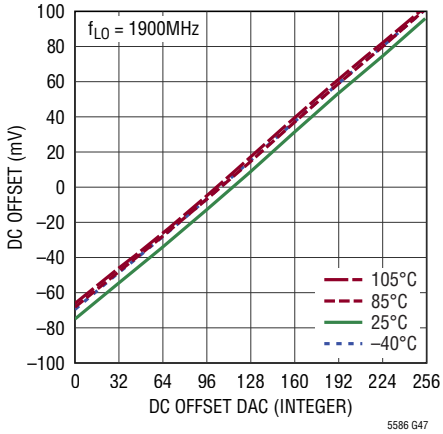

Blocking Noise Figure vs LO Power

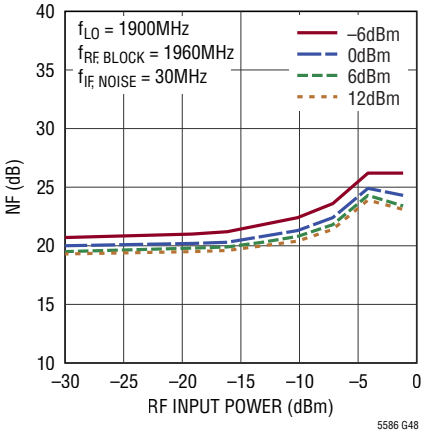

RFSW Transient Response

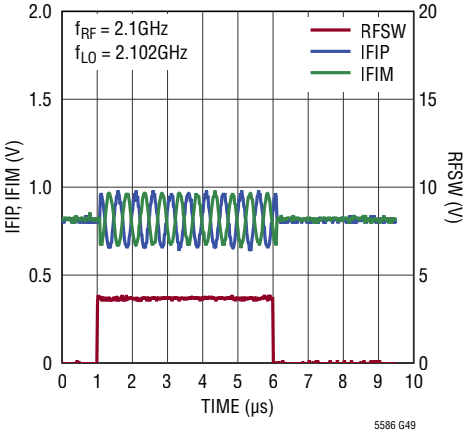

Gain, IIP3 and IIP2 for Mixer Only

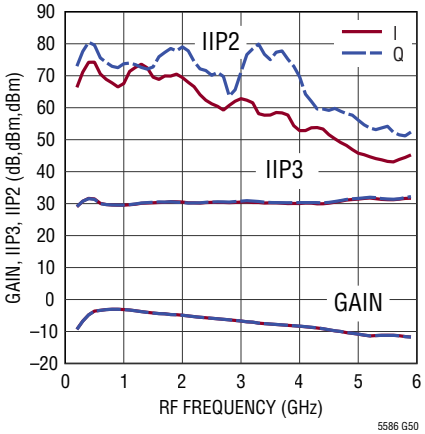

RF to LO Isolation

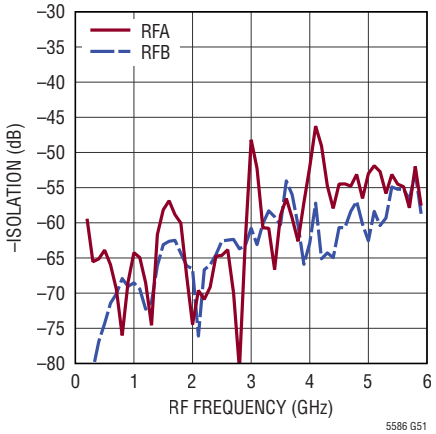

LO to RF Leakage

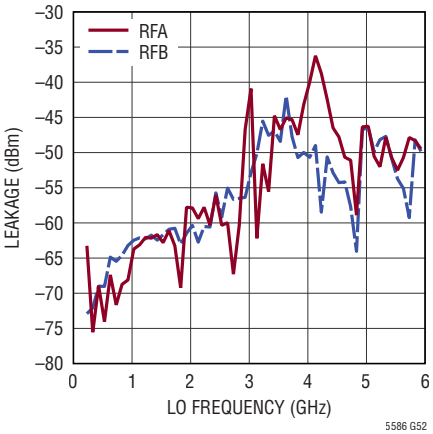

RF to IF Isolation

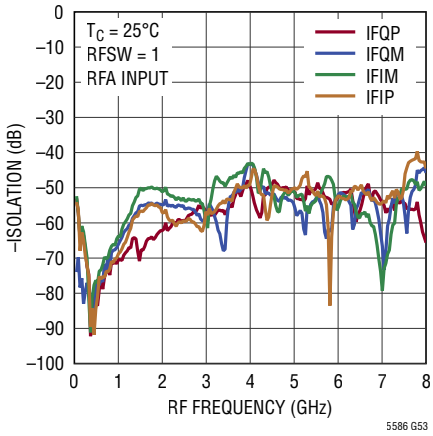

LO to IF Isolation

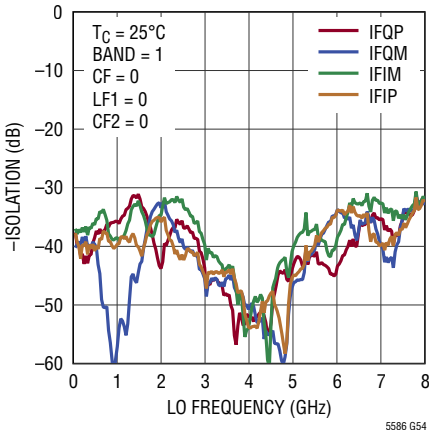

TYPICAL PERFORMANCE CHARACTERISTICS

V_{CC} = V_{CCN} = 5V, T_C = 25°C, P_{LO} = 6dBm, HSLO, RF tone spacing = 4MHz, f_{IF} = 30MHz, P_{IF} = –1.5dBm per tone, and register defaults. DC Blocks, 50Ω terminations, and MACOM H9 180° combiner at amplifier outputs de-embedded from measurement unless otherwise noted. Test circuit shown in Figure 1 with 500MHz interstage filter.

OIP3 Distribution vs Temperature (T_C)

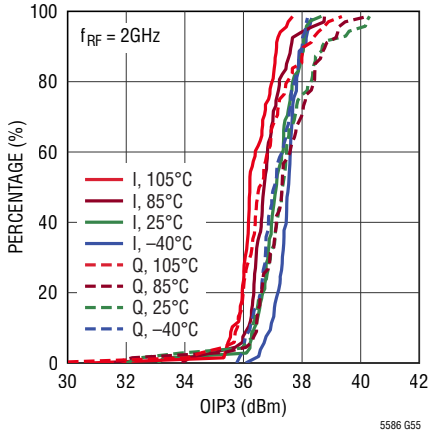

OIP2 Distribution vs Temperature (T_C)

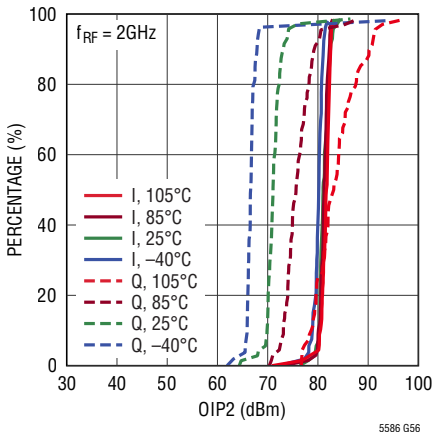

Conversion Gain Distribution vs Temperature (T_C)

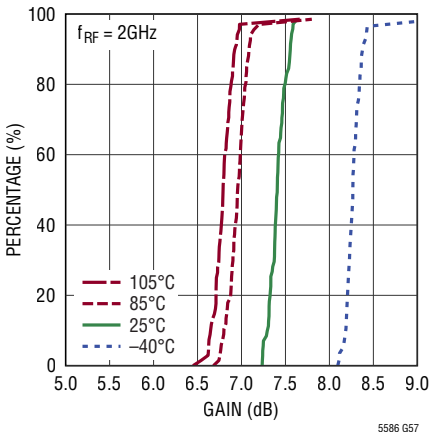

Noise Figure Distribution vs Temperature (T_C)

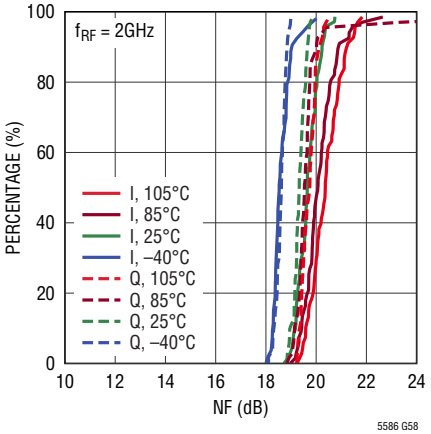

Gain Error Distribution vs Temperature (T_C)

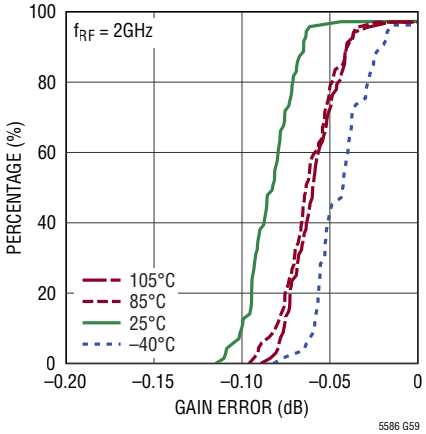

Phase Error Distribution vs Temperature (T_C)

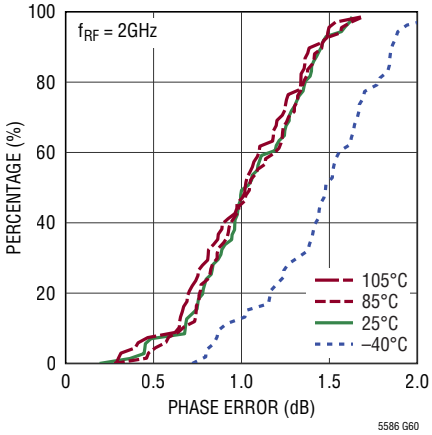

Image Rejection Distribution vs Temperature (T_C)

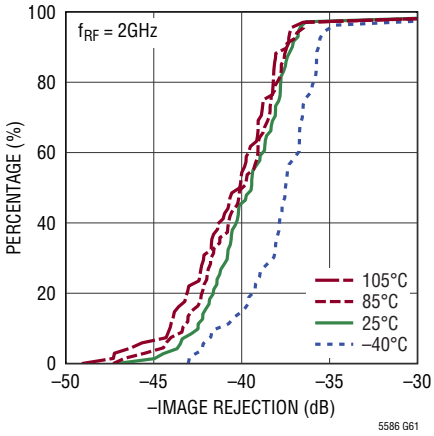

Optimized Image Rejection vs IF Frequency

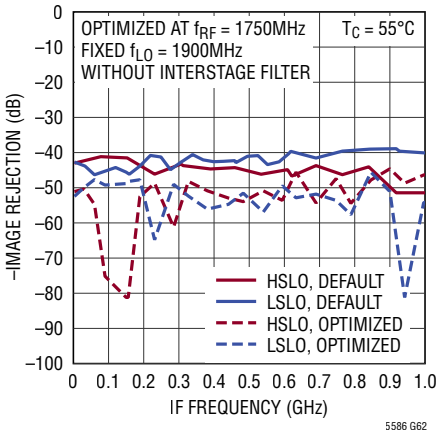

PIN FUNCTIONS

RFA (Pin 2): 50Ω switched RF input. The pin should be DC-blocked with coupling capacitor; 1000pF is recommended.

TEMP (Pin 3): Temperature monitoring diode. The diode to ground at this pin can be used to measure the die temperature. A forward bias current of 100μA can be used into this pin and the forward voltage drop can be measured as a function of die temperature.

RFSW (Pin 4): RF channel select. The state of the RF switch is the logical AND of the RFSW pin and the RFSW register value. (See Appendix). This pin should not be left floating. Either tie high or low.

VCCN (Pin 5): Positive Supply Pin. This pin must be tied to the VCC pin.

VCM (Pin 6): IF amplifier common-mode output voltage adjust. Source resistance should be 1kΩ or lower. If this pin is left unconnected, it will internally self-bias to 0.9V.

RFB (Pin 7): 50Ω switched RF input. The pin should be DC-blocked with coupling capacitor; 1000pF is recommended.

MQP, MQM, MIM, MIP (Pins 9, 10, 31, 32): Mixer differential output pins. When connected to the amplifier input pins, the DC bias point is V_{CC} – 1.4V for each pin. A low-pass filter is typically used between the MQM(P) or MIM(P) pins and the AQM(P) or AIM(P) pins to suppress the high frequency mixing products. See the Applications section for more information.

DNC (Pins 11, 14, 27, 30): DO NOT CONNECT. No connection should be made to these pins.

AQM, AQP, AIP, AIM (Pins 12, 13, 28, 29): Amplifier differential input pins. When connected to the mixer output pins, the DC bias point is V_{CC} – 1.4V for each pin. A low-pass filter is typically used between the AQM(P) or AIM(P) pins and the MQM(P) or MIM(P) pins to suppress the high frequency mixing products. See the Applications section for more information.

IFQM, IFQP, IFIP, IFIM (Pins 15, 16, 25, 26): IF amplifier output pins. The current used by the output amplifiers is set by a resistance of 25Ω to 200Ω from each pin to ground and the VCM control voltage.

CSB (Pin 17): Chip Select Bar. When CSB is low, the serial interface is enabled. It can be driven with 1.2V to 3.3V logic levels.

VCC (Pin 18): Positive supply pin. This pin should be bypassed with a 1000pF and 4.7μF capacitor to ground.

LOP, LOM (Pins 19, 20): LO inputs. External matching is not needed. Can be driven 50Ω single-ended or 100Ω differentially. The LO pins should be DC-blocked with coupling capacitor; 1000pF is recommended. When driven single-ended, the unused pin should be terminated with 50Ω in series with the DC-blocking capacitor.

SDO (Pin 21): Serial Data Output. This output can accommodate logic levels from 1.2V to 3.3V. During read-mode, data is read out MSB first.

SDI (Pins 22): Serial Data Input. Data is clocked MSB first into the mode-control registers on the rising edge of SCK. SDI can be driven with 1.2V to 3.3V logic levels.

SCK (Pin 23): Serial Clock Input. SDI can be driven with 1.2V to 3.3V logic levels.

OVDD (Pin 24): Positive digital interface supply pin. This pin sets the logic levels for the digital interface. 1.2V to 3.3V can be used. This pin should be bypassed with a 1μF capacitor to ground. The VCC supply must be applied before the OVDD supply to prevent damage to the ESD diodes.

GND (Pins 1, 8, Exposed Pad Pin 33): Ground. These pins must be soldered to the circuit board RF ground plane. The backside exposed pad ground connection should have a low-inductance connection and good thermal contact to the printed circuit board ground plane using many through-hole vias. See layout information.

BLOCK DIAGRAM

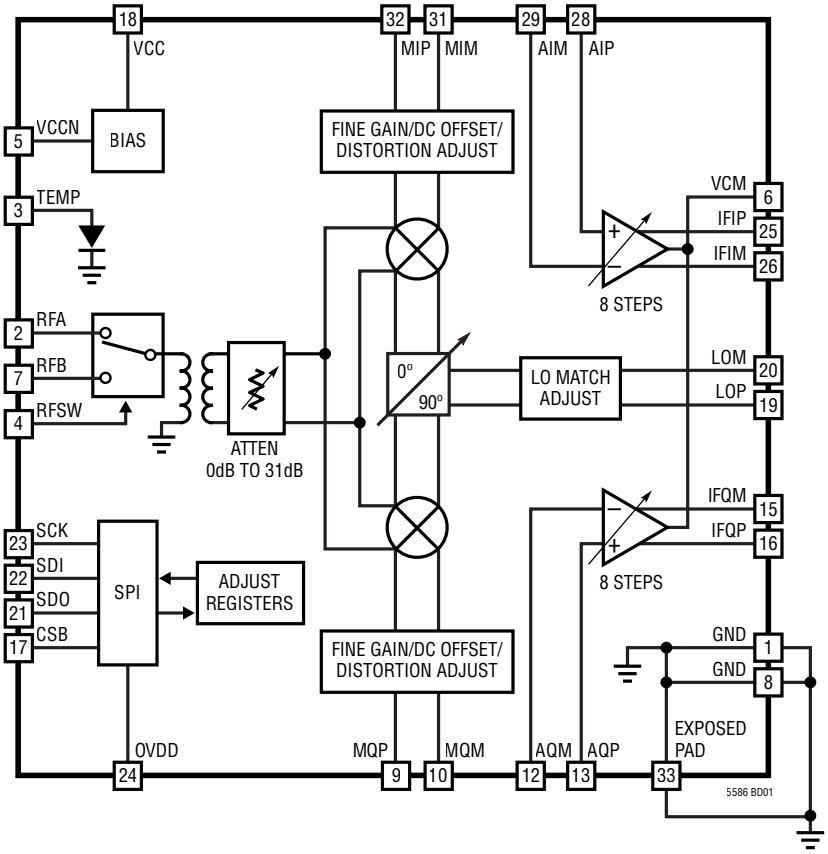

TIMING DIAGRAMS

SPI Port Timing (Readback Mode)

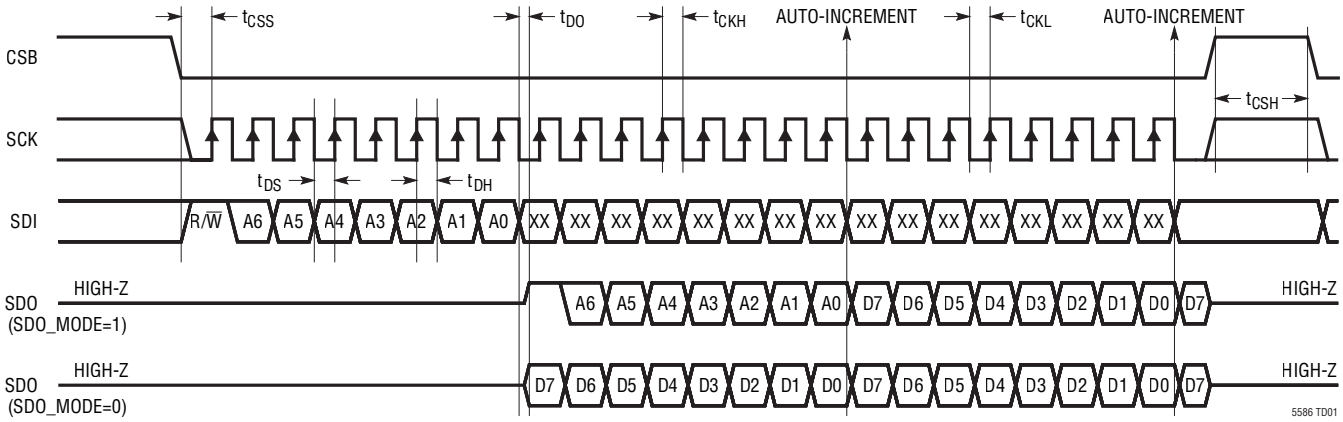

SPI Port Timing (Write Mode)

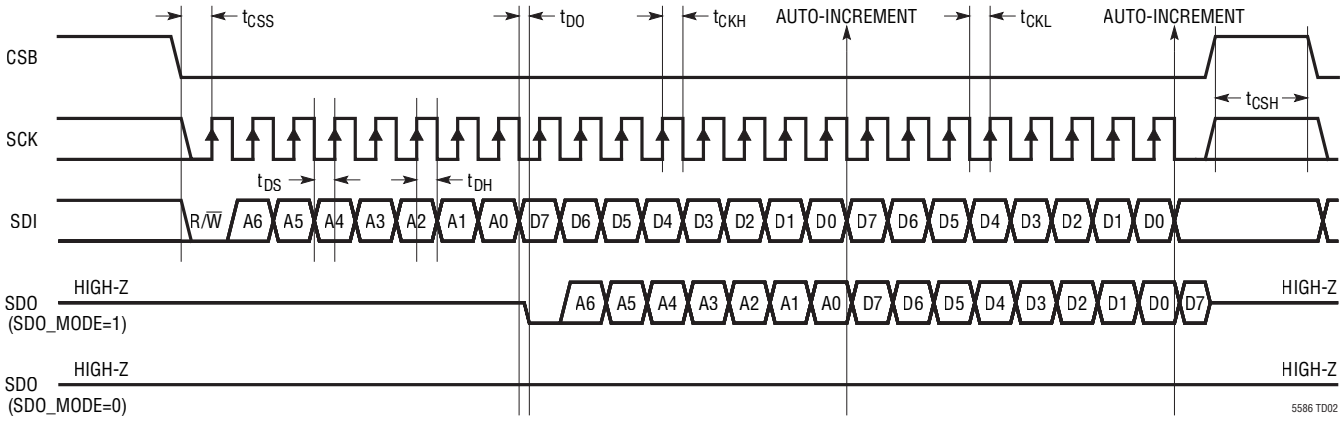

TEST CIRCUIT

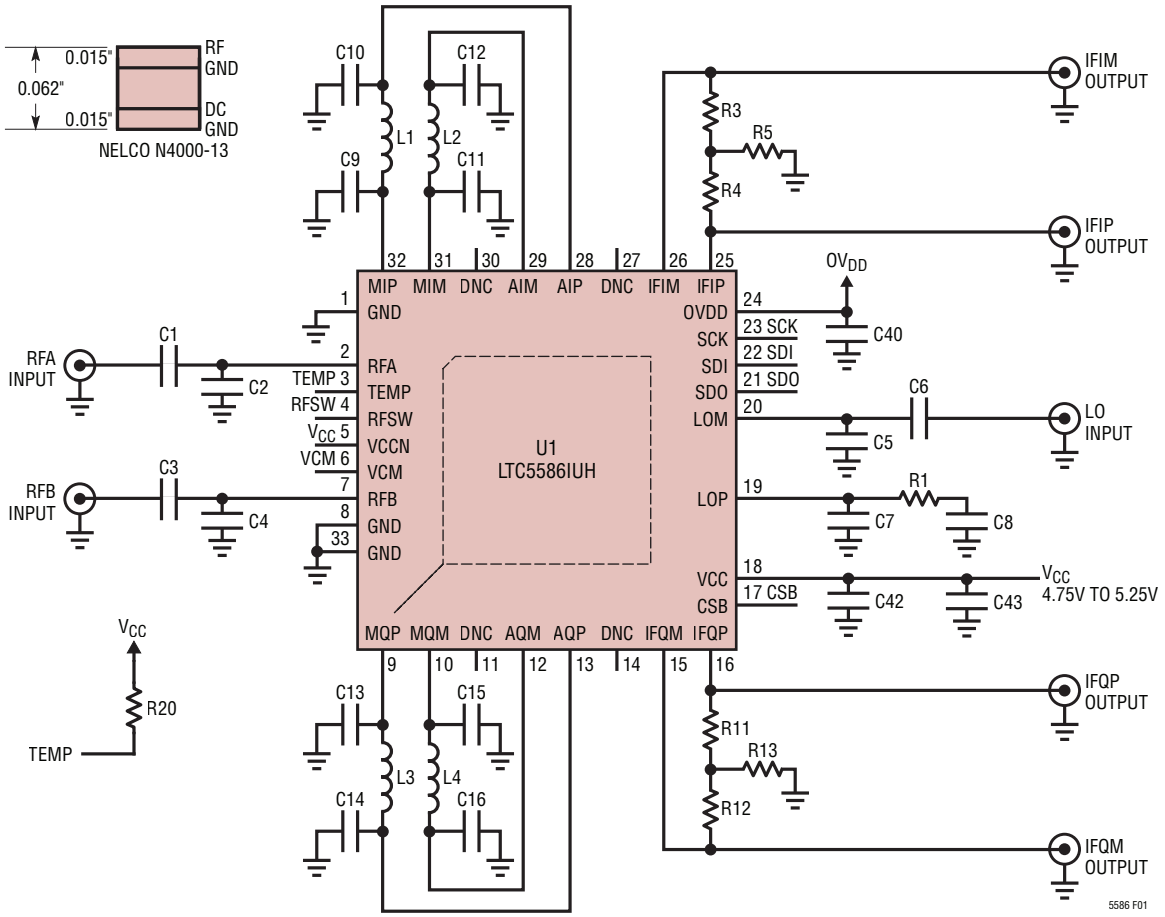

REF DES	VALUE	SIZE	VENDOR	REF DES	VALUE	SIZE	VENDOR
C1, C3, C6, C8, C42	1000pF	0402	Murata	L1-L4	22nH	0805	Coilcraft
C2, C4, C5, C7	0.3pF	0402	Murata	R1, R3, R4, R11, R12	49.9Ω	0402	
C9-C16	3.0pF	0201	Murata	R5, R13	0Ω	0402	
C40	1µF	0603	Murata	R20	40.2kΩ	0402	
C43	4.7µF	0805	Murata				

Figure 1. Test Circuit Schematic

TEST CIRCUIT

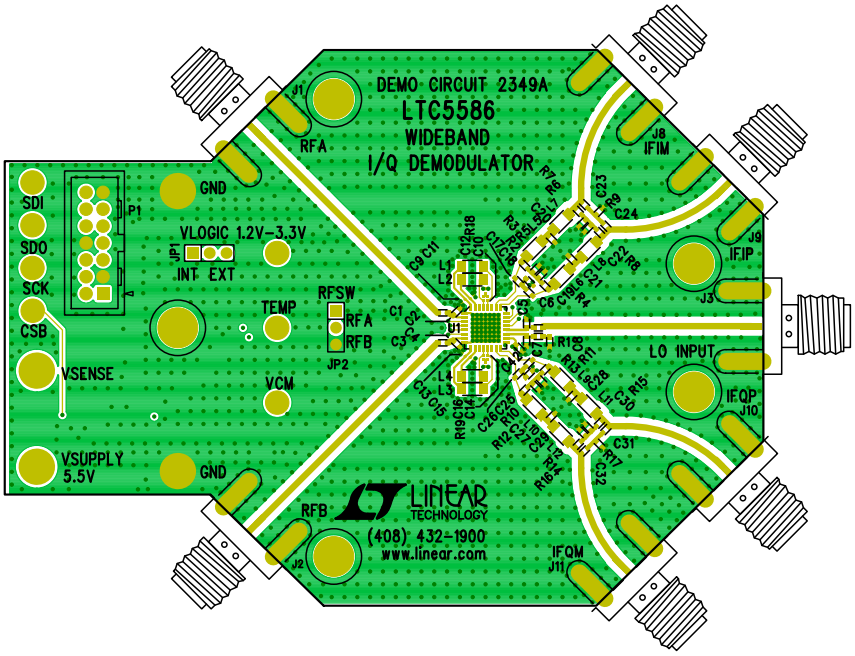

Figure 2. Component Side of Evaluation Board

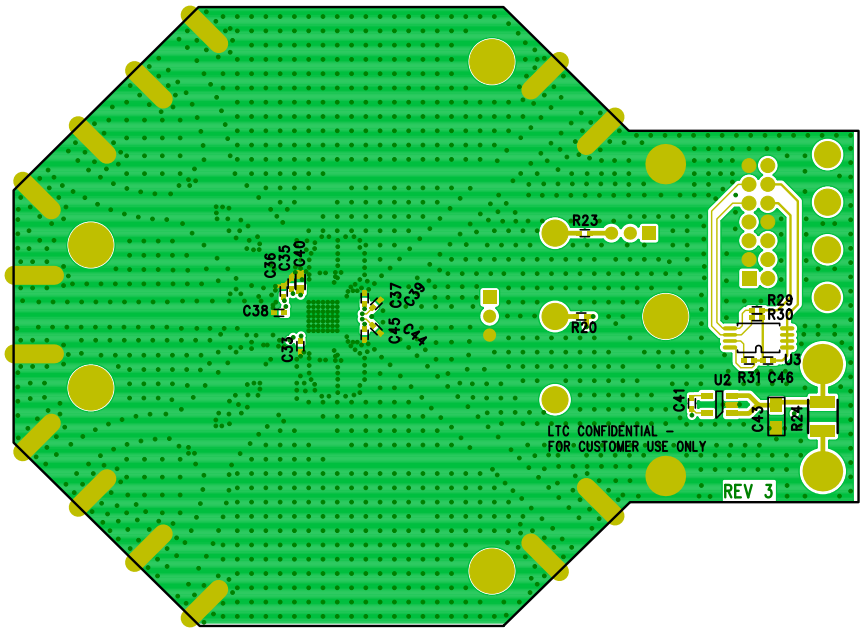

Figure 3. Bottom Side of Evaluation Board

APPLICATIONS INFORMATION

The LTC5586 is an IQ demodulator designed for high dynamic range receiver applications. It consists of RF switches, a step attenuator, I/Q mixers, quadrature LO amplifiers, IF amplifiers, and correction circuitry for DC offset, image rejection, and non-linearity.

Operation

As shown in the Block Diagram for the LTC5586, the RF inputs, RFA and RFB, are selected by an internal switch. The RF signal is then converted to a differential signal by the on-chip balun transformer covering the 300MHz to 6GHz band. A differential 0 to 31dB step attenuator then scales the RF input level to the I and Q channel mixers.

The LO inputs are impedance matched using a programmable network, and then accurately shifted in phase by 90° by an internal precision phase shifter. This phase shifter maintains the accurate quadrature relation over the full LO input range from 300MHz to 6GHz. In addition, the phase shifter allows fine tuning of the phase difference between the I- and Q-channel LO with a resolution of around 0.05 degrees to compensate for any phase mismatch between the mixers and phase mismatch introduced into the IF path by any filter component mismatch.

The differential mixer IF output signals are filtered off-chip to remove the $f_{RF} + f_{LO}$ signal and other high frequency mixing products before being applied to the on-chip IF amplifiers. The IF amplifiers have adjustable gain and common-mode output voltage to allow for direct interfacing with A/D converters. The gain balance between both IF output channels of the LTC5586 can be fine tuned with a resolution of about 0.016dB in order to compensate for gain mismatches in the IF signal path, either caused internally by the device or by external amplifiers and filters. The DC offset in both IF channels can be adjusted in order to minimize the accumulated DC offset at the A/D converter input.

The RF switch state, attenuation, IF gain, gain error and phase error adjust, DC offset adjust, and non-linearity adjust registers are digitally controlled through a 4-wire SPI interface. The register map is detailed in the Appendix.

RF Input Ports

Figure 4 shows a simplified schematic of the demodulator's RF inputs (the RFA input is identical to RFB input) which consist of an RF switch, balun transformer, and step-attenuator. External DC voltage should not be applied to the RF input pins. DC current flowing into the pins may cause damage to the chip. Series DC blocking capacitors should be used to couple the RF input pins to the RF signal sources. The RF switch can be selected by the RFSW pin, and by the RFSW register 0x17 bit[0]. The RFA input is selected when the logical AND of the value of RFSW in register 0x17 and the logic level of the RFSW pin is 1 (see digital input pins section and register map). The switch state is detailed in Table 1.

Table 1. RF Switch State vs Logic Levels

RFSW Register	RFSW Pin 0	RFSW Pin 1
0	RFB	RFB
1	RFB	RFA

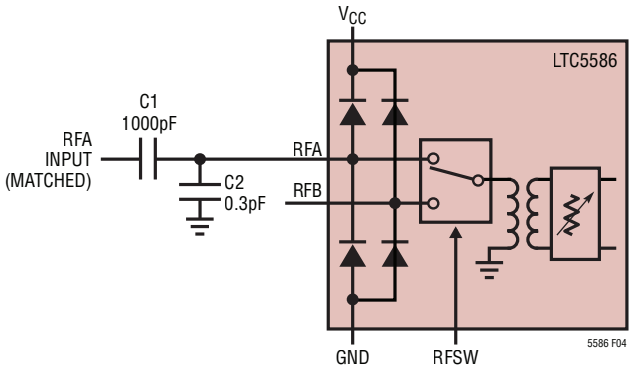

Figure 4. Simplified Schematic of the RF Input with External Matching Components

APPLICATIONS INFORMATION

As shown in Figure 5, the RF input ports are well matched with return loss greater than 10dB over the frequency range of 500MHz to 6GHz with a 0.3pF capacitor on C2. The RF pins can be externally matched over the 300MHz to 500MHz frequency range by changing C2 to 4.7pF. Figure 6 shows the RF input return loss with C2 set to 4.7pF. Table 2 shows the impedance and input reflection coefficient for the RF input with C2 = 0.3pF. The input transmission line length is de-embedded from the measurement.

Table 2. RF Input Impedance

FREQUENCY (MHz)	INPUT IMPEDANCE (Ω)	S11	
		MAG	ANGLE (°)
300	24.9 + j27.6	0.468	112.0
400	39.1 + j37.3	0.403	83.5
500	60.1 + j36.9	0.330	56.2
700	77.4 – j1.9	0.215	–3.2
1000	43.7 – j19.2	0.211	–96.7
1500	27.2 – j2.1	0.297	–173.2
2000	29.6 + j14.5	0.310	134.4
2500	39.3 + j26.0	0.303	96.0
3000	48.9 + j23.1	0.228	79.9
3500	52.4 + j19.2	0.185	72.3
4000	60.5 + j8.2	0.120	33.8
4500	69.2 + j15.0	0.202	30.8
5000	82.4 + j11.5	0.259	14.6
5500	71.2 – j8.6	0.188	–18.0
6000	46.8 – j13.1	0.138	–96.1

LO Input Port

The demodulator's LO input interface is shown in Figure 7. The input consists of a programmable input match and a high precision quadrature phase shifter which generates 0° and 90° phase shifted LO signals for the LO buffer amplifiers to drive the I/Q mixers. DC blocking capacitors are required on the LOP and LOM inputs. When using a

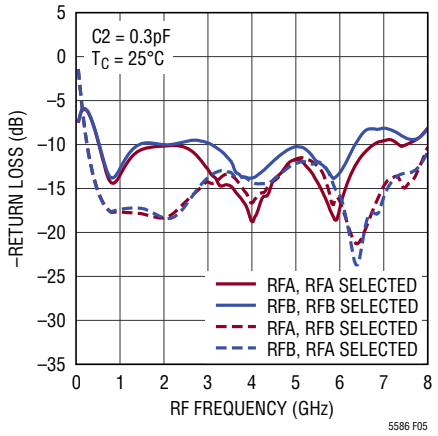

Figure 5. RF Input Return Loss

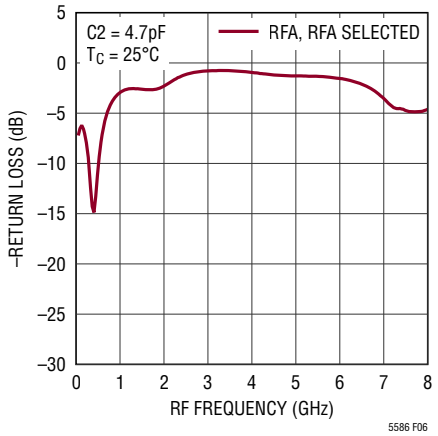

Figure 6. RF Input Return Loss with C2 = 4.7pF

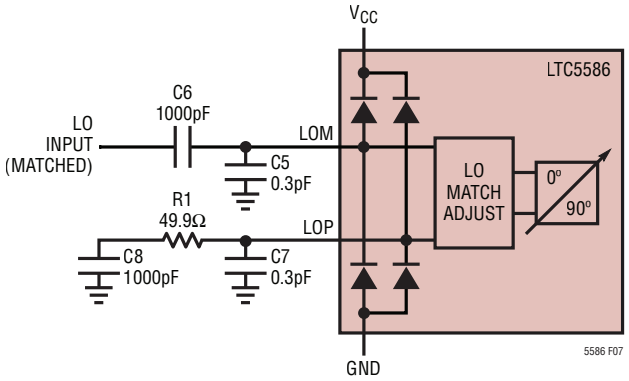

Figure 7. Simplified Schematic of the LO Inputs with Single-Ended Drive

APPLICATIONS INFORMATION

single-ended LO input, it is necessary to terminate the unused LO input (LOP in Figure 7) into 50Ω.

The programmable input match adjust is controlled by the BAND, CF1, LF1, and CF2 registers as detailed in the register map shown in Table 3. The return loss for the register setting in Table 3 is shown in Figure 8.

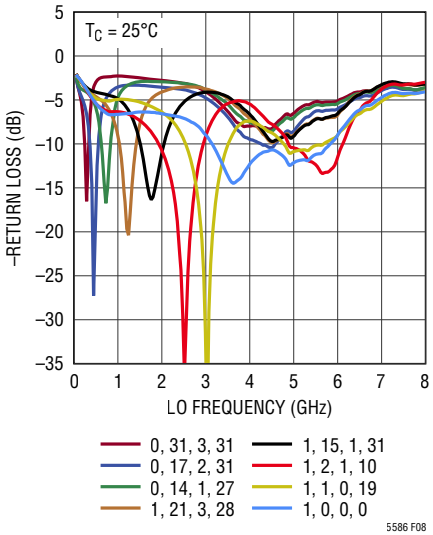

Figure 8. Single-Ended LO Input Return Loss vs BAND, CF1, LF1, and CF2

Table 3. Register Settings for Single-Ended LO Matching

LO FREQUENCY (MHz)	BAND	CF1	LF1	CF2
300 - 339	0	31	3	31
339 - 398	0	21	3	24
398 - 419	0	14	3	23
419 - 556	0	17	2	31
556 - 625	0	10	2	23
625 - 801	0	15	1	31
801 - 831	0	14	1	27
831 - 1046	0	8	1	21
1046 - 1242	1	31	3	31
1242 - 1411	1	21	3	28
1411 - 1696	1	17	2	26
1696 - 2070	1	15	1	31
Default	1	8	3	3
2070 - 2470	1	8	1	21
2470 - 2980	1	2	1	10
2980 - 3500	1	1	0	19
3500 - 6000	1	0	0	0

The LO inputs can also be driven differentially. Figure 10 compares the uncalibrated OIP2 performance of single ended versus differential LO drive using the ANAREN B4859A53 balun as shown in the schematic of Figure 9.

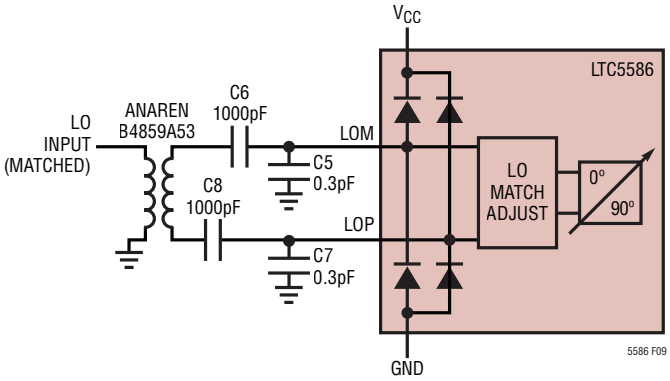

Figure 9. Simplified Schematic of the LO Inputs Using a Balun for Differential Drive

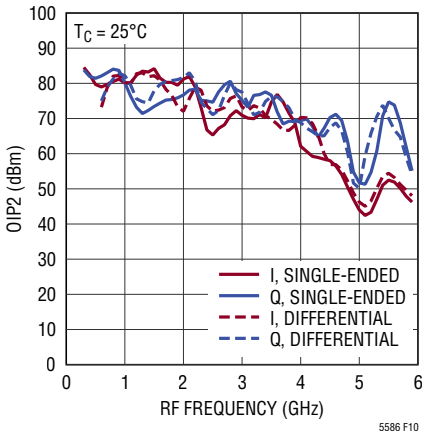

Figure 10. OIP2 vs Single-Ended and Differential LO Input

APPLICATIONS INFORMATION

Interstage Filter

An interstage IF filter should be used between the MIP (MIM) and AIP (AIM) pins and the MQP (MQM) and AQP (AQM) pins to suppress the large $f_{RF} + f_{LO}$ and other mixing products from the mixer outputs. Without the filter, the linearity of the amplifier can be degraded for the desired signal. Figure 11 shows a recommended lowpass filter. Table 4 shows typical values used for a lowpass response of various bandwidths.

Table 4. Component Values for Interstage Lowpass Filter

1dB BW (MHz)	L1, L2 (nH)	C9, C11 (pF)	C10, C12 (pF)
20	330	39	120
50	150	15	47
100	68	10	22
300	33	4.7	6.8
500	22	3.0	3.0
1000	8	0.5	1.0

It is important that the placement of C10 and C12 be as close as possible to the amplifier inputs. Long line lengths on the amplifier inputs can lead to instability. As shown in Figure 12, a 50Ω common-mode termination resistor can be used to better ensure stability with long line lengths and/or higher order filtering. The placement of C9 and C11 should be as close as possible to the mixer outputs for effective filtering of the 2xLO, $f_{RF} + f_{LO}$, and other mixing products.

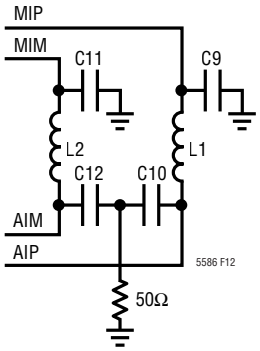

Figure 12. Interstage IF Filter with Common-Mode Termination

By adjusting the values of the capacitors in the filter, it is possible to add or remove frequency slope of the IF

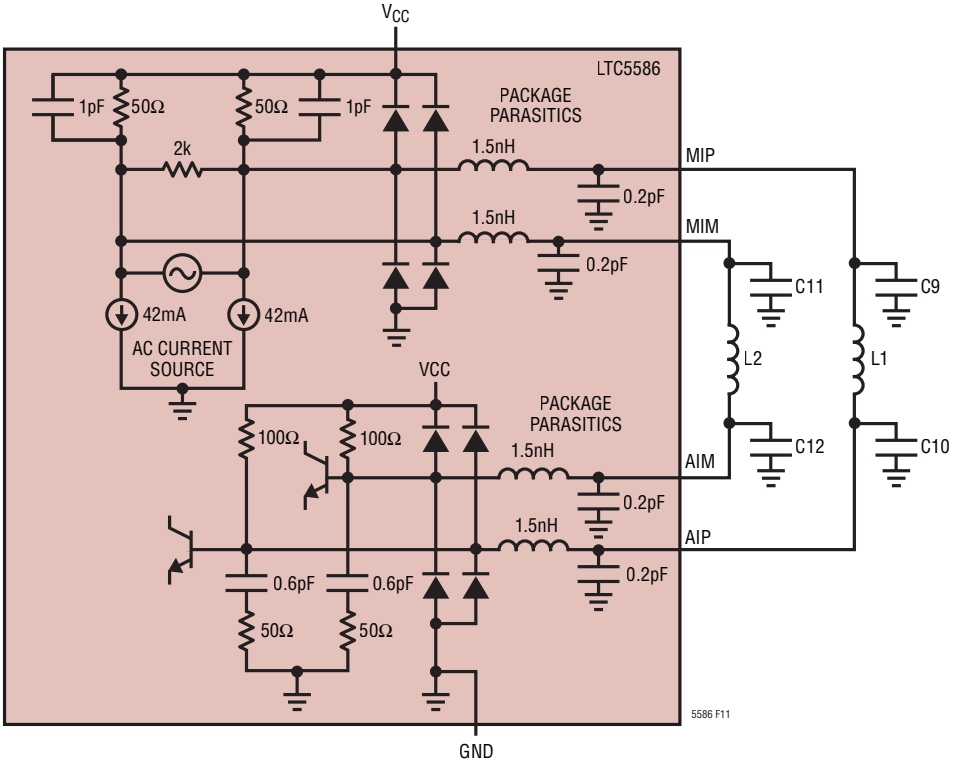

Figure 11. Simplified Schematic of the Mixer Output and IF Amplifier Input with Interstage Filter

APPLICATIONS INFORMATION

response. The RF input has a frequency slope above 2GHz of approximately –2dB/GHz. If a high-side LO (HSLO) is used the resulting IF slope will be 2dB/GHz. If a low-side LO (LSLO) is used the resulting IF slope will be –2dB/GHz. The IF filter component values can be adjusted so that approximately 1dB of peaking or roll-off can be achieved over the filter bandwidth to give an overall flat IF response for the HSLO or LSLO case.

I-Channel and Q-Channel Outputs

The phase relationship between the I-channel output signal and the Q-channel output signal is fixed. When the LO input frequency is higher (or lower) than the RF input frequency, the Q-channel outputs (IFQP, IFQM) lead (or lag) the I-channel outputs (IFIP, IFIM) by 90°.

Figure 14 shows a simplified schematic of the IF amplifier outputs. The current-mode outputs require a terminating resistance to establish a common-mode voltage level. The optimum operating current is 18mA per output. A 50Ω termination to ground is recommended on each output for a 0.9V common-mode voltage. Operation at higher or lower common-mode voltages is possible with the addition of a common-mode termination. For example, to operate at 1.8V, an additional common-mode resistance of 25Ω (R5 = 66.5Ω and R6 = 0Ω, or R5 = R6 = 43.2Ω) would be used to maintain an output current of 18mA. Alternatively, a 100Ω termination to ground on each output can be used for 1.8V common-mode voltage with 6dB more conversion gain. To operate at lower common-mode voltages, a lower termination resistance can be used on each output at the expense of conversion gain, or a negative supply can be used at the connection of the termination resistors. Figure 13 shows the OIP3 of the amplifier alone with various common-mode voltages.

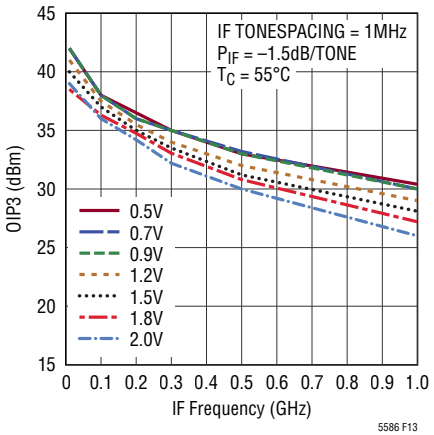

Figure 13. OIP3 of Amplifier Only vs Output Common-Mode Voltage (VCM)

The amplifier gain can be adjusted in 8 steps of roughly 1dB from 8dB to 15dB using the AMPG register. Setting AMPG = 0x7 sets the gain at about 15dB and setting AMPG = 0x0 sets the gain to about 8dB.

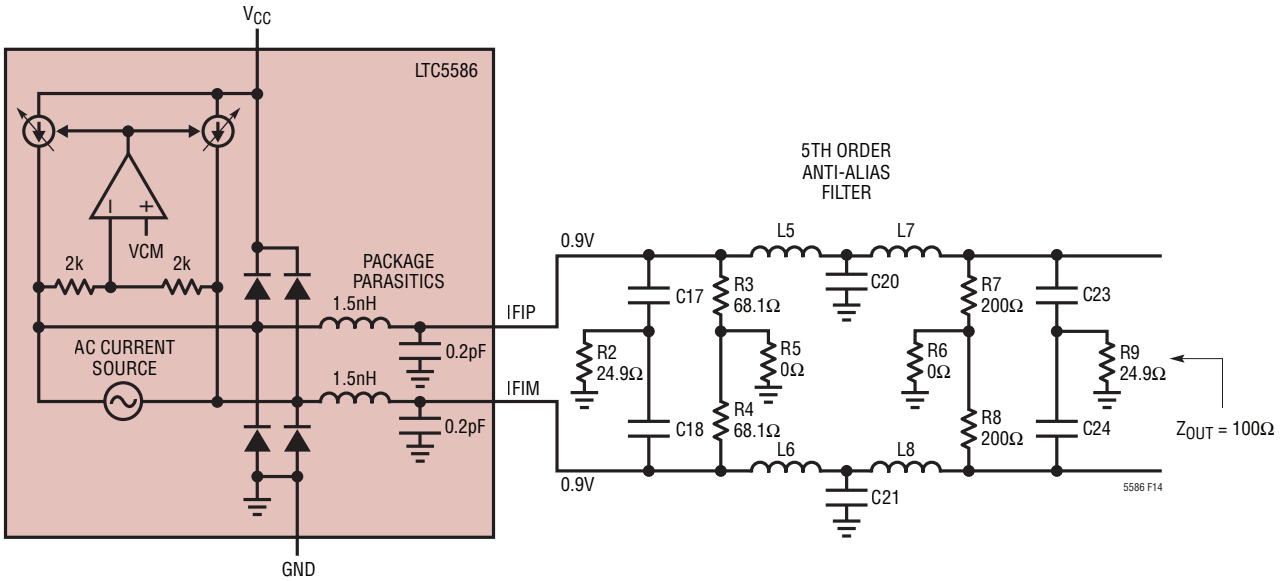

Figure 14. Simplified Schematic of the IF Amplifier Output with Anti-Alias Filter

APPLICATIONS INFORMATION

A typical anti-alias filter is shown in Figure 14 for interface with an ADC. The parallel combinations R3||R7 and R4||R8 set the differential impedance for the ADC. The input and output of the filter contain a common-mode termination for high frequencies. These are formed by C17, C18 and 24.9Ω at the input and C23, C24 and 24.9Ω at the output. The common-mode termination at the amplifier output ensures stability and the common-mode termination at the ADC input provides a termination for the high-frequency kickback from the sampling capacitors in the ADC. Table 5 shows some typical values vs 1dB cutoff frequency for the anti-alias filter. To optimize the flatness and ripple of the IF band, both the IF interstage filter and the anti-alias filter can be designed together in a simulator including package parasitics. The additional slope due to RF slope and HSLO or LSLO can be compensated by using this method. The layout of the anti-alias filter should be done so that the amplifier outputs and ADC inputs are as close as possible. This is to prevent long line lengths from introducing additional parasitics.

Table 5. Component Values for Anti-Alias Lowpass Filter

1dB BW (MHz)	L5 – L8 (nH)	C17, C18 (pF)	C20, C21 (pF)	C23, C24 (pF)
20	560	56	180	82
50	240	22	68	33
100	120	12	39	22
300	33	3.9	8.2	6.8
500	22	1.8	6.8	3.3
1000	8	1.0	3.3	1.8

Tables 6 and 7 show the differential and common-mode S-parameters for the amplifier by itself with 50Ω terminations on all ports. In addition, common-mode terminations were used on the input and output ports having a value of 2pF in series with 50Ω.

Table 6. IF Amplifier S-Parameters (Differential-Mode)

IF	S_{11}		S_{21}		S_{12}		S_{22}	
(MHz)	MAG	ANG	MAG	ANG	MAG	ANG	MAG	ANG
0.001	0.204	–179.9	2.129	180.0	1.8e-4	164.8	0.014	178.5
100	0.203	176.0	2.154	171.9	5.4e-4	118.0	0.026	–120.9
200	0.205	172.2	2.170	163.7	1.0e-4	102.8	0.050	–112.0
300	0.207	168.5	2.197	155.6	1.7e-4	92.8	0.079	–113.5
400	0.210	164.8	2.239	147.3	2.8e-4	93.7	0.111	–118.3
500	0.215	160.9	2.292	138.8	3.2e-4	95.4	0.147	–125.0
600	0.221	157.0	2.363	130.1	4.0e-4	92.0	0.186	–132.1
700	0.227	153.0	2.445	121.2	5.0e-4	92.1	0.230	–140.0
800	0.235	149.0	2.535	112.0	5.5e-4	86.2	0.279	–148.1
900	0.242	144.6	2.642	102.0	6.9e-4	93.2	0.334	–157.0
1000	0.251	140.6	2.770	92.3	7.9e-4	92.7	0.396	–166.2
1500	0.303	117.6	3.420	32.3	0.003	92.6	0.738	134.4
2000	0.365	90.2	3.318	–45.5	0.005	33.2	0.828	70.0
2500	0.385	56.1	2.232	–105.2	0.005	–3.1	0.666	13.1
3000	0.365	16.6	2.620	–160.2	0.005	–34.2	0.488	–38.4
3500	0.319	–28.2	1.021	157.4	0.005	–61.9	0.418	–94.7
4000	0.307	–83.4	0.742	113.3	0.005	–79.5	0.409	–150.6

Table 7. IF Amplifier S-Parameters (Common-Mode)

IF	S_{11}		S_{21}		S_{12}		S_{22}	
(MHz)	MAG	ANG	MAG	ANG	MAG	ANG	MAG	ANG
0.001	0.184	–138.7	9.2e-4	–112.8	0.037	–65.3	0.985	179.8
100	0.186	172.5	0.085	–118.9	0.013	–68.6	0.152	126.7
200	0.188	166.6	0.173	–134.7	0.007	–91.8	0.125	116.7
300	0.191	160.2	0.237	–150.0	0.004	–113.1	0.097	97.3
400	0.196	154.4	0.291	–163.8	0.002	–145.4	0.067	75.2
500	0.202	148.4	0.340	–176.8	0.002	170.2	0.037	43.6
600	0.210	142.8	0.387	170.9	0.002	137.0	0.023	–38.0
700	0.219	137.2	0.436	159.1	0.003	118.1	0.051	–97.8
800	0.230	132.0	0.488	147.1	0.003	107.8	0.094	–121.5
900	0.243	126.5	0.550	134.9	0.004	106.6	0.148	–137.0
1000	0.252	120.9	0.612	122.2	0.006	104.8	0.211	–151.3
1500	0.325	96.7	0.981	43.4	0.020	80.4	0.749	136.1
2000	0.438	72.1	0.776	–46.1	0.036	18.6	1.000	55.9
2500	0.549	40.1	0.496	–97.1	0.041	–21.9	0.873	2.9
3000	0.601	6.9	0.397	–143.2	0.042	–52.2	0.764	–37.3
3500	0.618	–27.5	0.281	–175.7	0.044	–80.3	0.668	–72.7
4000	0.595	–60.3	0.254	147.3	0.046	–101.2	0.620	–107.0

APPLICATIONS INFORMATION

The common-mode feedback amplifier holds the common-mode output voltage within about 20mV of the VCM pin voltage. The VCM pin interface is shown in Figure 15. The VCM pin should be driven by a voltage source with an output impedance lower than 1kΩ. When the VCM pin is unbiased, the output common-mode voltage will be held at a nominal 0.9V given by the internal voltage divider formed by the 40kΩ and 8kΩ resistors. Connecting the VCM pin to an ADC common-mode reference pin allows the output common-mode voltage of the IF amplifier to track the ADC common-mode.

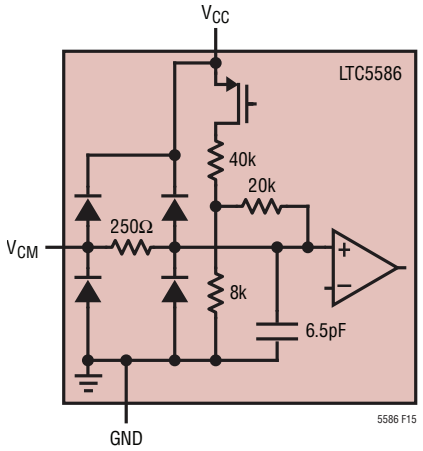

Figure 15. Simplified Schematic of the VCM Input Pin

Temperature Diode

A schematic of the TEMP pin is shown in Figure 16. The temperature diode can be used to directly measure the die temperature. A 40kΩ resistor is recommended to V_{CC} to generate a 100µA current source for the diode readout. The temperature slope is about –1.52mV/°C.

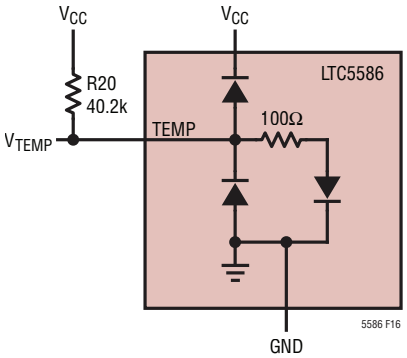

Figure 16. Schematic of the TEMP Pin

Digital Input Pins

Figure 17 show the simplified schematics for the digital input pins, SCK, CSB, SDI, and RFSW. These pins should not be left floating, since there is no internal pull-down or pull-up.

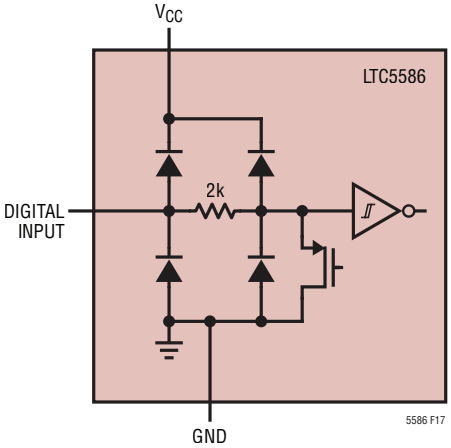

Figure 17. Simplified Schematic of the Digital Input Pins (SCK, CSB, SDI, RFSW)

OVDD Interface

Figure 18 shows the simplified schematic of the OVDD interface. The OVDD pin supplies the voltage for the digital inputs and SDO pin. By setting the pin at 1.2V to 3.3V, the serial port can function with 1.2V to 3.3V logic levels. It is important that when sequencing the supply voltages for the chip that the VCC supply be brought up first before the OVDD supply. This is to prevent the ESD diode connected between OVDD and VCC from getting damaged.

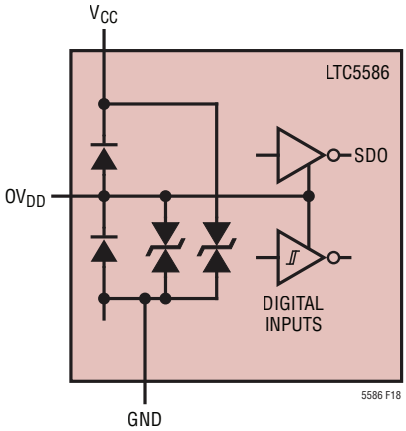

Figure 18. Simplified Schematic of the OVDD Pin Interface

APPLICATIONS INFORMATION

SERIAL PORT

The SPI-compatible serial port provides control and monitoring functionality.

Communication Sequence

The serial bus is comprised of CSB, SCK, SDI and SDO. Data transfers to the part are accomplished by the serial bus master device first taking CSB low to enable the LTC5586's port. Input data applied on SDI is clocked on the rising edge of SCK, with all transfers MSB first. The communication burst is terminated by the serial bus master returning CSB high. See the timing diagrams for details.

Data is read from the part during a communication burst using SDO. Readback may be multidrop (more than one LTC5586 or other serial device connected in parallel on the serial bus), as SDO is high impedance (Hi-Z) when CSB = 1.

Single Byte Transfers

The serial port is arranged as a simple memory map, with status and control available in 23 registers as shown in the appendix. All data bursts are comprised of at least two 8-bit bytes. The most significant bit of the first byte is the read/write bit. Setting this bit to 1 puts the serial port into read mode. The next 7 bits of the first byte are address bits and can be set from 0x00 to 0x17. The subsequent byte, or bytes, is data from/to the specified register address. See the timing diagrams for details. Note that the written data is transferred to the internal register at the falling edge of the 16th clock cycle (parallel load).

Multiple Byte Transfers

More efficient data transfer of multiple bytes is accomplished by using the LTC5586's register address auto-increment feature as shown in the timing diagram. The serial port master sends the destination register address in the first byte and reads or writes data in the second byte as before, but on the third byte the address pointer is auto-incremented by 1 and the serial port master can read or write to subsequent registers. If the register address pointer attempts to increment past 23 (0x17), it is automatically reset to 0.

SDO_MODE Control Bit

The SDO output has two modes of operation as shown in the timing diagram. When register 0x16 control bit SDO_MODE = 0, the SDO pin functions as a normal output which is High-Z during a write command. If SDO_MODE = 1, the SDO output is put into a serial repeater mode where SDO echoes the command written to SDI before readback of register contents either in read or write mode. This can be used in high bus noise environments where it is necessary to perform error-checking on commands sent to the serial port.

A simplified schematic of the SDO output is shown in Figure 19. The OVDD supply sets the logic level of the output, and a 25Ω series resistor limits the output current.

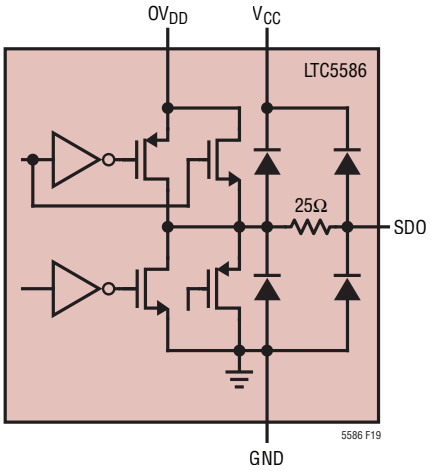

Figure 19. Simplified Schematic of the SDO Pin Interface

Register Defaults

The register map and defaults are given in Tables 8 and 9 in the appendix. When the device is powered up, the registers may not be reset to their default values. By writing a 1 to the SRST bit (bit[3]) of register 0x16, the device will go into soft reset and the registers will be reset to their default values.

APPLICATIONS INFORMATION

Impairment Minimization

The LTC5586 contains circuitry for minimizing receiver impairments such as DC offset, Phase and Gain Error, and non-linearity. An example block diagram of a DPD transmitter application is shown in Figure 20. A DSP is used to implement a 2-tone source and minimization algorithms for calibration of impairments. To setup the DSP for impairment calibration, the DATA ENCODER would be configured to produce symbols for two tones in the band of interest. The tones would be modulated up to the carrier frequency of f_{LO} before being applied to the LTC5586 RFA input. The tones are then down-converted to baseband for the DSP.

In the DSP, a complex-FFT can be used to extract gain error and phase error for image rejection optimization, while the FFT of each channel can be used to optimize DC offset and nonlinearities independently. One possible general optimization method would be to sequentially apply a 1-D minimization algorithm to each impairment. A simple bisection method or more complicated (but faster converging) Brent's method[1] could be used for the 1-D minimization.

Figure 21 shows the non-optimized spectrum and Figure 22 shows the optimized spectrum for a 2-tone test signal at 2GHz. The Upper Sideband spectrum is the desired signal while the Lower Sideband is the image signal.

[1] Saul Teukolsky, William T. Vetterling, William H. Press, and Brian P. Flannery, "Numerical Recipes in C: The Art of Scientific Computing," p. 352, 1988.

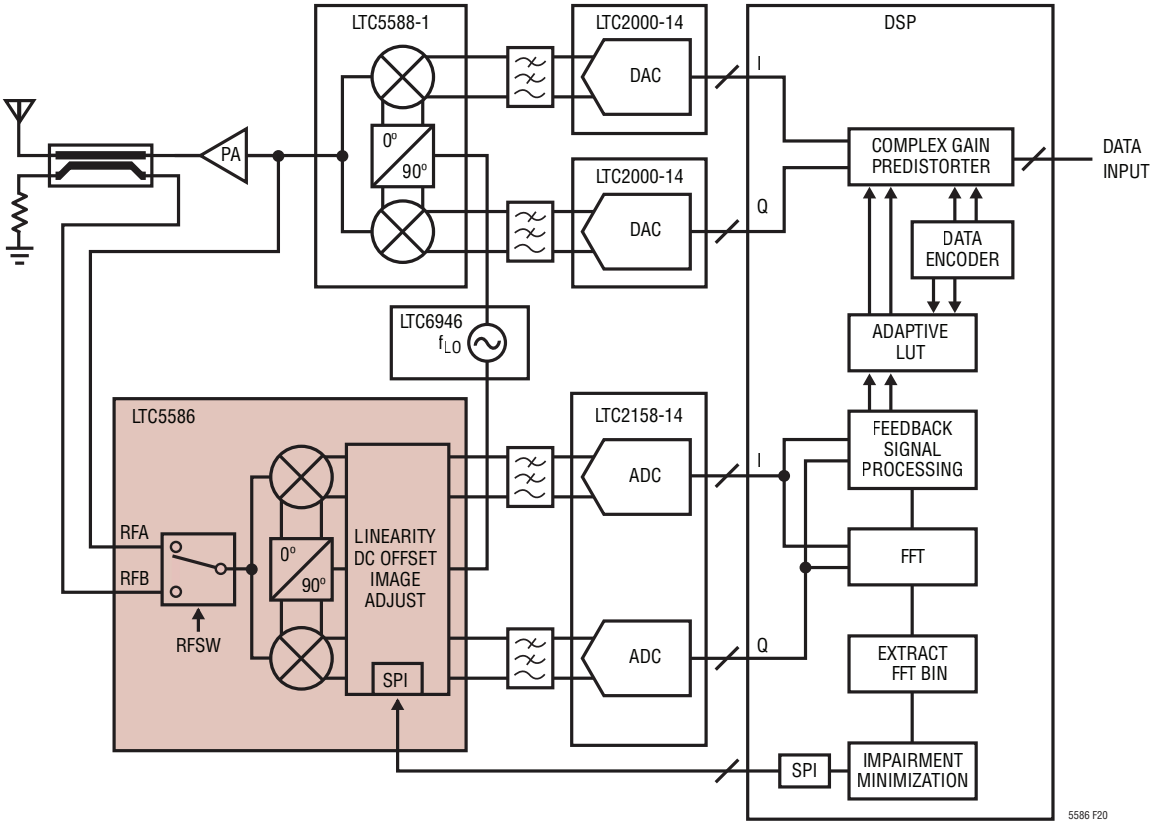

Figure 20. Example Block Diagram of a DPD Transmitter with DSP for Impairment Minimization

APPLICATIONS INFORMATION

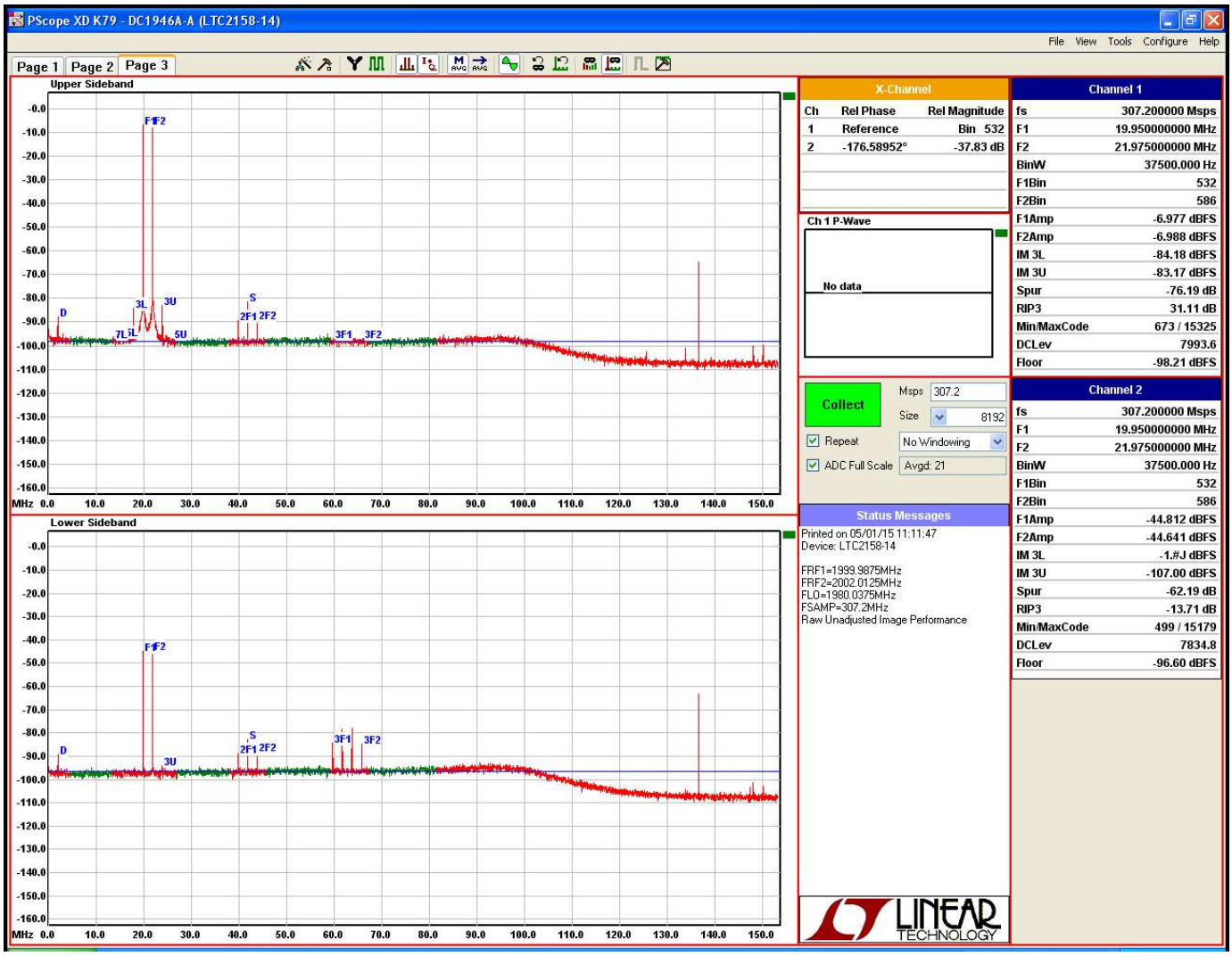

Figure 21. Non-Optimized 2-Tone Spectrum at 2GHz with 100MHz Anti-Alias Filter

APPLICATIONS INFORMATION

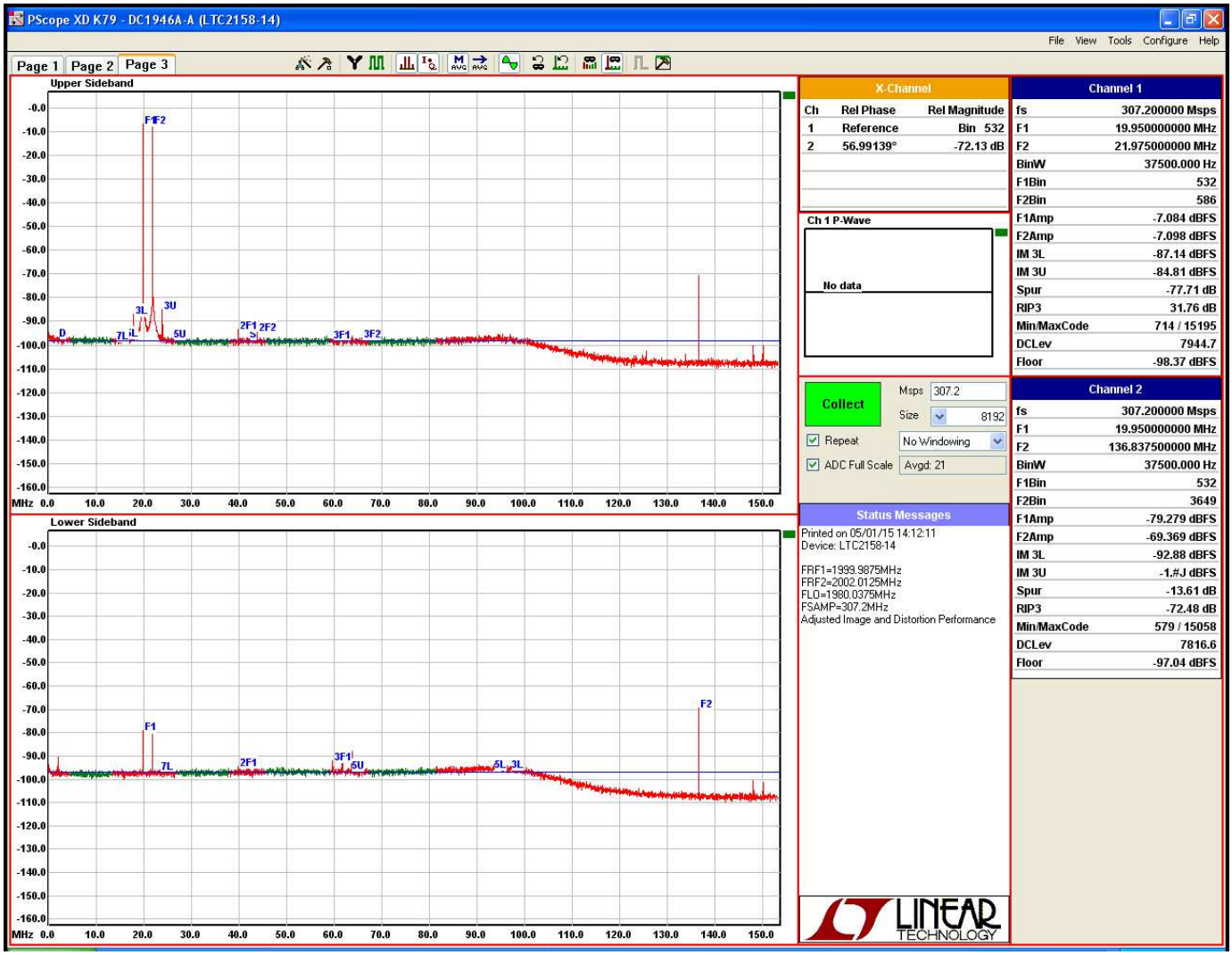

Figure 22. Optimized 2-Tone Spectrum at 2GHz with 100MHz Anti-Alias Filter

APPENDIX

Table 8. Serial Port Register Contents

ADDR	MSB	[6]	[5]	[4]	[3]	[2]	[1]	LSB	R/W	DEFAULT
0x00	IM3QY[7]	IM3QY[6]	IM3QY[5]	IM3QY[4]	IM3QY[3]	IM3QY[2]	IM3QY[1]	IM3QY[0]	R/W	0x80
0x01	IM3QX[7]	IM3QX[6]	IM3QX[5]	IM3QX[4]	IM3QX[3]	IM3QX[2]	IM3QX[1]	IM3QX[0]	R/W	0x80
0x02	IM3IY[7]	IM3IY[6]	IM3IY[5]	IM3IY[4]	IM3IY[3]	IM3IY[2]	IM3IY[1]	IM3IY[0]	R/W	0x80
0x03	IM3IX[7]	IM3IX[6]	IM3IX[5]	IM3IX[4]	IM3IX[3]	IM3IX[2]	IM3IX[1]	IM3IX[0]	R/W	0x80
0x04	IM2QX[7]	IM2QX[6]	IM2QX[5]	IM2QX[4]	IM2QX[3]	IM2QX[2]	IM2QX[1]	IM2QX[0]	R/W	0x80
0x05	IM2IX[7]	IM2IX[6]	IM2IX[5]	IM2IX[4]	IM2IX[3]	IM2IX[2]	IM2IX[1]	IM2IX[0]	R/W	0x80
0x06	HD3QY[7]	HD3QY[6]	HD3QY[5]	HD3QY[4]	HD3QY[3]	HD3QY[2]	HD3QY[1]	HD3QY[0]	R/W	0x80
0x07	HD3QX[7]	HD3QX[6]	HD3QX[5]	HD3QX[4]	HD3QX[3]	HD3QX[2]	HD3QX[1]	HD3QX[0]	R/W	0x80
0x08	HD3IY[7]	HD3IY[6]	HD3IY[5]	HD3IY[4]	HD3IY[3]	HD3IY[2]	HD3IY[1]	HD3IY[0]	R/W	0x80
0x09	HD3IX[7]	HD3IX[6]	HD3IX[5]	HD3IX[4]	HD3IX[3]	HD3IX[2]	HD3IX[1]	HD3IX[0]	R/W	0x80
0x0A	HD2QY[7]	HD2QY[6]	HD2QY[5]	HD2QY[4]	HD2QY[3]	HD2QY[2]	HD2QY[1]	HD2QY[0]	R/W	0x80
0x0B	HD2QX[7]	HD2QX[6]	HD2QX[5]	HD2QX[4]	HD2QX[3]	HD2QX[2]	HD2QX[1]	HD2QX[0]	R/W	0x80
0x0C	HD2IY[7]	HD2IY[6]	HD2IY[5]	HD2IY[4]	HD2IY[3]	HD2IY[2]	HD2IY[1]	HD2IY[0]	R/W	0x80
0x0D	HD2IX[7]	HD2IX[6]	HD2IX[5]	HD2IX[4]	HD2IX[3]	HD2IX[2]	HD2IX[1]	HD2IX[0]	R/W	0x80
0x0E	DCOI[7]	DCOI[6]	DCOI[5]	DCOI[4]	DCOI[3]	DCOI[2]	DCOI[1]	DCOI[0]	R/W	0x80
0x0F	DCOQ[7]	DCOQ[6]	DCOQ[5]	DCOQ[4]	DCOQ[3]	DCOQ[2]	DCOQ[1]	DCOQ[0]	R/W	0x80
0x10	ATT[4]	ATT[3]	ATT[2]	ATT[1]	ATT[0]	IP3IC[2]	IP3IC[1]	IP3IC[0]	R/W	0x04
0x11	GERR[5]	GERR[4]	GERR[3]	GERR[2]	GERR[1]	GERR[0]	IP3CC[1]	IP3CC[0]	R/W	0x82
0x12	LVCM[2]	LVCM[1]	LVCM[0]	CF1[4]	CF1[3]	CF1[2]	CF1[1]	CF1[0]	R/W	0x48
0x13	BAND	LF1[1]	LF1[0]	CF2[4]	CF2[3]	CF2[2]	CF2[1]	CF2[0]	R/W	0xE3
0x14	PHA[8]	PHA[7]	PHA[6]	PHA[5]	PHA[4]	PHA[3]	PHA[2]	PHA[1]	R/W	0x80
0x15	PHA[0]	AMPG[2]	AMPG[1]	AMPG[0]	AMPCC[1]	AMPCC[0]	AMPIC[1]	AMPIC[0]	R/W	0x6A
0x16	1*	1*	1*	1*	SRST	SDO_MODE	0*	0*	R/W	0xF0
0x17	CHIPID[1]	CHIPID[0]	0*	0*	0*	0*	0*	RFSW	R/W	0x01

*Unused, do not change default value.

APPENDIX

Table 9. Serial Port Register Bit Field Summary

BITS	FUNCTION	DESCRIPTION	VALID VALUES	DEFAULT
AMPCC[1:0]	IF Amplifier IM3 CC Adjust	Used to optimize the IF amplifier IM3.	0x00 to 0x03	0x02
AMPIC[1:0]	IF Amplifier IM3 IC Adjust	Used to optimize the IF amplifier IM3.	0x00 to 0x03	0x02
AMPG[2:0]	IF Amplifier Gain Adjust	Adjusts the amplifier gain from 8dB to 15dB.	0x00 to 0x07	0x06
ATT[4:0]	Step Attenuator Control	Controls the step attenuator from 0dB to 31dB attenuation.	0x00 to 0x1F	0x00
BAND	LO Band Select	Selects which LO matching band is used. BAND = 1 for high band. BAND = 0 for low band.	0, 1	1
CF1[5:0]	LO Matching Capacitor CF1	Controls the CF1 capacitor in the LO matching network.	0x00 to 0x1F	0x08
CF2[5:0]	LO Matching Capacitor CF2	Controls the CF2 capacitor in the LO matching network.	0x00 to 0x1F	0x03
CHIPID	Chip Identification Bits	Factory set to default value.	0x00 to 0x03	0x00
DCOI[7:0]	I-Channel DC Offset	Controls the I-channel DC offset over a range from –200mV to 200mV.	0x00 to 0xFF	0x80
DCOQ[7:0]	Q-Channel DC Offset	Controls the Q-channel DC offset over a range from –200mV to 200mV.	0x00 to 0xFF	0x80
GERR[5:0]	IQ Gain Error Adjust	Controls the IQ gain error over a range from –0.5dB to 0.5dB.	0x00 to 0x3F	0x20
HD2IX[7:0]	HD2 I-Channel X-Vector	Controls the I-channel HD2 X-vector adjustment.	0x00 to 0xFF	0x80
HD2IY[7:0]	HD2 I-Channel Y-Vector	Controls the I-channel HD2 Y-vector adjustment.	0x00 to 0xFF	0x80
HD2QX[7:0]	HD2 Q-Channel X-Vector	Controls the Q-channel HD2 X-vector adjustment.	0x00 to 0xFF	0x80
HD2QY[7:0]	HD2 Q-Channel Y-Vector	Controls the Q-channel HD2 Y-vector adjustment.	0x00 to 0xFF	0x80
HD3IX[7:0]	HD3 I-Channel X-Vector	Controls the I-channel HD3 X-vector adjustment.	0x00 to 0xFF	0x80
HD3IY[7:0]	HD3 I-Channel Y-Vector	Controls the I-channel HD3 Y-vector adjustment.	0x00 to 0xFF	0x80
HD3QX[7:0]	HD3 Q-Channel X-Vector	Controls the Q-channel HD3 X-vector adjustment.	0x00 to 0xFF	0x80
HD3QY[7:0]	HD3 Q-Channel Y-Vector	Controls the Q-channel HD3 Y-vector adjustment.	0x00 to 0xFF	0x80
IM2IX[7:0]	IM2 I-Channel X-Vector	Controls the I-channel IM2 X-vector adjustment.	0x00 to 0xFF	0x80
IM2QX[7:0]	IM2 Q-Channel X-Vector	Controls the Q-channel IM2 X-vector adjustment.	0x00 to 0xFF	0x80
IM3IX[7:0]	IM3 I-Channel X-Vector	Controls the I-channel IM3 X-vector adjustment.	0x00 to 0xFF	0x80
IM3IY[7:0]	IM3 I-Channel Y-Vector	Controls the I-channel IM3 Y-vector adjustment.	0x00 to 0xFF	0x80
IM3QX[7:0]	IM3 Q-Channel X-Vector	Controls the Q-channel IM3 X-vector adjustment.	0x00 to 0xFF	0x80
IM3QY[7:0]	IM3 Q-Channel Y-Vector	Controls the Q-channel IM3 Y-vector adjustment.	0x00 to 0xFF	0x80
IP3CC[1:0]	RF Input IP3 CC Adjust	Used to optimize the RF input IP3.	0x00 to 0x03	0x02
IP3IC[2:0]	RF Input IP3 IC Adjust	Used to optimize the RF input IP3.	0x00 to 0x07	0x04
LF1[1:0]	LO Matching Inductor LF1	Controls the LF1 inductor in the LO matching network.	0x00 to 0x03	0x03
LVCM[2:0]	LO Bias Adjust	Used to optimize mixer IP3.	0x00 to 0x07	0x02
PHA[8:0]	IQ Phase Error Adjust	Controls the IQ phase error over a range from –2.5 Degrees to 2.5 Degrees.	0x000 to 0x1FF	0x100
RFSW	RF Switch Input Select	Controls the RF switch state with a logical AND of the RFSW pin.	0, 1	1
SDO_MODE	SDO Readback Mode	Enables the SDO readback mode if SDO_MODE = 1.	0, 1	0
SRST	Soft Reset	Writing 1 to this bit resets all registers to their default values.	0, 1	0

PACKAGE DESCRIPTION

Please refer to http://www.linear.com/product/LTC5586#packaging for the most recent package drawings.

UH Package
32-Lead Plastic QFN (5mm × 5mm)
(Reference LTC DWG # 05-08-1693 Rev D)

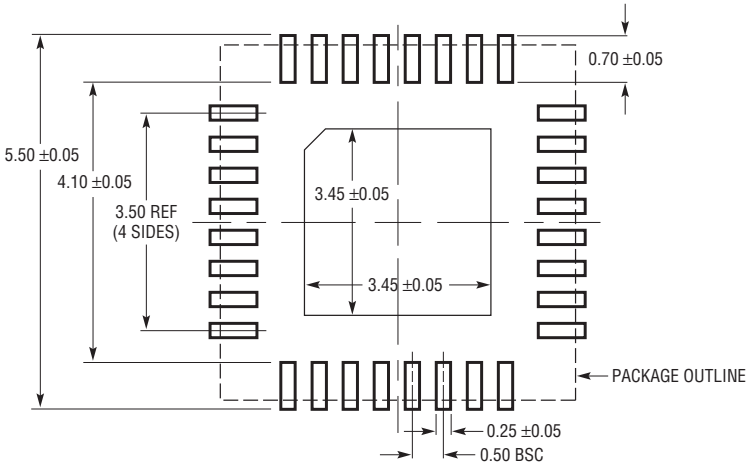

RECOMMENDED SOLDER PAD LAYOUT
APPLY SOLDER MASK TO AREAS THAT ARE NOT SOLDERED

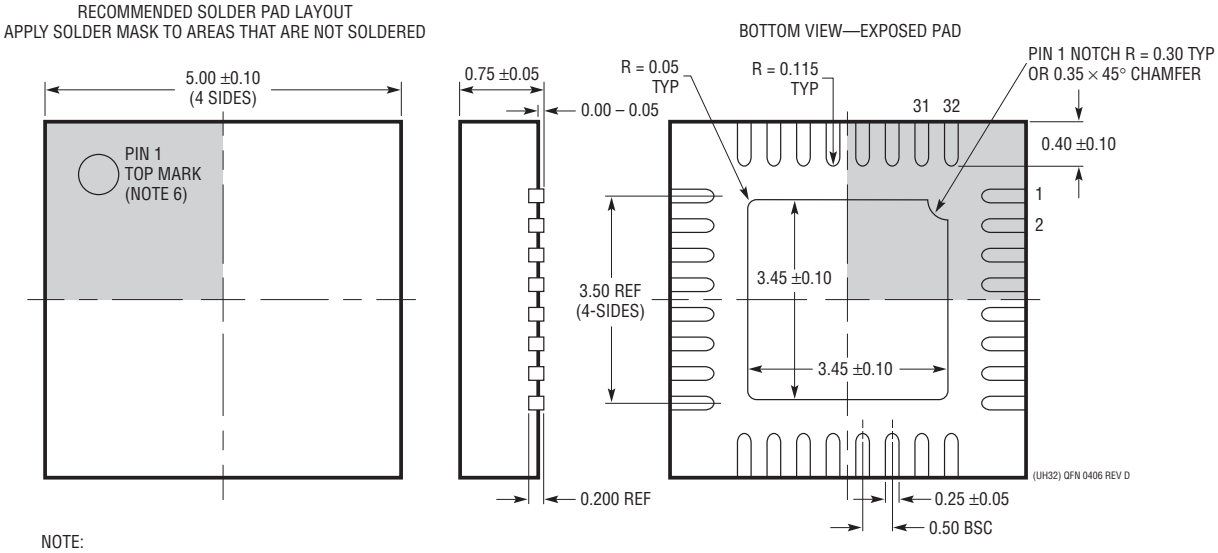

NOTE:
1. DRAWING PROPOSED TO BE A JEDEC PACKAGE OUTLINE M0-220 VARIATION WHHD-(X) (TO BE APPROVED)
2. DRAWING NOT TO SCALE
3. ALL DIMENSIONS ARE IN MILLIMETERS
4. DIMENSIONS OF EXPOSED PAD ON BOTTOM OF PACKAGE DO NOT INCLUDE MOLD FLASH. MOLD FLASH, IF PRESENT, SHALL NOT EXCEED 0.20mm ON ANY SIDE
5. EXPOSED PAD SHALL BE SOLDER PLATED
6. SHADED AREA IS ONLY A REFERENCE FOR PIN 1 LOCATION ON THE TOP AND BOTTOM OF PACKAGE

REVISION HISTORY

REV	DATE	DESCRIPTION	PAGE NUMBER
A	08/17	Various corrections.	5, 7, 14, 21, 23, 32

Information furnished by Linear Technology Corporation is believed to be accurate and reliable. However, no responsibility is assumed for its use. Linear Technology Corporation makes no representation that the interconnection of its circuits as described herein will not infringe on existing patent rights.

TYPICAL APPLICATION

Simplified Schematic of a 0.3GHz to 6.0GHz Receiver, (Only I-Channel Is Shown)

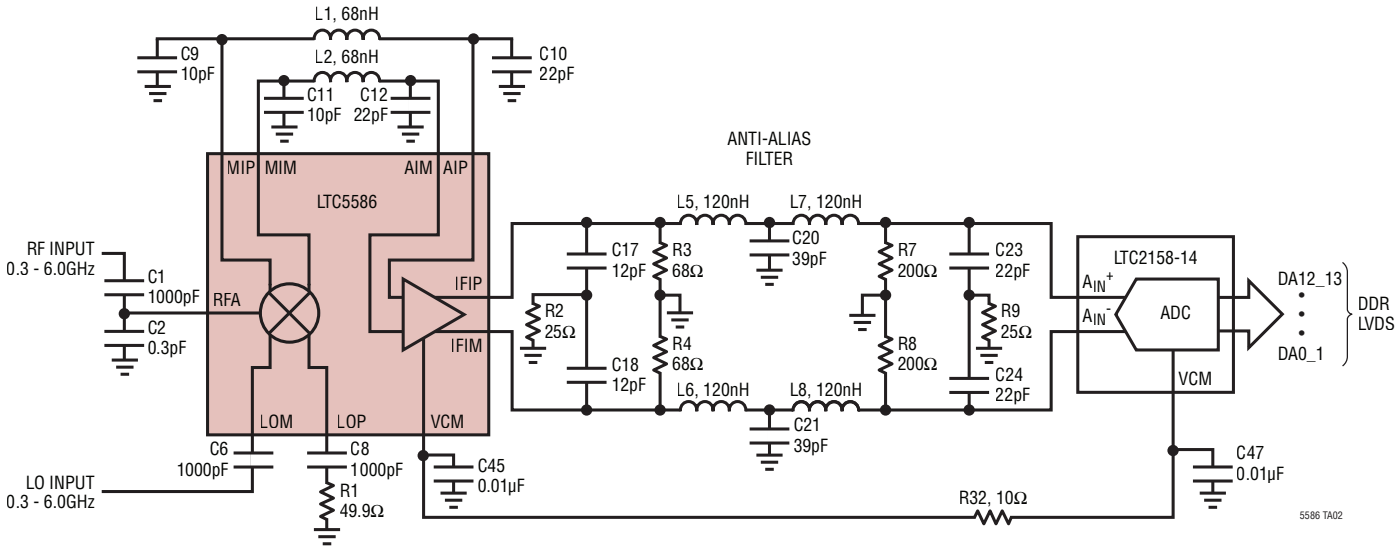

RELATED PARTS

PART NUMBER	DESCRIPTION	COMMENTS
Infrastructure		
LTC5569	300MHz to 4GHz Dual Active Downconverting Mixer	2dB Gain, 26.7dBm IIP3 and 11.7dB NF at 1950MHz, 3.3V/180mA Supply
LTC6409	10GHz GBW Differential Amplifier	DC-Coupled, 48dBm OIP3 at 140MHz, 1.1nV/$\sqrt{Hz}$ Input Noise Density
LTC5549	2GHz to 14GHz Mixer with Integrated LO Doubler	Ultra-Wideband Bidirectional Up-, or Down-Conversion Mixer, +22.8dBm IIP3 at 12GHz, 0dBm LO Drive, 500MHz to 6GHz IF Bandwidth
LTC5548	2GHz to 14GHz Mixer with IF Frequency Extending to DC	Ultra-Wideband Bidirectional Up-, or Down-Conversion Mixer, +18.7dBm IIP3 at 12GHz, 0dBm LO Drive with On-Chip Frequency Doubler, DC to 6GHz IF Bandwidth
LTC5588-1	200MHz to 6GHz Quadrature Modulator	+31dBm OIP3, –160dBm/Hz Output Noise Floor, Excellent ACPR Performance
RF PLL/Synthesizer with VCO		
LTC6946-3	Low Noise, Low Spurious Integer-N PLL with Integrated VCO	640MHz to 5.79GHz, –157dBc/Hz WB Phase Noise Floor, –100dBc/Hz Closed-Loop Phase Noise
LTC6948	Ultralow Noise Fractional-N Synthesizer with Integrated VCO	370MHz to 6.39GHz PLL, No Delta-Sigma Modulator Spurs, 18-Bit Fractional Denominator, –226dBc/Hz Normalized In-Band Phase Noise Floor
ADCs		
LTC2145-14	14-Bit, 125Msps 1.8V Dual ADC	73.1dB SNR, 90dB SFDR, 95mW/Ch Power Consumption
LTC2185	16-Bit, 125Msps 1.8V Dual ADC	76.8dB SNR, 90dB SFDR, 185mW/Channel Power Consumption
LTC2158-14	14-Bit, 310Msps 1.8V Dual ADC, 1.25GHz Full-Power Bandwidth	68.8dB SNR, 88dB SFDR, 362mW/Ch Power Consumption, 1.32V_{P-P} Input Range

LT 0817 REV A • PRINTED IN USA
www.linear.com/LTC5586
© LINEAR TECHNOLOGY CORPORATION 2017