M58LR128HC
M58LR128HD

128 Mbit (x16, Mux I/O, Multiple Bank, Multilevel interface, Burst)

1.8 V supply Flash memories

Features

- Supply voltage
  - V_{DD} = 1.7 V to 2.0 V for program, erase and read
  - V_{DDQ} = 1.7 V to 2.0 V for I/O Buffers
  - V_{PP} = 9 V for fast program
- Multiplexed address/data
- Synchronous / Asynchronous Read
  - Synchronous Burst Read mode: 66 MHz
  - Random Access: 70 ns
- Synchronous Burst Read Suspend
- Programming time
  - 2.5 µs typical Word program time using Buffer Enhanced Factory Program command
- Memory organization
  - Multiple Bank memory array: 8 Mbit Banks
  - Parameter Blocks (top or bottom location)
- Dual operations
  - program/erase in one Bank while read in others
  - No delay between read and write operations
- Block locking
  - All blocks locked at power-up
  - Any combination of blocks can be locked with zero latency
  - $\overline{WP}$ for Block Lock-Down
  - Absolute Write Protection with $V_{PP} = V_{SS}$

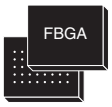

VFBGA44 (ZB) 7.7 × 9 mm

- Security
  - 64 bit unique device number
  - 2112 bit user programmable OTP Cells
- Common Flash Interface (CFI)
- 100 000 program/erase cycles per block
- Electronic signature
  - Manufacturer Code: 20h
  - Top Device Codes: M58LR128HC: 882Eh
  - Bottom Device Codes M58LR128HD: 882Fh
- VFBGA44 package
  - ECOPACK® compliant

Contents

1 Description 8

2 Signal descriptions 13

2.1 Address Inputs (ADQ0-ADQ15 and A16-A22) 13
2.2 Data Input/Output (ADQ0-ADQ15) 13
2.3 Chip Enable ($\overline{E}$) 13
2.4 Output Enable ($\overline{G}$) 13
2.5 Write Enable ($\overline{W}$) 13
2.6 Write Protect ($\overline{WP}$) 13
2.7 Reset ($\overline{RP}$) 14
2.8 Latch Enable ($\overline{L}$) 14
2.9 Clock (K) 14
2.10 Wait (WAIT) 14
2.11 V_{DD} supply voltage 14
2.12 V_{DDQ} supply voltage 14
2.13 V_{PP} Program supply voltage 15
2.14 V_{SS} ground 15
2.15 V_{SSQ} ground 15

3 Bus operations 16

3.1 Bus Read 16
3.2 Bus Write 16
3.3 Address Latch 16
3.4 Output Disable 16
3.5 Standby 17
3.6 Reset 17

4 Command interface 18

4.1 Read Array command 19
4.2 Read Status Register command 19
4.3 Read Electronic Signature command 20
4.4 Read CFI Query command 20

4.5 Clear Status Register command 21
4.6 Block Erase command 21
4.7 The Blank Check command 22
4.8 Program command 23
4.9 Buffer Program command 24
4.10 Buffer Enhanced Factory Program command 25
4.10.1 Setup Phase 25
4.10.2 Program and Verify Phase 26
4.10.3 Exit Phase 26
4.11 Program/Erase Suspend command 27
4.12 Program/Erase Resume command 28
4.13 Protection Register Program command 28
4.14 Set Configuration Register command 29
4.15 Block Lock command 29
4.16 Block Unlock command 29
4.17 Block Lock-Down command 30

5 Status Register 35
5.1 Program/Erase Controller status bit (SR7) 35
5.2 Erase Suspend status bit (SR6) 35
5.3 Erase/Blank Check status bit (SR5) 36
5.4 Program status bit (SR4) 36
5.5 V_{PP} status bit (SR3) 36
5.6 Program Suspend status bit (SR2) 37
5.7 Block Protection status bit (SR1) 37
5.8 Bank Write/Multiple Word Program status bit (SR0) 37

6 Configuration Register 39
6.1 Read Select bit (CR15) 39
6.2 X-Latency bits (CR13-CR11) 39
6.3 Wait Polarity bit (CR10) 40
6.4 Data Output Configuration bit (CR9) 40
6.5 Wait Configuration bit (CR8) 40
6.6 Burst type bit (CR7) 40

6.7 Valid Clock edge bit (CR6) 41
6.8 Wrap burst bit (CR3) 41
6.9 Burst length bits (CR2-CR0) 41

7 Read modes 47
7.1 Asynchronous Read mode 47
7.2 Synchronous Burst Read mode 47
7.2.1 Synchronous Burst Read Suspend 48
7.3 Single Synchronous Read mode 48

8 Dual operations and Multiple Bank architecture 49

9 Block locking 51
9.1 Reading a Block's lock status 51
9.2 Locked state 51
9.3 Unlocked state 51
9.4 Lock-Down state 52
9.5 Locking operations during Erase Suspend 52

10 Program and erase times and endurance cycles 54

11 Maximum rating 56

12 DC and AC parameters 57

13 Package mechanical 72

14 Part numbering 76

Appendix A Block address tables 77

Appendix B Common Flash Interface 85

Appendix C Flowcharts and pseudo codes 95

Appendix D Command interface state tables. 104

Revision history 113

List of tables

Table 1. Signal names . . . 10
Table 2. M58LR128HC/D bank architecture . . . 12
Table 3. Bus operations . . . 17
Table 4. Command codes . . . 18
Table 5. Standard commands . . . 31
Table 6. Factory Commands . . . 32
Table 7. Electronic signature codes . . . 32
Table 8. Protection Register locks . . . 34
Table 9. Status Register bits . . . 38
Table 10. X-latency settings . . . 39
Table 11. Configuration Register . . . 42
Table 12. Burst type definition . . . 43
Table 13. Dual operations allowed in other banks . . . 49
Table 14. Dual operations allowed in same bank . . . 50
Table 15. Dual operation limitations . . . 50
Table 16. Lock status . . . 53
Table 17. Program/Erase times and endurance cycles . . . 54
Table 18. Absolute maximum ratings . . . 56
Table 19. Operating and AC measurement conditions . . . 57
Table 20. Capacitance . . . 58
Table 21. DC characteristics - currents . . . 59
Table 22. DC characteristics - voltages . . . 60
Table 23. Asynchronous Read AC characteristics . . . 62
Table 24. Synchronous Read AC characteristics . . . 66
Table 25. Write AC characteristics, Write Enable controlled . . . 68
Table 26. Write AC characteristics, Chip Enable controlled . . . 70
Table 27. Reset and Power-up AC characteristics . . . 71
Table 28. VFBGA44 7.7x9mm - 10x4 ball array, 0.50mm pitch, package mechanical data . . . 73
Table 29. Ordering information scheme . . . 76
Table 30. Top boot block addresses, M58LR128HC . . . 77
Table 31. Bottom boot block addresses, M58LR128HD . . . 81
Table 32. Query structure overview . . . 85
Table 33. CFI query identification string . . . 86
Table 34. CFI query system interface information . . . 87
Table 35. Device geometry definition . . . 88
Table 36. Primary Algorithm-Specific Extended Query Table . . . 89
Table 37. Protection Register information . . . 90
Table 38. Burst Read information . . . 90
Table 39. Bank and Erase Block region information . . . 91
Table 40. Bank and Erase Block region 1 information . . . 91
Table 41. Bank and Erase Block region 2 information . . . 93
Table 42. Command Interface states - modify table, next state . . . 104
Table 43. Command Interface states - modify table, next output state . . . 107
Table 44. Command interface states - lock table, next state . . . 109
Table 45. Command interface states - lock table, next output state . . . 111
Table 46. Document revision history . . . 113

List of figures

Figure 1. Logic diagram . . . 10
Figure 2. VFBGA connections (top view through package) . . . 11
Figure 3. M58LR128HC/D memory map . . . 12
Figure 4. Protection Register memory map . . . 33
Figure 5. X-Latency and data output configuration example . . . 45
Figure 6. Wait configuration example . . . 46
Figure 7. AC measurement I/O waveform . . . 57
Figure 8. AC measurement load circuit . . . 58
Figure 9. asynchronous random access Read AC waveforms . . . 61
Figure 10. Synchronous Burst Read AC waveforms . . . 63
Figure 11. Single Synchronous Read AC waveforms . . . 64
Figure 12. Synchronous Burst Read Suspend AC waveforms . . . 65
Figure 13. Clock input AC waveform . . . 66
Figure 14. Write AC waveforms, Write Enable controlled . . . 67
Figure 15. Write AC waveforms, Chip Enable controlled . . . 69
Figure 16. Reset and Power-up AC waveforms . . . 71
Figure 17. VFBGA44 7.7x9mm - 10x4 ball array, 0.50mm pitch, Bottom View Package Outline . . . 72
Figure 18. VFBGA44 daisy chain - package connections (top view through package) . . . 74
Figure 19. VFBGA44 daisy chain - PCB connection proposal (top view through package) . . . 75
Figure 20. Program flowchart and pseudo code . . . 95
Figure 21. Blank Check flowchart and pseudo code . . . 96
Figure 22. Buffer Program flowchart and pseudo code . . . 97
Figure 23. Program Suspend & Resume flowchart and pseudo code . . . 98
Figure 24. Block Erase flowchart and pseudo code . . . 99
Figure 25. Erase Suspend & Resume flowchart and pseudo code . . . 100
Figure 26. Locking operations flowchart and pseudo code . . . 101
Figure 27. Protection Register Program flowchart and pseudo code . . . 102
Figure 28. Buffer Enhanced Factory Program flowchart and pseudo code . . . 103

1 Description

The M58LR128HC/D are 128 Mbit (8 Mbit ×16) non-volatile Flash memories. They may be erased electrically at block level and programmed in-system on a Word-by-Word basis using a 1.7 V to 2.0 V V_{DD} supply for the circuitry and a 1.7 V to 2.0 V V_{DDQ} supply for the Input/Output pins. An optional 9 V V_{PP} power supply is provided to speed up factory programming.

The first sixteen address lines are multiplexed with the Data Input/Output signals on the multiplexed address/data bus ADQ0-ADQ15. The remaining address lines A16-A22 are the Most Significant Bit addresses.

The devices feature an asymmetrical block architecture. The M58LR128HC/D have an array of 131 blocks, and are divided into 8 Mbit banks. There are 15 banks each containing 8 main blocks of 64 KWords, and one parameter bank containing 4 parameter blocks of 16 KWords and 7 main blocks of 64 KWords.

The Multiple Bank Architecture allows Dual Operations, while programming or erasing in one bank, read operations are possible in other banks. Only one bank at a time is allowed to be in program or erase mode. It is possible to perform burst reads that cross bank boundaries. The bank architecture is summarized in *Table 2*, and the memory map is shown in *Figure 3*. The Parameter Blocks are located at the top of the memory address space for the M58LR128HC, and at the bottom for the M58LR128HD.

Each block can be erased separately. Erase can be suspended, in order to perform a program or read operation in any other block, and then resumed. Program can be suspended to read data at any memory location except for the one being programmed, and then resumed. Each block can be programmed and erased over 100 000 cycles using the supply voltage V_{DD}. There is a Buffer Enhanced Factory programming command available to speed up programming.

Program and erase commands are written to the Command Interface of the memory. An internal Program/Erase Controller takes care of the timings necessary for program and erase operations. The end of a program or erase operation can be detected and any error conditions identified in the Status Register. The command set required to control the memory is consistent with JEDEC standards.

The device supports Synchronous Burst Read and Asynchronous Read from all blocks of the memory array; at power-up the device is configured for Asynchronous Read. In Synchronous Burst Read mode, data is output on each clock cycle at frequencies of up to 66 MHz. The Synchronous Burst Read operation can be suspended and resumed.

The device features an Automatic Standby mode. When the bus is inactive during Asynchronous Read operations, the device automatically switches to the Automatic Standby mode. In this condition the power consumption is reduced to the standby value and the outputs are still driven.

The M58LR128HC/D features an instant, individual block locking scheme that allows any block to be locked or unlocked with no latency, enabling instant code and data protection. All blocks have three levels of protection. They can be locked and locked-down individually preventing any accidental programming or erasure. There is an additional hardware protection against program and erase. When $V_{PP} \leq V_{PPLK}$ all blocks are protected against program or erase. All blocks are locked at power-up.

The device includes 17 Protection Registers and 2 Protection Register locks, one for the first Protection Register and the other for the 16 One-Time-Programmable (OTP) Protection Registers of 128 bits each. The first Protection Register is divided into two segments: a 64 bit segment containing a unique device number written by Numonyx, and a 64 bit segment One-Time-Programmable (OTP) by the user. The user programmable segment can be permanently protected. *Figure 4*, shows the Protection Register Memory Map.

The M58LR128HC/D are offered in a VFBGA44, 7.7 x 9 mm, 0.50 mm pitch package. They are supplied with all the bits erased (set to '1').

Figure 1. Logic diagram

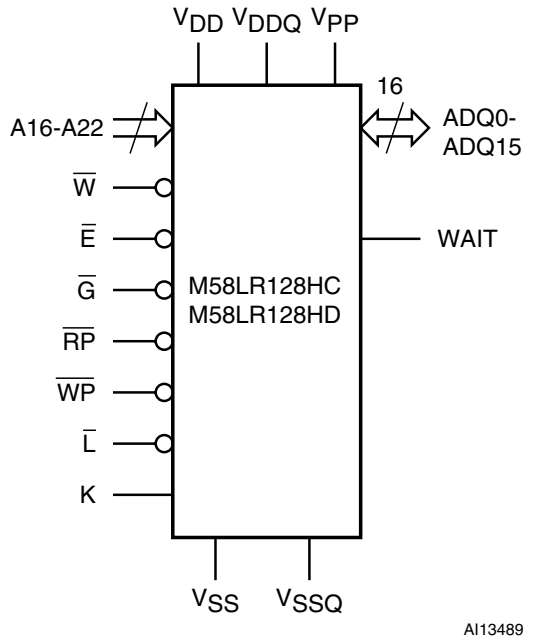

Table 1. Signal names

A16-A22	Address Inputs
ADQ0-ADQ15	Data Input/Outputs or Address Inputs, Command Inputs
$\overline{E}$	Chip Enable
$\overline{G}$	Output Enable
$\overline{W}$	Write Enable
$\overline{RP}$	Reset
$\overline{WP}$	Write Protect
K	Clock
$\overline{L}$	Latch Enable
WAIT	Wait
V_{DD}	Supply Voltage
V_{DDQ}	Supply Voltage for Input/Output Buffers
V_{PP}	Optional Supply Voltage for Fast Program & Erase
V_{SS}	Ground
V_{SSQ}	Ground Input/Output Supply
NC	Not Connected Internally
DU	Do Not Use

Figure 2. VFBGA connections (top view through package)

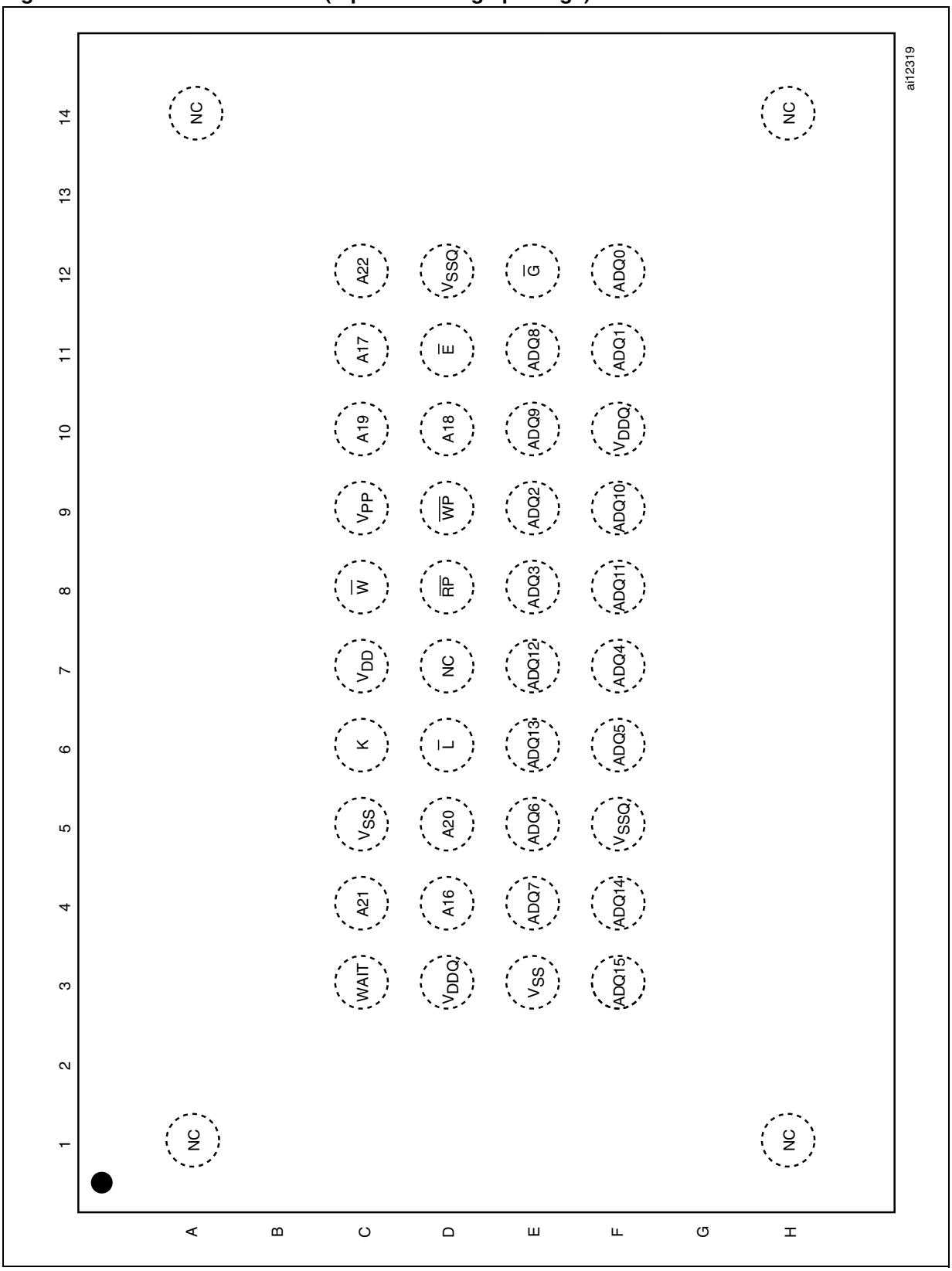

Table 2. M58LR128HC/D bank architecture

Number	Bank Size	Parameter Blocks	Main Blocks
Parameter Bank	8 Mbits	4 blocks of 16 KWords	7 blocks of 64 KWords
Bank 1	8 Mbits	-	8 blocks of 64 KWords
Bank 2	8 Mbits	-	8 blocks of 64 KWords
Bank 3	8 Mbits	-	8 blocks of 64 KWords
⋮	⋮	⋮	⋮
Bank 14	8 Mbits	-	8 blocks of 64 KWords
Bank 15	8 Mbits	-	8 blocks of 64 KWords

Figure 3. M58LR128HC/D memory map

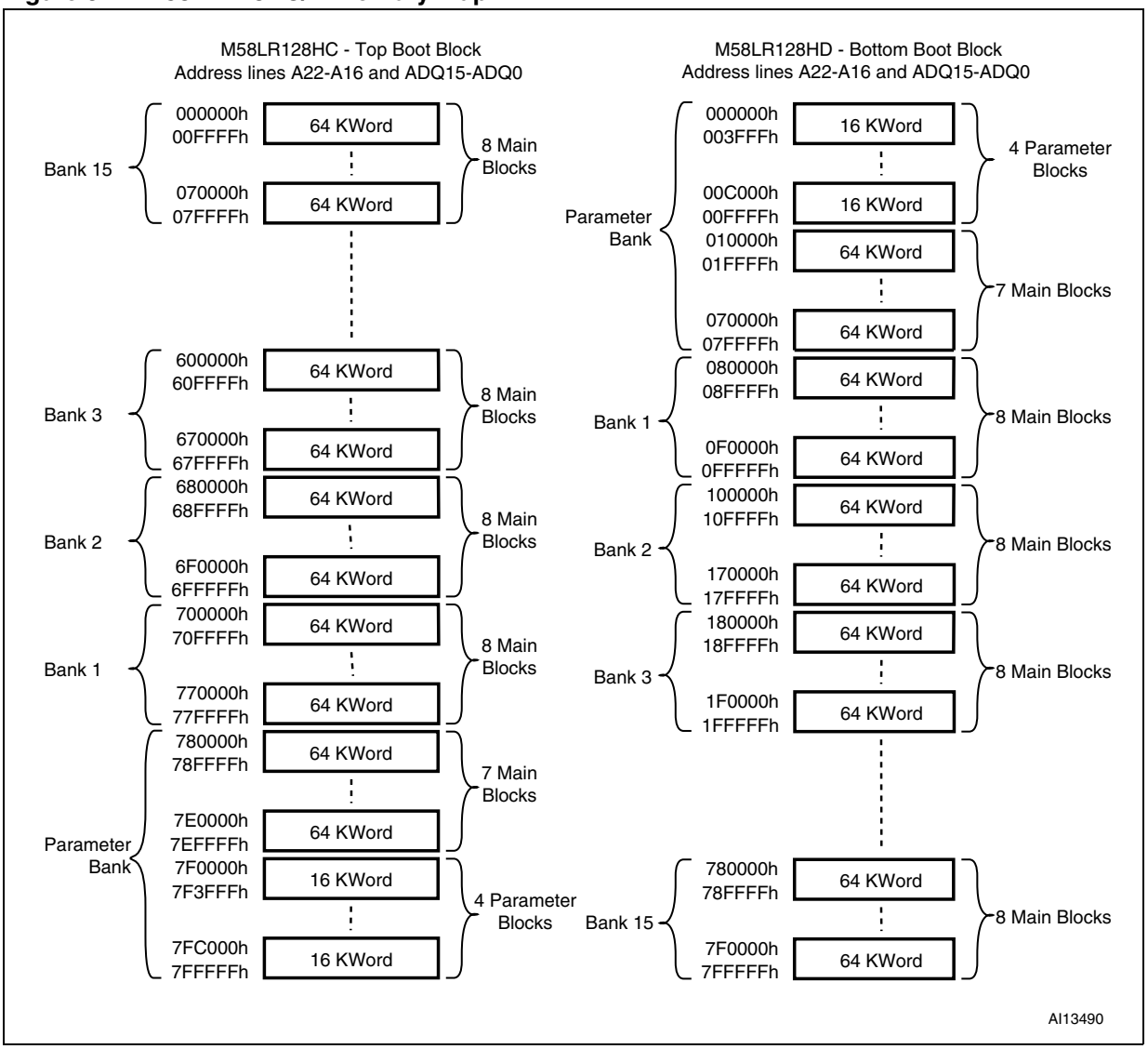

2 Signal descriptions

See *Figure 1: Logic diagram* and *Table 1: Signal names*, for a brief overview of the signals connected to this device.

2.1 Address Inputs (ADQ0-ADQ15 and A16-A22)

The Address Inputs select the cells in the memory array to access during Bus Read operations. During Bus Write operations they control the commands sent to the Command Interface of the Program/Erase Controller.

2.2 Data Input/Output (ADQ0-ADQ15)

The Data I/O output the data stored at the selected address during a Bus Read operation or input a command or the data to be programmed during a Bus Write operation.

2.3 Chip Enable ($\overline{E}$)

The Chip Enable input activates the memory control logic, input buffers, decoders and sense amplifiers. When Chip Enable is at V_{IL} and Reset is at V_{IH} the device is in active mode. When Chip Enable is at V_{IH} the memory is deselected, the outputs are high impedance and the power consumption is reduced to the standby level.

2.4 Output Enable ($\overline{G}$)

The Output Enable input controls data outputs during the Bus Read operation of the memory.

2.5 Write Enable ($\overline{W}$)

The Write Enable input controls the Bus Write operation of the memory's Command Interface. The data and address inputs are latched on the rising edge of Chip Enable or Write Enable whichever occurs first.

2.6 Write Protect ($\overline{WP}$)

Write Protect is an input that gives an additional hardware protection for each block. When Write Protect is at V_{IL}, the Lock-Down is enabled and the protection status of the Locked-Down blocks cannot be changed. When Write Protect is at V_{IH}, the Lock-Down is disabled and the Locked-Down blocks can be locked or unlocked. (refer to *Table 16: Lock status*).

2.7 Reset ($\overline{RP}$)

The Reset input provides a hardware reset of the memory. When Reset is at V_{IL}, the memory is in reset mode: the outputs are high impedance and the current consumption is reduced to the Reset Supply Current I_{DD2}. Refer to *Table 21: DC characteristics - currents*, for the value of I_{DD2}. After Reset all blocks are in the Locked state and the Configuration Register is reset. When Reset is at V_{IH}, the device is in normal operation. Exiting reset mode the device enters asynchronous read mode, but a negative transition of Chip Enable or Latch Enable is required to ensure valid data outputs.

The Reset pin can be interfaced with 3 V logic without any additional circuitry. It can be tied to V_{RPH} (refer to *Table 22: DC characteristics - voltages*).

2.8 Latch Enable ($\overline{L}$)

Latch Enable latches the ADQ0-ADQ15 and A16-A22 address bits on its rising edge. The address latch is transparent when Latch Enable is at V_{IL} and it is inhibited when Latch Enable is at V_{IH}.

2.9 Clock (K)

The clock input synchronizes the memory to the microcontroller during synchronous read operations; the address is latched on a Clock edge (rising or falling, according to the configuration settings) when Latch Enable is at V_{IL}. Clock is ignored during asynchronous read and in write operations.

2.10 Wait (WAIT)

Wait is an output signal used during synchronous read to indicate whether the data on the output bus are valid. This output is high impedance when Chip Enable is at V_{IH} or Reset is at V_{IL}. It can be configured to be active during the wait cycle or one clock cycle in advance. The WAIT signal is forced deasserted when Output Enable is at V_{IH}.

2.11 V_{DD} supply voltage

V_{DD} provides the power supply to the internal core of the memory device. It is the main power supply for all operations (Read, Program and Erase).

2.12 V_{DDQ} supply voltage

V_{DDQ} provides the power supply to the I/O pins and enables all Outputs to be powered independently from V_{DD}. V_{DDQ} can be tied to V_{DD} or can use a separate supply.

2.13 V_{PP} Program supply voltage

V_{PP} is both a control input and a power supply pin. The two functions are selected by the voltage range applied to the pin.

If V_{PP} is kept in a low voltage range (0V to V_{DDQ}) V_{PP} is seen as a control input. In this case a voltage lower than V_{PPLK} gives absolute protection against program or erase, while V_{PP} in the V_{PP1} range enables these functions (see Tables *21* and *22*, DC Characteristics for the relevant values). V_{PP} is only sampled at the beginning of a program or erase; a change in its value after the operation has started does not have any effect and program or erase operations continue.

If V_{PP} is in the range of V_{PPH} it acts as a power supply pin. In this condition V_{PP} must be stable until the Program/Erase algorithm is completed.

2.14 V_{SS} ground

V_{SS} ground is the reference for the core supply. It must be connected to the system ground.

2.15 V_{SSQ} ground

V_{SSQ} ground is the reference for the input/output circuitry driven by V_{DDQ}. V_{SSQ} must be connected to V_{SS}

Note: Each device in a system should have V_{DD}, V_{DDQ} and V_{PP} decoupled with a 0.1 µF ceramic capacitor close to the pin (high frequency, inherently low inductance capacitors should be as close as possible to the package). See Figure 8: AC measurement load circuit. The PCB track widths should be sufficient to carry the required V_{PP} program and erase currents.

3 Bus operations

There are six standard bus operations that control the device. These are Bus Read, Bus Write, Address Latch, Output Disable, Standby and Reset. See *Table 3: Bus operations*, for a summary.

Typically glitches of less than 5ns on Chip Enable or Write Enable are ignored by the memory and do not affect Bus Write operations.

3.1 Bus Read

Bus Read operations are used to output the contents of the Memory Array, the Electronic Signature, the Status Register and the Common Flash Interface. Both Chip Enable and Output Enable must be at V_{IL} in order to perform a read operation. The Chip Enable input should be used to enable the device. Output Enable should be used to gate data onto the output. The data read depends on the previous command written to the memory (see Command Interface section). See Figures *9*, *10* and *11* Read AC Waveforms, and Tables *23* and *24* Read AC Characteristics, for details of when the output becomes valid.

3.2 Bus Write

Bus Write operations write Commands to the memory or latch Input Data to be programmed. A bus write operation is initiated when Chip Enable and Write Enable are at V_{IL} with Output Enable at V_{IH}. Commands, Input Data and Addresses are latched on the rising edge of Write Enable or Chip Enable, whichever occurs first. The addresses must be latched prior to the write operation by toggling Latch Enable (when Chip Enable is at V_{IL}). The Latch Enable must be tied to V_{IH} during the bus write operation.

See Figures *14* and *15*, Write AC Waveforms, and Tables *25* and *26*, Write AC Characteristics, for details of the timing requirements.

3.3 Address Latch

Address latch operations input valid addresses. Both Chip enable and Latch Enable must be at V_{IL} during address latch operations. The addresses are latched on the rising edge of Latch Enable.

3.4 Output Disable

The outputs are high impedance when the Output Enable is at V_{IH}.

3.5 Standby

Standby disables most of the internal circuitry allowing a substantial reduction of the current consumption. The memory is in standby when Chip Enable and Reset are at V_{IH}. The power consumption is reduced to the standby level I_{DD3} and the outputs are set to high impedance, independently from the Output Enable or Write Enable inputs. If Chip Enable switches to V_{IH} during a program or erase operation, the device enters Standby mode when finished.

3.6 Reset

During Reset mode the memory is deselected and the outputs are high impedance. The memory is in Reset mode when Reset is at V_{IL}. The power consumption is reduced to the Reset level, independently from the Chip Enable, Output Enable or Write Enable inputs. If Reset is pulled to V_{SS} during a Program or Erase, this operation is aborted and the memory content is no longer valid.

Table 3. Bus operations(1)

Operation	$\overline{E}$	$\overline{G}$	$\overline{W}$	$\overline{L}$	$\overline{RP}$	WAIT(2)	ADQ15-ADQ0
Bus Read	V_{IL}	V_{IL}	V_{IH}	V_{IH}	V_{IH}		Data Output
Bus Write	V_{IL}	V_{IH}	V_{IL}	V_{IH}	V_{IH}		Data Input
Address Latch	V_{IL}	V_{IH}	X	V_{IL}	V_{IH}		Address Input
Output Disable	V_{IL}	V_{IH}	V_{IH}	V_{IH}	V_{IH}		Hi-Z
Standby	V_{IH}	X	X	X	V_{IH}	Hi-Z	Hi-Z
Reset	X	X	X	X	V_{IL}	Hi-Z	Hi-Z

1. X = Don't care.
2. WAIT signal polarity is configured using the Set Configuration Register command.

4 Command interface

All Bus Write operations to the memory are interpreted by the Command Interface. Commands consist of one or more sequential Bus Write operations. An internal Program/Erase Controller handles all timings and verifies the correct execution of the program and erase commands. The Program/Erase Controller provides a Status Register whose output may be read at any time to monitor the progress or the result of the operation.

The Command Interface is reset to read mode when power is first applied, when exiting from Reset or whenever V_{DD} is lower than V_{LKO}. Command sequences must be followed exactly. Any invalid combination of commands will be ignored.

Refer to *Table 4: Command codes*, *Table 5: Standard commands*, *Table 6: Factory Commands*, and *Appendix D: Command interface state tables*, for a summary of the Command Interface.

Table 4. Command codes

Hex Code	Command
01h	Block Lock Confirm
03h	Set Configuration Register Confirm
10h	Alternative Program Setup
20h	Block Erase Setup
2Fh	Block Lock-Down Confirm
40h	Program Setup
50h	Clear Status Register
60h	Block Lock Setup, Block Unlock Setup, Block Lock Down Setup and Set Configuration Register Setup
70h	Read Status Register
80h	Buffer Enhanced Factory Program Setup
90h	Read Electronic Signature
98h	Read CFI Query
B0h	Program/Erase Suspend
BCh	Blank Check Setup
C0h	Protection Register Program
CBh	Blank Check Confirm
D0h	Program/Erase Resume, Block Erase Confirm, Block Unlock Confirm, Buffer Program or Buffer Enhanced Factory Program Confirm
E8h	Buffer Program
FFh	Read Array

4.1 Read Array command

The Read Array command returns the addressed bank to Read Array mode.

One Bus Write cycle is required to issue the Read Array command. Once a bank is in Read Array mode, subsequent read operations will output the data from the memory array.

A Read Array command can be issued to any banks while programming or erasing in another bank.

If the Read Array command is issued to a bank currently executing a program or erase operation, the bank will return to Read Array mode but the program or erase operation will continue, however the data output from the bank is not guaranteed until the program or erase operation has finished. The read modes of other banks are not affected.

4.2 Read Status Register command

The device contains a Status Register that is used to monitor program or erase operations.

The Read Status Register command is used to read the contents of the Status Register for the addressed bank.

One Bus Write cycle is required to issue the Read Status Register command. Once a bank is in Read Status Register mode, subsequent read operations will output the contents of the Status Register.

The Status Register data is latched on the falling edge of the Chip Enable or Output Enable signals. Either Chip Enable or Output Enable must be toggled to update the Status Register data

The Read Status Register command can be issued at any time, even during program or erase operations. The Read Status Register command will only change the read mode of the addressed bank. The read modes of other banks are not affected. Only Asynchronous Read and Single Synchronous Read operations should be used to read the Status Register. A Read Array command is required to return the bank to Read Array mode.

See *Table 9* for the description of the Status Register Bits.

4.3 Read Electronic Signature command

The Read Electronic Signature command is used to read the Manufacturer and Device Codes, the Lock Status of the addressed bank, the Protection Register, and the Configuration Register.

One Bus Write cycle is required to issue the Read Electronic Signature command. Once a bank is in Read Electronic Signature mode, subsequent read operations in the same bank will output the Manufacturer Code, the Device Code, the Lock Status of the addressed bank, the Protection Register, or the Configuration Register (see *Table 7*).

The Read Electronic Signature command can be issued at any time, even during program or erase operations, except during Protection Register Program operations. Dual operations between the Parameter bank and the Electronic Signature location are not allowed (see *Table 15: Dual operation limitations* for details).

If a Read Electronic Signature command is issued to a bank that is executing a program or erase operation the bank will go into Read Electronic Signature mode. Subsequent Bus Read cycles will output the Electronic Signature data and the Program/Erase controller will continue to program or erase in the background.

The Read Electronic Signature command will only change the read mode of the addressed bank. The read modes of other banks are not affected. Only Asynchronous Read and Single Synchronous Read operations should be used to read the Electronic Signature. A Read Array command is required to return the bank to Read Array mode.

4.4 Read CFI Query command

The Read CFI Query command is used to read data from the Common Flash Interface (CFI).

One Bus Write cycle is required to issue the Read CFI Query command. Once a bank is in Read CFI Query mode, subsequent Bus Read operations in the same bank read from the Common Flash Interface.

The Read CFI Query command can be issued at any time, even during program or erase operations.

If a Read CFI Query command is issued to a bank that is executing a program or erase operation the bank will go into Read CFI Query mode. Subsequent Bus Read cycles will output the CFI data and the Program/Erase controller will continue to program or erase in the background.

The Read CFI Query command will only change the read mode of the addressed bank. The read modes of other banks are not affected. Only Asynchronous Read and Single Synchronous Read operations should be used to read from the CFI. A Read Array command is required to return the bank to Read Array mode. Dual operations between the Parameter Bank and the CFI memory space are not allowed (see *Table 15: Dual operation limitations* for details).

See *Appendix B: Common Flash Interface*, Tables *32*, *33*, *34*, *35*, *36*, *37*, *38*, *39*, *40* and *41* for details on the information contained in the Common Flash Interface memory area.

4.5 Clear Status Register command

The Clear Status Register command can be used to reset (set to ‘0’) all error bits (SR1, 3, 4 and 5) in the Status Register.

One Bus Write cycle is required to issue the Clear Status Register command. The Clear Status Register command does not affect the read mode of the bank.

The error bits in the Status Register do not automatically return to ‘0’ when a new command is issued. The error bits in the Status Register should be cleared before attempting a new program or erase command.

4.6 Block Erase command

The Block Erase command is used to erase a block. It sets all the bits within the selected block to ’1’. All previous data in the block is lost.

If the block is protected then the erase operation will abort, the data in the block will not be changed and the Status Register will output the error.

Two Bus Write cycles are required to issue the command.

- The first bus cycle sets up the Block Erase command.
- The second latches the block address and starts the Program/Erase Controller.

If the second bus cycle is not the Block Erase Confirm code, Status Register bits SR4 and SR5 are set and the command is aborted.

Once the command is issued the bank enters Read Status Register mode and any read operation within the addressed bank will output the contents of the Status Register. A Read Array command is required to return the bank to Read Array mode.

During Block Erase operations the bank containing the block being erased will only accept the Read Array, Read Status Register, Read Electronic Signature, Read CFI Query and the Program/Erase Suspend command, all other commands will be ignored.

The Block Erase operation aborts if Reset, $\overline{RP}$, goes to V_{IL}. As data integrity cannot be guaranteed when the Block Erase operation is aborted, the block must be erased again.

Refer to Dual Operations section for detailed information about simultaneous operations allowed in banks not being erased.

Typical Erase times are given in *Table 17: Program/Erase times and endurance cycles*.

See *Appendix C*, *Figure 24: Block Erase flowchart and pseudo code*, for a suggested flowchart for using the Block Erase command.

4.7 The Blank Check command

The Blank Check command is used to check whether a Main Array Block has been completely erased. Only one Block at a time can be checked. To use the Blank Check command V_{PP} must be equal to V_{PPH}. If V_{PP} is not equal to V_{PPH}, the device ignores the command and no error is shown in the Status Register.

Two bus cycles are required to issue the Blank Check command:

- The first bus cycle writes the Blank Check command (BCh) to any address in the Block to be checked.
- The second bus cycle writes the Blank Check Confirm command (CBh) to any address in the Block to be checked and starts the Blank Check operation.

If the second bus cycle is not Blank Check Confirm, Status Register bits SR4 and SR5 are set to '1' and the command aborts.

Once the command is issued the addressed bank automatically enters the Status Register mode and further reads within the bank output the Status Register contents.

The only operation permitted during Blank Check is Read Status Register. Dual Operations are not supported while a Blank Check operation is in progress. Blank Check operations cannot be suspended and are not allowed while the device is in Program/Erase Suspend.

The SR7 Status Register bit indicates the status of the Blank Check operation in progress: SR7 = '0' means that the Blank Check operation is still ongoing. SR7 = '1' means that the operation is complete.

The SR5 Status Register bit goes High (SR5 = '1') to indicate that the Blank Check operation has failed.

At the end of the operation the bank remains in the Read Status Register mode until another command is written to the Command Interface.

See *Appendix C*, *Figure 21: Blank Check flowchart and pseudo code*, for a suggested flowchart for using the Blank Check command.

Typical Blank Check times are given in *Table 17: Program/Erase times and endurance cycles*.

4.8 Program command

The program command is used to program a single Word to the memory array.

If the block being programmed is protected, then the Program operation will abort, the data in the block will not be changed and the Status Register will output the error.

Two Bus Write cycles are required to issue the Program Command.

- The first bus cycle sets up the Program command.
- The second latches the address and data to be programmed and starts the Program/Erase Controller.

Once the programming has started, read operations in the bank being programmed output the Status Register content.

During a Program operation, the bank containing the Word being programmed will only accept the Read Array, Read Status Register, Read Electronic Signature, Read CFI Query and the Program/Erase Suspend command, all other commands will be ignored. A Read Array command is required to return the bank to Read Array mode.

Refer to Dual Operations section for detailed information about simultaneous operations allowed in banks not being programmed.

Typical Program times are given in *Table 17: Program/Erase times and endurance cycles*.

The Program operation aborts if Reset, $\overline{RP}$, goes to V_{IL}. As data integrity cannot be guaranteed when the Program operation is aborted, the Word must be reprogrammed.

See *Appendix C*, *Figure 20: Program flowchart and pseudo code*, for the flowchart for using the Program command.

4.9 Buffer Program command

The Buffer Program Command makes use of the device's 32-Word Write Buffer to speed up programming. Up to 32 Words can be loaded into the Write Buffer. The Buffer Program command dramatically reduces in-system programming time compared to the standard non-buffered Program command.

Four successive steps are required to issue the Buffer Program command.

1. The first Bus Write cycle sets up the Buffer Program command. The setup code can be addressed to any location within the targeted block.

After the first Bus Write cycle, read operations in the bank will output the contents of the Status Register. Status Register bit SR7 should be read to check that the buffer is available (SR7 = 1). If the buffer is not available (SR7 = 0), re-issue the Buffer Program command to update the Status Register contents.

2. The second Bus Write cycle sets up the number of Words to be programmed. Value n is written to the same block address, where n+1 is the number of Words to be programmed.
3. Use n+1 Bus Write cycles to load the address and data for each Word into the Write Buffer. Addresses must lie within the range from the start address to the start address + n, where the start address is the location of the first data to be programmed. Optimum performance is obtained when the start address corresponds to a 32 Word boundary.
4. The final Bus Write cycle confirms the Buffer Program command and starts the program operation.

All the addresses used in the Buffer Program operation must lie within the same block.

Invalid address combinations or failing to follow the correct sequence of Bus Write cycles will set an error in the Status Register and abort the operation without affecting the data in the memory array.

If the Status Register bits SR4 and SR5 are set to '1', the Buffer Program Command is not accepted. Clear the Status Register before re-issuing the command.

If the block being programmed is protected an error will be set in the Status Register and the operation will abort without affecting the data in the memory array.

During Buffer Program operations the bank being programmed will only accept the Read Array, Read Status Register, Read Electronic Signature, Read CFI Query and the Program/Erase Suspend command, all other commands will be ignored.

Refer to Dual Operations section for detailed information about simultaneous operations allowed in banks not being programmed.

See *Appendix C*, *Figure 22: Buffer Program flowchart and pseudo code*, for a suggested flowchart on using the Buffer Program command.

4.10 Buffer Enhanced Factory Program command

The Buffer Enhanced Factory Program command has been specially developed to speed up programming in manufacturing environments where the programming time is critical.

It is used to program one or more Write Buffer(s) of 32 Words to a block. Once the device enters Buffer Enhanced Factory Program mode, the Write Buffer can be reloaded any number of times as long as the address remains within the same block. Only one block can be programmed at a time.

If the block being programmed is protected, then the Program operation will abort, the data in the block will not be changed and the Status Register will output the error.

The use of the Buffer Enhanced Factory Program command requires certain operating conditions:

- V_{PP} must be set to V_{PPH}
- V_{DD} must be within operating range
- Ambient temperature T_A must be 30°C ± 10°C
- The targeted block must be unlocked
- The start address must be aligned with the start of a 32 Word buffer boundary
- The address must remain the Start Address throughout programming.

Dual operations are not supported during the Buffer Enhanced Factory Program operation and the command cannot be suspended.

The Buffer Enhanced Factory Program Command consists of three phases: the Setup Phase, the Program and Verify Phase, and the Exit Phase, Please refer to *Table 6: Factory Commands* for detail information.

4.10.1 Setup Phase

The Buffer Enhanced Factory Program command requires two Bus Write cycles to initiate the command.

- The first Bus Write cycle sets up the Buffer Enhanced Factory Program command.
- The second Bus Write cycle confirms the command.

After the confirm command is issued, read operations output the contents of the Status Register. The read Status Register command must not be issued as it will be interpreted as data to program.

The Status Register P/E.C. Bit SR7 should be read to check that the P/E.C. is ready to proceed to the next phase.

If an error is detected, SR4 goes high (set to ‘1’) and the Buffer Enhanced Factory Program operation is terminated. See Status Register section for details on the error.

4.10.2 Program and Verify Phase

The Program and Verify Phase requires 32 cycles to program the 32 Words to the Write Buffer. The data is stored sequentially, starting at the first address of the Write Buffer, until the Write Buffer is full (32 Words). To program less than 32 Words, the remaining Words should be programmed with FFFFh.

Three successive steps are required to issue and execute the Program and Verify Phase of the command.

1. Use one Bus Write operation to latch the Start Address and the first Word to be programmed. The Status Register Bank Write Status bit SR0 should be read to check that the P/E.C. is ready for the next Word.
2. Each subsequent Word to be programmed is latched with a new Bus Write operation. The address must remain the Start Address as the P/E.C. increments the address location.If any address that is not in the same block as the Start Address is given, the Program and Verify Phase terminates. Status Register bit SR0 should be read between each Bus Write cycle to check that the P/E.C. is ready for the next Word.
3. Once the Write Buffer is full, the data is programmed sequentially to the memory array. After the program operation the device automatically verifies the data and reprograms if necessary.

The Program and Verify phase can be repeated, without re-issuing the command, to program additional 32 Word locations as long as the address remains in the same block.

4. Finally, after all Words, or the entire block have been programmed, write one Bus Write operation to any address outside the block containing the Start Address, to terminate Program and Verify Phase.

Status Register bit SR0 must be checked to determine whether the program operation is finished. The Status Register may be checked for errors at any time but it must be checked after the entire block has been programmed.

4.10.3 Exit Phase

Status Register P/E.C. bit SR7 set to ‘1’ indicates that the device has exited the Buffer Enhanced Factory Program operation and returned to Read Status Register mode. A full Status Register check should be done to ensure that the block has been successfully programmed. See the section on the Status Register for more details.

For optimum performance the Buffer Enhanced Factory Program command should be limited to a maximum of 100 program/erase cycles per block. If this limit is exceeded the internal algorithm will continue to work properly but some degradation in performance is possible. Typical program times are given in *Table 17*.

See *Appendix C*, *Figure 28: Buffer Enhanced Factory Program flowchart and pseudo code*, for a suggested flowchart on using the Buffer Enhanced Factory Program command.

4.11 Program/Erase Suspend command

The Program/Erase Suspend command is used to pause a Program or Block Erase operation. The command can be addressed to any bank.

The Program/Erase Resume command is required to restart the suspended operation.

One bus write cycle is required to issue the Program/Erase Suspend command. Once the Program/Erase Controller has paused bits SR7, SR6 and/ or SR2 of the Status Register will be set to '1'.

The following commands are accepted during Program/Erase Suspend:

- Program/Erase Resume
- Read Array (data from erase-suspended block or program-suspended Word is not valid)
- Read Status Register
- Read Electronic Signature
- Read CFI Query.

Additionally, if the suspended operation was a Block Erase then the following commands are also accepted:

- Clear Status Register
- Set Configuration Register
- Program (except in erase-suspended block)
- Buffer Program (except in erase suspended blocks)
- Block Lock
- Block Lock-Down
- Block Unlock.

During an erase suspend the block being erased can be protected by issuing the Block Lock or Block Lock-Down commands. When the Program/Erase Resume command is issued the operation will complete.

It is possible to accumulate multiple suspend operations. For example: suspend an erase operation, start a program operation, suspend the program operation, then read the array.

If a Program command is issued during a Block Erase Suspend, the erase operation cannot be resumed until the program operation has completed.

The Program/Erase Suspend command does not change the read mode of the banks. If the suspended bank was in Read Status Register, Read Electronic signature or Read CFI Query mode the bank remains in that mode and outputs the corresponding data.

Refer to Dual Operations section for detailed information about simultaneous operations allowed during Program/Erase Suspend.

During a Program/Erase Suspend, the device can be placed in standby mode by taking Chip Enable to V_{IH}. Program/erase is aborted if Reset, $\overline{RP}$, goes to V_{IL}.

See *Appendix C*, *Figure 23: Program Suspend & Resume flowchart and pseudo code*, and *Figure 25: Erase Suspend & Resume flowchart and pseudo code*, for flowcharts for using the Program/Erase Suspend command.

4.12 Program/Erase Resume command

The Program/Erase Resume command is used to restart the program or erase operation suspended by the Program/Erase Suspend command. One Bus Write cycle is required to issue the command. The command can be issued to any address.

The Program/Erase Resume command does not change the read mode of the banks. If the suspended bank was in Read Status Register, Read Electronic signature or Read CFI Query mode the bank remains in that mode and outputs the corresponding data.

If a Program command is issued during a Block Erase Suspend, then the erase cannot be resumed until the program operation has completed.

See *Appendix C*, *Figure 23: Program Suspend & Resume flowchart and pseudo code*, and *Figure 25: Erase Suspend & Resume flowchart and pseudo code*, for flowcharts for using the Program/Erase Resume command.

4.13 Protection Register Program command

The Protection Register Program command is used to program the user One-Time-Programmable (OTP) segments of the Protection Register and the two Protection Register Locks.

The device features 16 OTP segments of 128 bits and one OTP segment of 64 bits, as shown in *Figure 4: Protection Register memory map*.

The segments are programmed one Word at a time. When shipped all bits in the segment are set to ‘1’. The user can only program the bits to ‘0’.

Two Bus Write cycles are required to issue the Protection Register Program command.

- The first bus cycle sets up the Protection Register Program command.
- The second latches the address and data to be programmed to the Protection Register and starts the Program/Erase Controller.

Read operations to the bank being programmed output the Status Register content after the program operation has started.

Attempting to program a previously protected Protection Register will result in a Status Register error.

The Protection Register Program cannot be suspended. Dual operations between the Parameter Bank and the Protection Register memory space are not allowed (see *Table 15: Dual operation limitations* for details)

The two Protection Register Locks are used to protect the OTP segments from further modification. The protection of the OTP segments is not reversible. Refer to *Figure 4: Protection Register memory map*, and *Table 8: Protection Register locks*, for details on the Lock bits.

See *Appendix C*, *Figure 27: Protection Register Program flowchart and pseudo code*, for a flowchart for using the Protection Register Program command.

4.14 Set Configuration Register command

The Set Configuration Register command is used to write a new value to the Configuration Register.

Two Bus Write cycles are required to issue the Set Configuration Register command.

- The first cycle sets up the Set Configuration Register command and the address corresponding to the Configuration Register content.
- The second cycle writes the Configuration Register data and the confirm command.

The Configuration Register data must be written as an address during the bus write cycles, that is ADQ0 = CR0, ADQ1 = CR1, …, ADQ15 = CR15. Addresses A16-Amax are ignored.

Read operations output the array content after the Set Configuration Register command is issued.

The Read Electronic Signature command is required to read the updated contents of the Configuration Register.

4.15 Block Lock command

The Block Lock command is used to lock a block and prevent program or erase operations from changing the data in it. All blocks are locked after power-up or reset.

Two Bus Write cycles are required to issue the Block Lock command.

- The first bus cycle sets up the Block Lock command.
- The second Bus Write cycle latches the block address and locks the block.

The lock status can be monitored for each block using the Read Electronic Signature command. *Table 16* shows the Lock Status after issuing a Block Lock command.

Once set, the Block Lock bits remain set even after a hardware reset or power-down/power-up. They are cleared by a Block Unlock command.

Refer to the section, Block Locking, for a detailed explanation. See *Appendix C*, *Figure 26: Locking operations flowchart and pseudo code*, for a flowchart for using the Lock command.

4.16 Block Unlock command

The Block Unlock command is used to unlock a block, allowing the block to be programmed or erased.

Two Bus Write cycles are required to issue the Block Unlock command.

- The first bus cycle sets up the Block Unlock command.
- The second Bus Write cycle latches the block address and unlocks the block.

The lock status can be monitored for each block using the Read Electronic Signature command. *Table 16* shows the protection status after issuing a Block Unlock command.

Refer to the section, Block Locking, for a detailed explanation and *Appendix C*, *Figure 26: Locking operations flowchart and pseudo code*, for a flowchart for using the Block Unlock command.

4.17 Block Lock-Down command

The Block Lock-Down command is used to lock-down a locked or unlocked block.

A locked-down block cannot be programmed or erased. The lock status of a locked-down block cannot be changed when $\overline{WP}$ is low, V_{IL}. When $\overline{WP}$ is high, V_{IH}, the lock-down function is disabled and the locked blocks can be individually unlocked by the Block Unlock command.

Two Bus Write cycles are required to issue the Block Lock-Down command.

- The first bus cycle sets up the Block Lock-Down command.
- The second Bus Write cycle latches the block address and locks-down the block.

The lock status can be monitored for each block using the Read Electronic Signature command.

Locked-Down blocks revert to the locked (and not locked-down) state when the device is reset on power-down. *Table 16* shows the Lock Status after issuing a Block Lock-Down command.

Refer to the section, Block Locking, for a detailed explanation and *Appendix C*, *Figure 26: Locking operations flowchart and pseudo code*, for a flowchart for using the Lock-Down command.

Table 5. Standard commands(1)

Commands	Cycles	Bus operations					
		1st cycle			2nd cycle		
		Op.	Add	Data	Op.	Add	Data
Read Array	1+	Write	BKA	FFh	Read	WA	RD
Read Status Register	1+	Write	BKA	70h	Read	BKA(2)	SRD
Read Electronic Signature	1+	Write	BKA	90h	Read	BKA(2)	ESD
Read CFI Query	1+	Write	BKA	98h	Read	BKA(2)	QD
Clear Status Register	1	Write	X	50h			
Block Erase	2	Write	BKA or BA(3)	20h	Write	BA	D0h
Program	2	Write	BKA or WA(3)	40h or 10h	Write	WA	PD
Buffer Program(4)	n+4	Write	BA	E8h	Write	BA	n
		Write	PA_1	PD_1	Write	PA_2	PD_2
		Write	PA_{n+1}	PD_{n+1}	Write	X	D0h
Program/Erase Suspend	1	Write	X	B0h			
Program/Erase Resume	1	Write	X	D0h			
Protection Register Program	2	Write	PRA	C0h	Write	PRA	PRD
Set Configuration Register	2	Write	CRD	60h	Write	CRD	03h
Block Lock	2	Write	BKA or BA(3)	60h	Write	BA	01h
Block Unlock	2	Write	BKA or BA(3)	60h	Write	BA	D0h
Block Lock-Down	2	Write	BKA or BA(3)	60h	Write	BA	2Fh

1. X = Don't Care, WA = Word Address in targeted bank, RD = Read Data, SRD = Status Register Data, ESD = Electronic Signature Data, QD = Query Data, BA = Block Address, BKA = Bank Address, PD = Program Data, PRA = Protection Register Address, PRD = Protection Register Data, CRD = Configuration Register Data.
2. Must be same bank as in the first cycle. The signature addresses are listed in *Table 7*.
3. Any address within the bank can be used.
4. n+1 is the number of Words to be programmed.

Table 6. Factory Commands

Command	Phase	Cycles	Bus Write operations(1)									
			1st		2nd		3rd		Final -1		Final	
			Add	Data	Add	Data	Add	Data	Add	Data	Add	Data
Blank Check		2	BA	BCh	BA	CBh						
Buffer Enhanced Factory Program	Setup	2	BKA or WA(2)	80h	WA_1	D0h						
	Program/ Verify(3)	≥32	WA_1	PD_1	WA_1	PD_2	WA_1	PD_3	WA_1	PD_{31}	WA_1	PD_{32}
	Exit	1	NOT BA_1(4)	X								

1. WA = Word Address in targeted bank, BKA = Bank Address, PD = Program Data, BA = Block Address, X = Don't Care.
2. Any address within the bank can be used.
3. The Program/Verify phase can be executed any number of times as long as the data is to be programmed to the same block.
4. WA_1 is the Start Address, NOT BA_1 = Not Block Address of WA_1.

Table 7. Electronic signature codes

Code		Address (h)	Data (h)
Manufacturer Code		Bank Address + 00	0020
Device Code	Top	Bank Address + 01	882E (M58LR128HC)
	Bottom	Bank Address + 01	882F (M58LR128HD)
Block Protection	Locked	Block Address + 02	0001
	Unlocked		0000
	Locked and Locked-Down		0003
	Unlocked and Locked-Down		0002
Die Revision Code		Bank Address + 03	DRC(1)
Configuration Register		Bank Address + 05	CR(1)
Protection Register PR0 Lock	Numonyx Factory Default	Bank Address + 80	0002
	OTP Area Permanently Locked		0000
Protection Register PR0		Bank Address + 81 Bank Address + 84	Unique Device Number
		Bank Address + 85 Bank Address + 88	OTP Area
Protection Register PR1 through PR16 Lock		Bank Address + 89	PRLD(1)
Protection Registers PR1-PR16		Bank Address + 8A Bank Address + 109	OTP Area

1. CR = Configuration Register, PRLD = Protection Register Lock Data, DRC = Die Revision Code.

Figure 4. Protection Register memory map

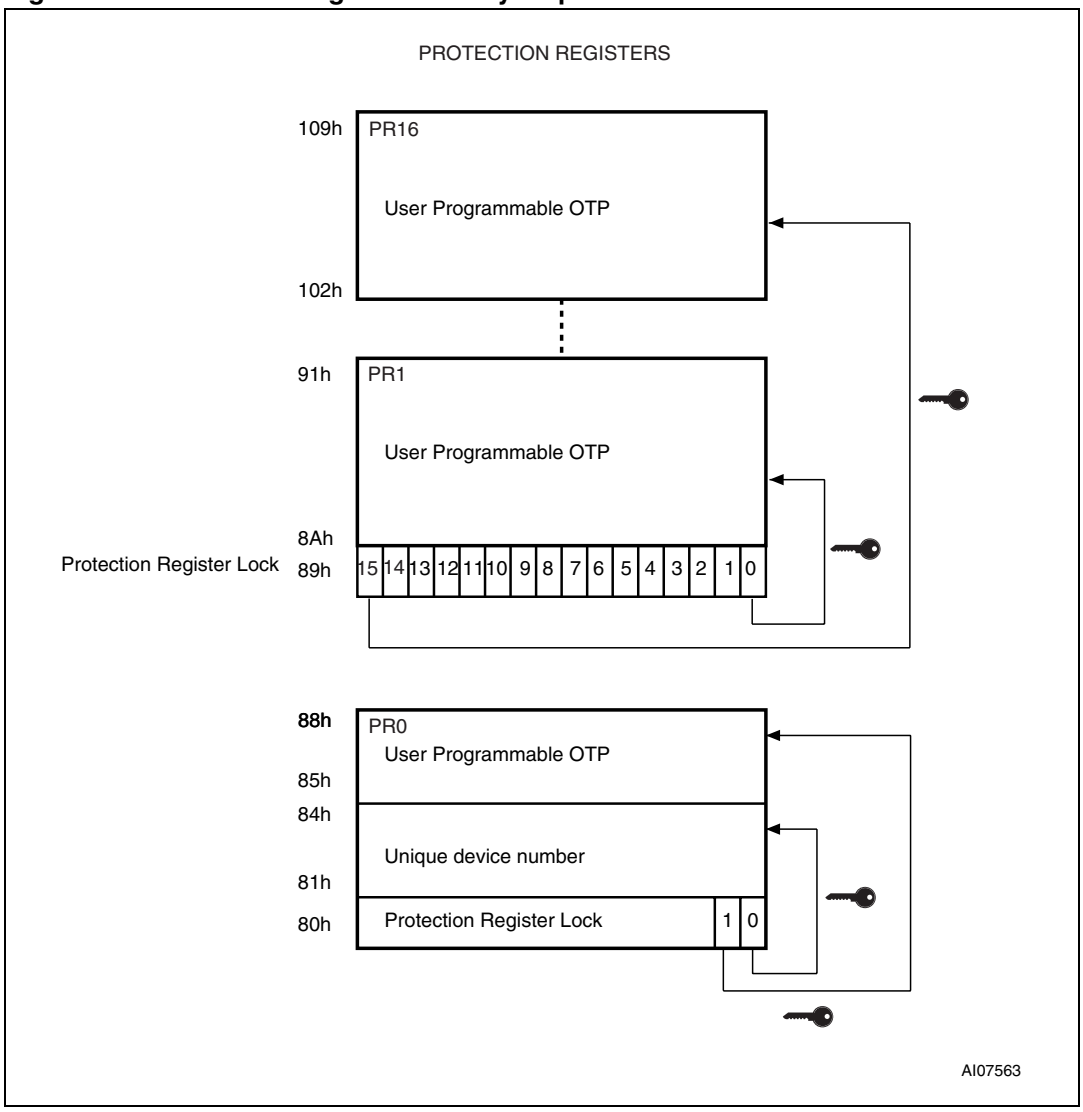

Table 8. Protection Register locks

Lock			Description
Number	Address	Bits	
Lock 1	80h	Bit 0	preprogrammed to protect Unique Device Number, address 81h to 84h in PR0
		Bit 1	protects 64bits of OTP segment, address 85h to 88h in PR0
		Bits 2 to 15	reserved
Lock 2	89h	Bit 0	protects 128bits of OTP segment PR1
		Bit 1	protects 128bits of OTP segment PR2
		Bit 2	protects 128bits of OTP segment PR3
		⋮	⋮
		Bit 13	protects 128bits of OTP segment PR14
		Bit 14	protects 128bits of OTP segment PR15
		Bit 15	protects 128bits of OTP segment PR16

5 Status Register

The Status Register provides information on the current or previous program or erase operations. Issue a Read Status Register command to read the contents of the Status Register, refer to Read Status Register Command section for more details. To output the contents, the Status Register is latched and updated on the falling edge of the Chip Enable or Output Enable signals and can be read until Chip Enable or Output Enable returns to V_{IH}. The Status Register can only be read using single Asynchronous or Single Synchronous reads. Bus Read operations from any address within the bank, always read the Status Register during program and erase operations.

The various bits convey information about the status and any errors of the operation. Bits SR7, SR6, SR2 and SR0 give information on the status of the device and are set and reset by the device. Bits SR5, SR4, SR3 and SR1 give information on errors, they are set by the device but must be reset by issuing a Clear Status Register command or a hardware reset. If an error bit is set to '1' the Status Register should be reset before issuing another command.

The bits in the Status Register are summarized in *Table 9: Status Register bits*. Refer to *Table 9* in conjunction with the following text descriptions.

5.1 Program/Erase Controller status bit (SR7)

The Program/Erase Controller Status bit indicates whether the Program/Erase Controller is active or inactive in any bank.

When the Program/Erase Controller Status bit is Low (set to '0'), the Program/Erase Controller is active; when the bit is High (set to '1'), the Program/Erase Controller is inactive, and the device is ready to process a new command.

The Program/Erase Controller Status bit is Low immediately after a Program/Erase Suspend command is issued until the Program/Erase Controller pauses. After the Program/Erase Controller pauses the bit is High.

5.2 Erase Suspend status bit (SR6)

The Erase Suspend Status bit indicates that an erase operation has been suspended in the addressed block. When the Erase Suspend Status bit is High (set to '1'), a Program/Erase Suspend command has been issued and the memory is waiting for a Program/Erase Resume command.

The Erase Suspend Status bit should only be considered valid when the Program/Erase Controller Status bit is High (Program/Erase Controller inactive). SR6 is set within the Erase Suspend Latency time of the Program/Erase Suspend command being issued therefore the memory may still complete the operation rather than entering the Suspend mode.

When a Program/Erase Resume command is issued the Erase Suspend Status bit returns Low.

5.3 Erase/Blank Check status bit (SR5)

The Erase/Blank Check Status bit is used to identify if there was an error during a Block Erase operation. When the Erase/Blank Check Status bit is High (set to ‘1’), the Program/Erase Controller has applied the maximum number of pulses to the block and still failed to verify that it has erased correctly.

The Erase/Blank Check Status bit should be read once the Program/Erase Controller Status bit is High (Program/Erase Controller inactive).

The Erase/Blank Check Status bit is also used to indicate whether an error occurred during the Blank Check operation: if the data at one or more locations in the block where the Blank Check command has been issued is different from FFFFh, SR5 is set to '1'.

Once set High, the Erase/Blank Check Status bit must be set Low by a Clear Status Register command or a hardware reset before a new erase command is issued, otherwise the new command will appear to fail.

5.4 Program status bit (SR4)

The Program Status bit is used to identify if there was an error during a program operation.

The Program Status bit should be read once the Program/Erase Controller Status bit is High (Program/Erase Controller inactive).

When the Program Status bit is High (set to ‘1’), the Program/Erase Controller has applied the maximum number of pulses to the Word and still failed to verify that it has programmed correctly.

Attempting to program a '1' to an already programmed bit while $V_{PP} = V_{PPH}$ will also set the Program Status bit High. If V_{PP} is different from V_{PPH}, SR4 remains Low (set to '0') and the attempt is not shown.

Once set High, the Program Status bit must be set Low by a Clear Status Register command or a hardware reset before a new program command is issued, otherwise the new command will appear to fail.

5.5 V_{PP} status bit (SR3)

The V_{PP} Status bit is used to identify an invalid voltage on the V_{PP} pin during program and erase operations. The V_{PP} pin is only sampled at the beginning of a program or erase operation. Program and erase operations are not guaranteed if V_{PP} becomes invalid during an operation

When the V_{PP} Status bit is Low (set to ‘0’), the voltage on the V_{PP} pin was sampled at a valid voltage.

When the V_{PP} Status bit is High (set to ‘1’), the V_{PP} pin has a voltage that is below the V_{PP} Lockout Voltage, V_{PPLK}, the memory is protected and program and erase operations cannot be performed.

Once set High, the V_{PP} Status bit must be set Low by a Clear Status Register command or a hardware reset before a new program or erase command is issued, otherwise the new command will appear to fail.

5.6 Program Suspend status bit (SR2)

The Program Suspend Status bit indicates that a program operation has been suspended in the addressed block. The Program Suspend Status bit should only be considered valid when the Program/Erase Controller Status bit is High (Program/Erase Controller inactive).

When the Program Suspend Status bit is High (set to ‘1’), a Program/Erase Suspend command has been issued and the memory is waiting for a Program/Erase Resume command.

SR2 is set within the Program Suspend Latency time of the Program/Erase Suspend command being issued therefore the memory may still complete the operation rather than entering the Suspend mode.

When a Program/Erase Resume command is issued the Program Suspend Status bit returns Low.

5.7 Block Protection status bit (SR1)

The Block Protection Status bit is used to identify if a Program or Block Erase operation has tried to modify the contents of a locked or locked-down block.

When the Block Protection Status bit is High (set to ‘1’), a program or erase operation has been attempted on a locked or locked-down block

Once set High, the Block Protection Status bit must be set Low by a Clear Status Register command or a hardware reset before a new program or erase command is issued, otherwise the new command will appear to fail.

5.8 Bank Write/Multiple Word Program status bit (SR0)

The Bank Write Status bit indicates whether the addressed bank is programming or erasing. In Buffer Enhanced Factory Program mode the Multiple Word Program bit shows if the device is ready to accept a new Word to be programmed to the memory array.

The Bank Write Status bit should only be considered valid when the Program/Erase Controller Status SR7 is Low (set to ‘0’).

When both the Program/Erase Controller Status bit and the Bank Write Status bit are Low (set to ‘0’), the addressed bank is executing a program or erase operation. When the Program/Erase Controller Status bit is Low (set to ‘0’) and the Bank Write Status bit is High (set to ‘1’), a program or erase operation is being executed in a bank other than the one being addressed.

In Buffer Enhanced Factory Program mode if Multiple Word Program Status bit is Low (set to ‘0’), the device is ready for the next Word, if the Multiple Word Program Status bit is High (set to ‘1’) the device is not ready for the next Word.

For further details on how to use the Status Register, see the Flowcharts and Pseudocodes provided in *Appendix C*.

Table 9. Status Register bits

Bit	Name	Type	Logic Level(1)	Definition	
SR7	P/E.C. Status	Status	'1'	Ready	
			'0'	Busy	
SR6	Erase Suspend Status	Status	'1'	Erase Suspended	
			'0'	Erase In progress or Completed	
SR5	Erase/Blank Check Status	Error	'1'	Erase/Blank Check Error	
			'0'	Erase/Blank Check Success	
SR4	Program Status	Error	'1'	Program Error	
			'0'	Program Success	
SR3	V_{PP} Status	Error	'1'	V_{PP} Invalid, Abort	
			'0'	V_{PP} OK	
SR2	Program Suspend Status	Status	'1'	Program Suspended	
			'0'	Program In Progress or Completed	
SR1	Block Protection Status	Error	'1'	Program/Erase on protected Block, Abort	
			'0'	No operation to protected blocks	
SR0	Bank Write Status	Status	'1'	SR7 = ‘1’	Not Allowed
				SR7 = ‘0’	Program or erase operation in a bank other than the addressed bank
			'0'	SR7 = ‘1’	No Program or erase operation in the device
				SR7 = ‘0’	Program or erase operation in addressed bank
	Multiple Word Program Status (Buffer Enhanced Factory Program mode)	Status	'1'	SR7 = ‘1’	Not Allowed
				SR7 = ‘0’	the device is NOT ready for the next Buffer loading or is going to exit the BEFP mode
			'0'	SR7 = ‘1’	the device has exited the BEFP mode
				SR7 = ‘0’	the device is ready for the next Buffer loading

1. Logic level '1' is High, '0' is Low.

6 Configuration Register

The Configuration Register is used to configure the type of bus access that the memory will perform. Refer to Read Modes section for details on read operations.

The Configuration Register is set through the Command Interface using the Set Configuration Register command. After a reset or power-up the device is configured for asynchronous read (CR15 = 1). The Configuration Register bits are described in *Table 11* They specify the selection of the burst length, burst type, burst X latency and the read operation. Refer to Figures *5* and *6* for examples of synchronous burst configurations.

6.1 Read Select bit (CR15)

The Read Select bit, CR15, is used to switch between Asynchronous and Synchronous Read operations.

When the Read Select bit is set to '1', read operations are asynchronous; when the Read Select bit is set to '0', read operations are synchronous.

Synchronous Burst Read is supported in both parameter and main blocks and can be performed across banks.

On reset or power-up the Read Select bit is set to '1' for asynchronous access.

6.2 X-Latency bits (CR13-CR11)

The X-Latency bits are used during Synchronous Read operations to set the number of clock cycles between the address being latched and the first data becoming available. Refer to *Figure 5: X-Latency and data output configuration example*.

For correct operation the X-Latency bits can only assume the values in *Table 11: Configuration Register*.

Table 10 shows how to set the X-Latency parameter, taking into account the speed class of the device and the Frequency used to read the Flash memory in Synchronous mode.

Table 10. X-latency settings

fmax	$t_K$min	X-Latency min
30 MHz	33 ns	2
40 MHz	25 ns	3
54 MHz	19 ns	4
66 MHz	15 ns	4

6.3 Wait Polarity bit (CR10)

The Wait Polarity bit is used to set the polarity of the Wait signal used in Synchronous Burst Read mode. During Synchronous Burst Read mode the Wait signal indicates whether the data output are valid or a WAIT state must be inserted.

When the Wait Polarity bit is set to ‘0’ the Wait signal is active Low. When the Wait Polarity bit is set to ‘1’ the Wait signal is active High.

6.4 Data Output Configuration bit (CR9)

The Data Output Configuration bit is used to configure the output to remain valid for either one or two clock cycles during synchronous mode.

When the Data Output Configuration Bit is ’0’ the output data is valid for one clock cycle, when the Data Output Configuration Bit is ’1’ the output data is valid for two clock cycles.

The Data Output Configuration must be configured using the following condition:

- $t_K > t_{KQV} + t_{QVK_CPU}$

where

- t_K is the clock period
- t_{QVK_CPU} is the data setup time required by the system CPU
- t_{KQV} is the clock to data valid time.

If this condition is not satisfied, the Data Output Configuration bit should be set to ‘1’ (two clock cycles). Refer to *Figure 5: X-Latency and data output configuration example*.

6.5 Wait Configuration bit (CR8)

The Wait Configuration bit is used to control the timing of the Wait output pin, WAIT, in Synchronous Burst Read mode.

When WAIT is asserted, Data is Not Valid and when WAIT is deasserted, Data is Valid.

When the Wait Configuration bit is Low (set to ’0’) the Wait output pin is asserted during the WAIT state. When the Wait Configuration bit is High (set to ’1’), the Wait output pin is asserted one data cycle before the WAIT state.

6.6 Burst type bit (CR7)

The Burst Type bit determines the sequence of addresses read during Synchronous Burst Reads.

The Burst Type bit is High (set to ’1’), as the memory outputs from sequential addresses only.

See *Table 12: Burst type definition*, for the sequence of addresses output from a given starting address in sequential mode.

6.7 Valid Clock edge bit (CR6)

The Valid Clock Edge bit, CR6, is used to configure the active edge of the Clock, K, during synchronous read operations. When the Valid Clock Edge bit is Low (set to ’0’) the falling edge of the Clock is the active edge. When the Valid Clock Edge bit is High (set to ’1’) the rising edge of the Clock is the active edge.

6.8 Wrap burst bit (CR3)

The Wrap Burst bit, CR3, is used to select between wrap and no wrap. Synchronous burst reads can be confined inside the 4, 8 or 16 Word boundary (wrap) or overcome the boundary (no wrap).

When the Wrap Burst bit is Low (set to ‘0’) the burst read wraps. When it is High (set to ‘1’) the burst read does not wrap.

6.9 Burst length bits (CR2-CR0)

The Burst Length bits are used to set the number of Words to be output during a Synchronous Burst Read operation as result of a single address latch cycle.

They can be set for 4 Words, 8 Words, 16 Words or continuous burst, where all the Words are read sequentially. In continuous burst mode the burst sequence can cross bank boundaries.

In continuous burst mode, in 4, 8 or 16 Words no-wrap, depending on the starting address, the device asserts the WAIT signal to indicate that a delay is necessary before the data is output.

If the starting address is shifted by 1, 2 or 3 positions from the four-Word boundary, WAIT is asserted for 1, 2 or 3 clock cycles, respectively, when the burst sequence crosses the first 16-Word boundary, to indicate that the device needs an internal delay to read the successive Words in the array. WAIT will be asserted only once during a continuous burst access. See also *Table 12: Burst type definition*.

CR14, CR5 and **CR4** are reserved for future use.

Table 11. Configuration Register

Bit	Description	Value	Description
CR15	Read Select	0	Synchronous Read
		1	Asynchronous Read (Default at power-on)
CR14	Reserved		
CR13-CR11	X-Latency	010	2 clock latency(1)
		011	3 clock latency
		100	4 clock latency
		101	5 clock latency
		110	6 clock latency
		111	7 clock latency (default)
		Other configurations reserved	
CR10	Wait Polarity	0	WAIT is active Low (default)
		1	WAIT is active High
CR9	Data Output Configuration	0	Data held for one clock cycle
		1	Data held for two clock cycles (default)(1)
CR8	Wait Configuration	0	WAIT is active during WAIT state (default)
		1	WAIT is active one data cycle before WAIT state(1)
CR7	Burst Type	0	Reserved
		1	Sequential (default)
CR6	Valid Clock Edge	0	Falling Clock edge
		1	Rising Clock edge (default)
CR5-CR4	Reserved		
CR3	Wrap Burst	0	Wrap
		1	No Wrap (default)
CR2-CR0	Burst Length	001	4 Words
		010	8 Words
		011	16 Words
		111	Continuous (default)

1. The combination X-Latency=2, Data held for two clock cycles and Wait active one data cycle before the WAIT state is not supported.

Table 12. Burst type definition

Mode	Start Add	4 Words	8 Words	16 Words	Continuous Burst
		Sequential	Sequential	Sequential	
Wrap	0	0-1-2-3	0-1-2-3-4-5-6-7	0-1-2-3-4-5-6-7-8-9-10-11-12-13-14-15	0-1-2-3-4-5-6...
	1	1-2-3-0	1-2-3-4-5-6-7-0	1-2-3-4-5-6-7-8-9-10-11-12-13-14-15-0	1-2-3-4-5-6-7-...15-WAIT-16-17-18...
	2	2-3-0-1	2-3-4-5-6-7-0-1	2-3-4-5-6-7-8-9-10-11-12-13-14-15-0-1	2-3-4-5-6-7...15-WAIT-WAIT-16-17-18...
	3	3-0-1-2	3-4-5-6-7-0-1-2	3-4-5-6-7-8-9-10-11-12-13-14-15-0-1-2	3-4-5-6-7...15-WAIT-WAIT-WAIT-16-17-18...
	...				
	7	7-4-5-6	7-0-1-2-3-4-5-6	7-8-9-10-11-12-13-14-15-0-1-2-3-4-5-6	7-8-9-10-11-12-13-14-15-WAIT-WAIT-WAIT-16-17...
	...				
	12				12-13-14-15-16-17-18...
	13				13-14-15-WAIT-16-17-18...
	14				14-15-WAIT-WAIT-16-17-18....
	15				15-WAIT-WAIT-WAIT-16-17-18...

Table 12. Burst type definition (continued)

Mode	Start Add	4 Words	8 Words	16 Words	Continuous Burst
		Sequential	Sequential	Sequential	
No-wrap	0	0-1-2-3	0-1-2-3-4-5-6-7	0-1-2-3-4-5-6-7-8-9-10-11-12-13-14-15	Same as for Wrap (Wrap /No Wrap has no effect on Continuous Burst)
	1	1-2-3-4	1-2-3-4-5-6-7-8	1-2-3-4-5-6-7-8-9-10-11-12-13-14-15-WAIT-16	
	2	2-3-4-5	2-3-4-5-6-7-8-9...	2-3-4-5-6-7-8-9-10-11-12-13-14-15-WAIT-WAIT-16-17	
	3	3-4-5-6	3-4-5-6-7-8-9-10	3-4-5-6-7-8-9-10-11-12-13-14-15-WAIT-WAIT-WAIT-16-17-18	
	...				
	7	7-8-9-10	7-8-9-10-11-12-13-14	7-8-9-10-11-12-13-14-15-WAIT-WAIT-WAIT-16-17-18-19-20-21-22	
	...				
	12	12-13-14-15	12-13-14-15-16-17-18-19	12-13-14-15-16-17-18-19-20-21-22-23-24-25-26-27	
	13	13-14-15-WAIT-16	13-14-15-WAIT-16-17-18-19-20	13-14-15-WAIT-16-17-18-19-20-21-22-23-24-25-26-27-28	
	14	14-15-WAIT-WAIT-16-17	14-15-WAIT-WAIT-16-17-18-19-20-21	14-15-WAIT-WAIT-16-17-18-19-20-21-22-23-24-25-26-27-28-29	
	15	15-WAIT-WAIT-WAIT-16-17-18	15-WAIT-WAIT-WAIT-16-17-18-19-20-21-22	15-WAIT-WAIT-WAIT-16-17-18-19-20-21-22-23-24-25-26-27-28-29-30	

Figure 5. X-Latency and data output configuration example

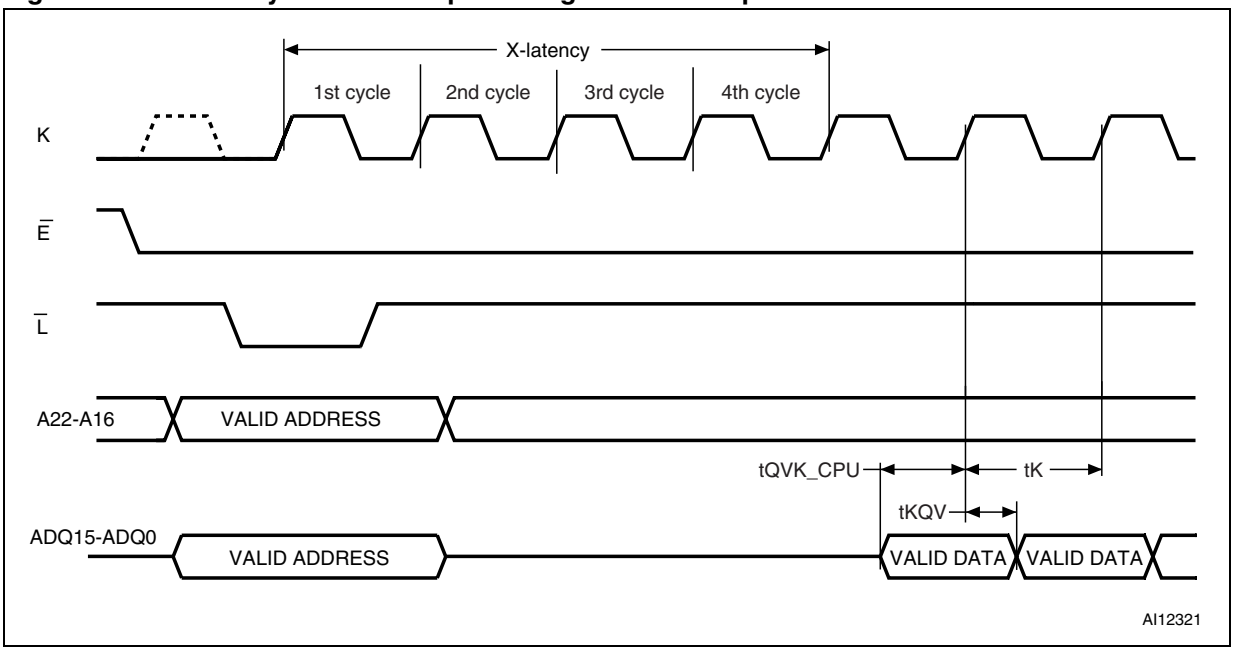

1. The settings shown are X-latency = 4, Data Output held for one clock cycle.

Figure 6. Wait configuration example

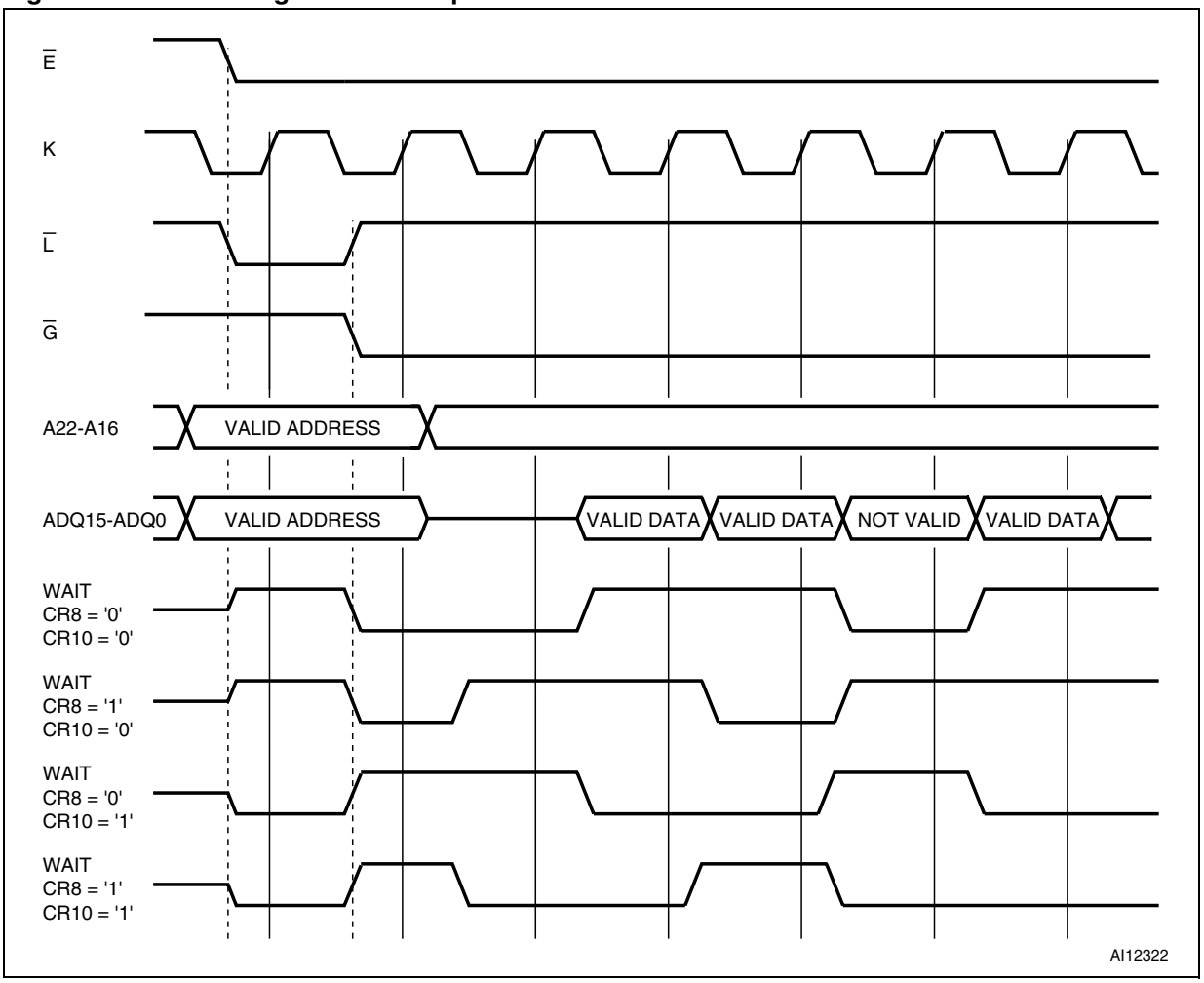

7 Read modes

Read operations can be performed in two different ways depending on the settings in the Configuration Register. If the clock signal is ‘don’t care’ for the data output, the read operation is asynchronous; if the data output is synchronized with clock, the read operation is synchronous.

The read mode and format of the data output are determined by the Configuration Register. (See Configuration Register section for details). All banks support both asynchronous and synchronous read operations.

7.1 Asynchronous Read mode

In Asynchronous Read operations the clock signal is ‘don’t care’. The device outputs the data corresponding to the address latched, that is the memory array, Status Register, Common Flash Interface or Electronic Signature depending on the command issued. CR15 in the Configuration Register must be set to ‘1’ for asynchronous operations.

The device features an Automatic Standby mode. During Asynchronous Read operations, after a bus inactivity of 150ns, the device automatically switches to the Automatic Standby mode. In this condition the power consumption is reduced to the standby value and the outputs are still driven.

In Asynchronous Read mode, the WAIT signal is always de-asserted.

See *Table 23: Asynchronous Read AC characteristics*, *Figure 9: asynchronous random access Read AC waveforms*, for details.

7.2 Synchronous Burst Read mode

In Synchronous Burst Read mode the data is output in bursts synchronized with the clock. It is possible to perform burst reads across bank boundaries.

Synchronous Burst Read mode can only be used to read the memory array. For other read operations, such as Read Status Register, Read CFI and Read Electronic Signature, Single Synchronous Read or Asynchronous Random Access Read must be used.

In Synchronous Burst Read mode the flow of the data output depends on parameters that are configured in the Configuration Register.

A burst sequence starts at the first clock edge (rising or falling depending on Valid Clock Edge bit CR6 in the Configuration Register) after the falling edge of Latch Enable or Chip Enable, whichever occurs last. Addresses are internally incremented and data is output on each data cycle after a delay which depends on the X latency bits CR13-CR11 of the Configuration Register.

The number of Words to be output during a Synchronous Burst Read operation can be configured as 4 Words, 8 Words, 16 Words or Continuous (Burst Length bits CR2-CR0). The data can be configured to remain valid for one or two clock cycles (Data Output Configuration bit CR9).

The order of the data output can be modified through the Wrap Burst bit in the Configuration Register. The burst sequence is sequential and can be confined inside the 4, 8 or 16 Word boundary (Wrap) or overcome the boundary (No Wrap).

The WAIT signal may be asserted to indicate to the system that an output delay will occur. This delay will depend on the starting address of the burst sequence and on the burst configuration.

WAIT is asserted during the X latency, the WAIT state and at the end of a 4, 8 and 16 Word burst. It is only deasserted when output data are valid or when $\overline{G}$ is at V_{IH}. In Continuous Burst Read mode a WAIT state will occur when crossing the first 16 Word boundary. If the starting address is aligned to the Burst Length (4, 8 or 16 Words) the wrapped configuration has no impact on the output sequence.

The WAIT signal can be configured to be active Low or active High by setting CR10 in the Configuration Register.

See *Table 24: Synchronous Read AC characteristics*, and *Figure 10: Synchronous Burst Read AC waveforms*, for details.

7.2.1 Synchronous Burst Read Suspend

A Synchronous Burst Read operation can be suspended, freeing the data bus for other higher priority devices. It can be suspended during the initial access latency time (before data is output) or after the device has output data. When the Synchronous Burst Read operation is suspended, internal array sensing continues and any previously latched internal data is retained. A burst sequence can be suspended and resumed as often as required as long as the operating conditions of the device are met.

A Synchronous Burst Read operation is suspended when Chip Enable, $\overline{E}$, is Low and the current address has been latched (on a Latch Enable rising edge or on a valid clock edge). The Clock signal is then halted at V_{IH} or at V_{IL}, and Output Enable, $\overline{G}$, goes High.

When Output Enable, $\overline{G}$, becomes Low again and the Clock signal restarts, the Synchronous Burst Read operation is resumed exactly where it stopped.

WAIT being gated by $\overline{E}$, it will remain active and will not revert to high impedance when $\overline{G}$ goes High. So if two or more devices are connected to the system's READY signal, to prevent bus contention the WAIT signal of the M58LR128HC/D should not be directly connected to the system's READY signal.

WAIT will revert to high-impedance when Chip Enable, $\overline{E}$, goes High.

See *Table 24: Synchronous Read AC characteristics*, and *Figure 12: Synchronous Burst Read Suspend AC waveforms*, for details.

7.3 Single Synchronous Read mode

Single Synchronous Read operations are similar to Synchronous Burst Read operations except that the memory outputs the same data to the end of the operation.

Synchronous Single Reads are used to read the Electronic Signature, Status Register, CFI, Block Protection Status, Configuration Register Status or Protection Register. When the addressed bank is in Read CFI, Read Status Register or Read Electronic Signature mode, the WAIT signal is deasserted when Output Enable, $\overline{G}$, is at V_{IH} or for the one clock cycle during which output data is valid. Otherwise, it is asserted.

See *Table 24: Synchronous Read AC characteristics*, and *Figure 10: Synchronous Burst Read AC waveforms*, for details.

8 Dual operations and Multiple Bank architecture

The Multiple Bank Architecture of the M58LR128HC/D gives greater flexibility for software developers to split the code and data spaces within the memory array. The Dual Operations feature simplifies the software management of the device by allowing code to be executed from one bank while another bank is being programmed or erased.

The Dual Operations feature means that while programming or erasing in one bank, read operations are possible in another bank with zero latency (only one bank at a time is allowed to be in program or erase mode).

If a read operation is required in a bank, which is programming or erasing, the program or erase operation can be suspended.

Also if the suspended operation was erase then a program command can be issued to another block, so the device can have one block in Erase Suspend mode, one programming and other banks in read mode.

Bus Read operations are allowed in another bank between setup and confirm cycles of program or erase operations.

By using a combination of these features, read operations are possible at any moment in the M58LR128HC/D device.

Dual operations between the Parameter Bank and either of the CFI, the OTP or the Electronic Signature memory space are not allowed. *Table 15* shows which dual operations are allowed or not between the CFI, the OTP, the Electronic Signature locations and the memory array.

Tables *13* and *14* show the dual operations possible in other banks and in the same bank.

Table 13. Dual operations allowed in other banks

Status of bank	Commands allowed in another bank							
	Read Array	Read Status Register	Read CFI Query	Read Electronic Signature	Program, Buffer Program	Block Erase	Program /Erase Suspend	Program /Erase Resume
Idle	Yes	Yes	Yes	Yes	Yes	Yes	Yes	Yes
Programming	Yes	Yes	Yes	Yes	–	–	Yes	–
Erasing	Yes	Yes	Yes	Yes	–	–	Yes	–
Program Suspended	Yes	Yes	Yes	Yes	–	–	–	Yes
Erase Suspended	Yes	Yes	Yes	Yes	Yes	–	–	Yes

Table 14. Dual operations allowed in same bank

Status of bank	Commands allowed in same bank							
	Read Array	Read Status Register	Read CFI Query	Read Electronic Signature	Program, Buffer Program	Block Erase	Program /Erase Suspend	Program /Erase Resume
Idle	Yes	Yes	Yes	Yes	Yes	Yes	Yes	Yes
Programming	–(1)	Yes	Yes	Yes	–	–	Yes	–
Erasing	–(1)	Yes	Yes	Yes	–	–	Yes	–
Program Suspended	Yes(2)	Yes	Yes	Yes	–	–	–	Yes
Erase Suspended	Yes(2)	Yes	Yes	Yes	Yes(1)	–	–	Yes

1. The Read Array command is accepted but the data output is not guaranteed until the Program or Erase has completed.
2. Not allowed in the Block that is being erased or in the Word that is being programmed.

Table 15. Dual operation limitations

Current Status		Commands allowed			
		Read CFI / OTP / Electronic Signature	Read Parameter Blocks	Read Main Blocks	
				Located in Parameter Bank	Not Located in Parameter Bank
Programming / Erasing Parameter Blocks		No	No	No	Yes
Programming / Erasing Main Blocks	Located in Parameter Bank	Yes	No	No	Yes
	Not Located in Parameter Bank	Yes	Yes	Yes	In Different Bank Only
Programming OTP		No	No	No	No

9 Block locking

The M58LR128HC/D features an instant, individual block locking scheme that allows any block to be locked or unlocked with no latency. This locking scheme has three levels of protection.

- Lock/Unlock - this first level allows software only control of block locking.
- Lock-Down - this second level requires hardware interaction before locking can be changed.
- $V_{PP} \leq V_{PPLK}$ - the third level offers a complete hardware protection against program and erase on all blocks.

The protection status of each block can be set to Locked, Unlocked, and Locked-Down. *Table 16*, defines all of the possible protection states ($\overline{WP}$, ADQ1, ADQ0), and *Appendix C*, *Figure 26*, shows a flowchart for the locking operations.

9.1 Reading a Block's lock status

The lock status of every block can be read in the Read Electronic Signature mode of the device. To enter this mode issue the Read Electronic Signature command. Subsequent reads at the address specified in *Table 7*, will output the protection status of that block.

The lock status is represented by ADQ0 and ADQ1. ADQ0 indicates the Block Lock/Unlock status and is set by the Lock command and cleared by the Unlock command. ADQ0 is automatically set when entering Lock-Down. ADQ1 indicates the Lock-Down status and is set by the Lock-Down command. ADQ1 cannot be cleared by software, only by a hardware reset or power-down.

The following sections explain the operation of the locking system.

9.2 Locked state

The default status of all blocks on power-up or after a hardware reset is Locked (states (0,0,1) or (1,0,1)). Locked blocks are fully protected from program or erase operations. Any program or erase operations attempted on a locked block will return an error in the Status Register. The Status of a Locked block can be changed to Unlocked or Locked-Down using the appropriate software commands. An Unlocked block can be Locked by issuing the Lock command.

9.3 Unlocked state

Unlocked blocks (states (0,0,0), (1,0,0) (1,1,0)), can be programmed or erased. All unlocked blocks return to the Locked state after a hardware reset or when the device is powered-down. The status of an unlocked block can be changed to Locked or Locked-Down using the appropriate software commands. A locked block can be unlocked by issuing the Unlock command.

9.4 Lock-Down state

Blocks that are Locked-Down (state (0,1,x))are protected from program and erase operations (as for Locked blocks) but their protection status cannot be changed using software commands alone. A Locked or Unlocked block can be Locked-Down by issuing the Lock-Down command. Locked-Down blocks revert to the Locked state when the device is reset or powered-down.

The Lock-Down function is dependent on the Write Protect, $\overline{WP}$, input pin.

When $\overline{WP}$=0 (V_{IL}), the blocks in the Lock-Down state (0,1,x) are protected from program, erase and protection status changes.

When $\overline{WP}$=1 (V_{IH}) the Lock-Down function is disabled (1,1,x) and Locked-Down blocks can be individually unlocked to the (1,1,0) state by issuing the software command, where they can be erased and programmed.

When the Lock-Down function is disabled ($\overline{WP}$=1) blocks can be locked (1,1,1) and unlocked (1,1,0) as desired. When $\overline{WP}$=0 blocks that were previously Locked-Down return to the Lock-Down state (0,1,x) regardless of any changes that were made while $\overline{WP}$=1.

Device reset or power-down resets all blocks, including those in Lock-Down, to the Locked state.

9.5 Locking operations during Erase Suspend

Changes to block lock status can be performed during an erase suspend by using the standard locking command sequences to unlock, lock or lock-down a block. This is useful in the case when another block needs to be updated while an erase operation is in progress.

To change block locking during an erase operation, first write the Erase Suspend command, then check the Status Register until it indicates that the erase operation has been suspended. Next write the desired Lock command sequence to a block and the lock status will be changed. After completing any desired lock, read, or program operations, resume the erase operation with the Erase Resume command.

If a block is locked or locked-down during an erase suspend of the same block, the locking status bits will be changed immediately, but when the erase is resumed, the erase operation will complete. Locking operations cannot be performed during a program suspend.

Table 16. Lock status

Current Protection Status[1] ($\overline{WP}$, ADQ1, ADQ0)		Next Protection Status[1] ($\overline{WP}$, ADQ1, ADQ0)			
Current State	**Program/Erase Allowed**	**After Block Lock Command**	**After Block Unlock Command**	**After Block Lock-Down Command**	**After $\overline{WP}$ transition**
1,0,0	yes	1,0,1	1,0,0	1,1,1	0,0,0
1,0,1[2]	no	1,0,1	1,0,0	1,1,1	0,0,1
1,1,0	yes	1,1,1	1,1,0	1,1,1	0,1,1
1,1,1	no	1,1,1	1,1,0	1,1,1	0,1,1
0,0,0	yes	0,0,1	0,0,0	0,1,1	1,0,0
0,0,1[2]	no	0,0,1	0,0,0	0,1,1	1,0,1
0,1,1	no	0,1,1	0,1,1	0,1,1	1,1,1 or 1,1,0[3]

1. The lock status is defined by the write protect pin and by ADQ1 ('1' for a locked-down block) and ADQ0 ('1' for a locked block) as read in the Read Electronic Signature command with ADQ1 = V_{IH} and ADQ0 = V_{IL}.
2. All blocks are locked at power-up, so the default configuration is 001 or 101 according to $\overline{WP}$ status.
3. A $\overline{WP}$ transition to V_{IH} on a locked block will restore the previous ADQ0 value, giving a 111 or 110.

10 Program and erase times and endurance cycles

The Program and Erase times and the number of Program/ Erase cycles per block are shown in *Table 17*. Exact erase times may change depending on the memory array condition. The best case is when all the bits in the block are at '0' (pre-programmed). The worst case is when all the bits in the block are at '1' (not preprogrammed). Usually, the system overhead is negligible with respect to the erase time. In the M58LR128HC/D the maximum number of Program/Erase cycles depends on the V_{PP} voltage supply used.

Table 17. Program/Erase times and endurance cycles(1) (2)

Parameter		Condition		Min	Typ	Typical after 100kW/E Cycles	Max	Unit
$V_{PP} = V_{DD}$	Erase	Parameter Block (16 KWord)			0.4	1	2.5	s
		Main Block (64 KWord)	Preprogrammed		1.2	3	4	s
			Not Preprogrammed		1.5		4	s
	Program(3)	Single Word	Word Program		12		180	µs
			Buffer Program		12		180	µs
		Buffer (32 Words) (Buffer Program)			384			µs
		Main Block (64 KWord)			768			ms
	Suspend Latency	Program			5		10	µs
		Erase			5		20	µs
	Program/Erase Cycles (per Block)	Main Blocks		100,000				cycles
		Parameter Blocks		100,000				cycles

Table 17. Program/Erase times and endurance cycles(1) (2) (continued)

Parameter		Condition		Min	Typ	Typical after 100kW/E Cycles	Max	Unit
$V_{PP} = V_{PPH}$	Erase	Parameter Block (16 KWord)			0.4		2.5	s
		Main Block (64 KWord)			1		4	s
	Program(3)	Single Word	Word Program		10		170	µs
			Buffer Enhanced Factory Program(4)		2.5			µs
		Buffer (32 Words)	Buffer Program		80			µs
			Buffer Enhanced Factory Program		80			µs
		Main Block (64 KWords)	Buffer Program		160			ms
			Buffer Enhanced Factory Program		160			ms
		Bank (8 Mbits)	Buffer Program		1.28			s
			Buffer Enhanced Factory Program		1.28			s
	Program/Erase Cycles (per Block)	Main Blocks					1000	cycles
		Parameter Blocks					2500	cycles
	Blank Check	Main Blocks			16			ms
		Parameter Blocks			4			ms

1. $T_A = -25$ to 85°C; $V_{DD} = 1.7V$ to 2V; $V_{DDQ} = 1.7V$ to 2V.
2. Values are liable to change with the external system-level overhead (command sequence and Status Register polling execution).
3. Excludes the time needed to execute the command sequence.
4. This is an average value on the entire device.

11 Maximum rating

Stressing the device above the rating listed in the Absolute Maximum Ratings table may cause permanent damage to the device. These are stress ratings only and operation of the device at these or any other conditions above those indicated in the Operating sections of this specification is not implied. Exposure to Absolute Maximum Rating conditions for extended periods may affect device reliability. Refer also to the Numonyx SURE Program and other relevant quality documents.

Table 18. Absolute maximum ratings

Symbol	Parameter	Value		Unit
		Min	Max	
T_A	Ambient Operating Temperature	–25	85	°C
T_{BIAS}	Temperature Under Bias	–25	85	°C
T_{STG}	Storage Temperature	–65	125	°C
V_{IO}	Input or Output Voltage	–0.5	3.8	V
V_{DD}	Supply Voltage	–0.2	2.5	V
V_{DDQ}	Input/Output Supply Voltage	–0.2	2.5	V
V_{PP}	Program Voltage	–0.2	10	V
I_O	Output Short Circuit Current		100	mA
t_{VPPH}	Time for V_{PP} at V_{PPH}		100	hours

12 DC and AC parameters

This section summarizes the operating measurement conditions, and the DC and AC characteristics of the device. The parameters in the DC and AC characteristics Tables that follow, are derived from tests performed under the Measurement Conditions summarized in *Table 19: Operating and AC measurement conditions*. Designers should check that the operating conditions in their circuit match the operating conditions when relying on the quoted parameters.

Table 19. Operating and AC measurement conditions

Parameter	M58LR128HC/D		Units
	70		
	Min	Max	
V_{DD} supply voltage	1.7	2.0	V
V_{DDQ} supply voltage	1.7	2.0	V
V_{PP} supply voltage (factory environment)	8.5	9.5	V
V_{PP} supply voltage (application environment)	–0.4	V_{DDQ}+0.4	V
Ambient operating temperature	–25	85	°C
Load capacitance (C_L)	30		pF
Input rise and fall times		5	ns
Input pulse voltages	0 to V_{DDQ}		V
Input and output timing ref. voltages	$V_{DDQ}/2$		V

Figure 7. AC measurement I/O waveform

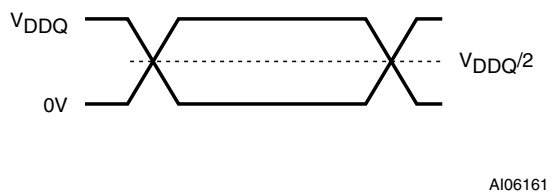

Figure 8. AC measurement load circuit

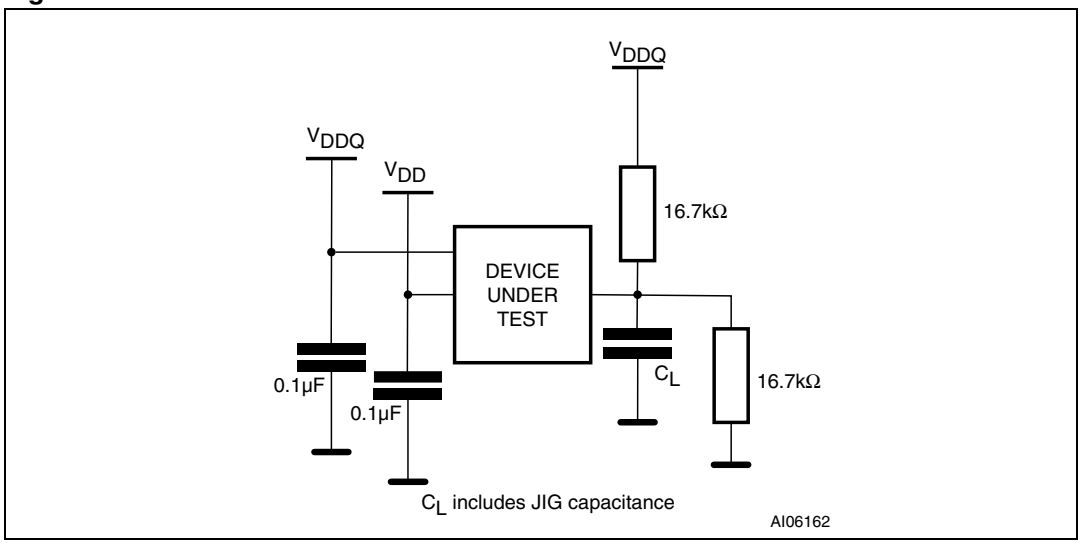

Table 20. Capacitance(1)

Symbol	Parameter	Test Condition	Min	Max	Unit
C_{IN}	Input Capacitance	V_{IN} = 0V	6	8	pF
C_{OUT}	Output Capacitance	V_{OUT} = 0V	8	12	pF

1. Sampled only, not 100% tested.

Table 21. DC characteristics - currents

Symbol	Parameter	Test Condition	Typ	Max	Unit
I_{LI}	Input Leakage Current	$0V \le V_{IN} \le V_{DDQ}$		±1	µA
I_{LO}	Output Leakage Current	$0V \le V_{OUT} \le V_{DDQ}$		±1	µA
I_{DD1}	Supply Current Asynchronous Read (f=5MHz)	$\overline{E} = V_{IL}$, $\overline{G} = V_{IH}$	13	15	mA
	Supply Current Synchronous Read (f=66MHz)	4 Word	18	20	mA
		8 Word	20	22	mA
		16 Word	25	27	mA
		Continuous	28	30	mA
I_{DD2}	Supply Current (Reset)	$\overline{RP} = V_{SS} \pm 0.2V$	22	50	µA
I_{DD3}	Supply Current (Standby)	$\overline{E} = V_{DD} \pm 0.2V$ K=V_{SS}	22	50	µA
I_{DD4}	Supply Current (Automatic Standby)	$\overline{E} = V_{IL}$, $\overline{G} = V_{IH}$	22	50	µA
I_{DD5}(1)	Supply Current (Program)	$V_{PP} = V_{PPH}$	8	20	mA
		$V_{PP} = V_{DD}$	10	25	mA
	Supply Current (Erase)	$V_{PP} = V_{PPH}$	8	20	mA
		$V_{PP} = V_{DD}$	10	25	mA
I_{DD6}(1),(2)	Supply Current (Dual Operations)	Program/Erase in one Bank, Asynchronous Read in another Bank	23	40	mA
		Program/Erase in one Bank, Synchronous Read (Continuous f=66MHz) in another Bank	38	55	mA
I_{DD7}(1)	Supply Current Program/ Erase Suspended (Standby)	$\overline{E} = V_{DD} \pm 0.2V$ K=V_{SS}	22	50	µA
I_{PP1}(1)	V_{PP} Supply Current (Program)	$V_{PP} = V_{PPH}$	2	5	mA
		$V_{PP} = V_{DD}$	0.2	5	µA
	V_{PP} Supply Current (Erase)	$V_{PP} = V_{PPH}$	2	5	mA
		$V_{PP} = V_{DD}$	0.2	5	µA
I_{PP2}	V_{PP} Supply Current (Read)	$V_{PP} \le V_{DD}$	0.2	5	µA
I_{PP3}(1)	V_{PP} Supply Current (Standby)	$V_{PP} \le V_{DD}$	0.2	5	µA

1. Sampled only, not 100% tested.
2. V_{DD} Dual Operation current is the sum of read and program or erase currents.

Table 22. DC characteristics - voltages

Symbol	Parameter	Test Condition	Min	Typ	Max	Unit
V_{IL}	Input Low Voltage		0		0.4	V
V_{IH}	Input High Voltage		V_{DDQ} –0.4		V_{DDQ} + 0.4	V
V_{OL}	Output Low Voltage	I_{OL} = 100µA			0.1	V
V_{OH}	Output High Voltage	I_{OH} = –100µA	V_{DDQ} –0.1			V
V_{PP1}	V_{PP} Program Voltage-Logic	Program, Erase	1.3	1.8	3.3	V
V_{PPH}	V_{PP} Program Voltage Factory	Program, Erase	8.5	9.0	9.5	V
V_{PPLK}	Program or Erase Lockout				0.4	V
V_{LKO}	V_{DD} Lock Voltage				1	V
V_{RPH}	$\overline{RP}$ pin Extended High Voltage				3.3	V

Figure 9. asynchronous random access Read AC waveforms

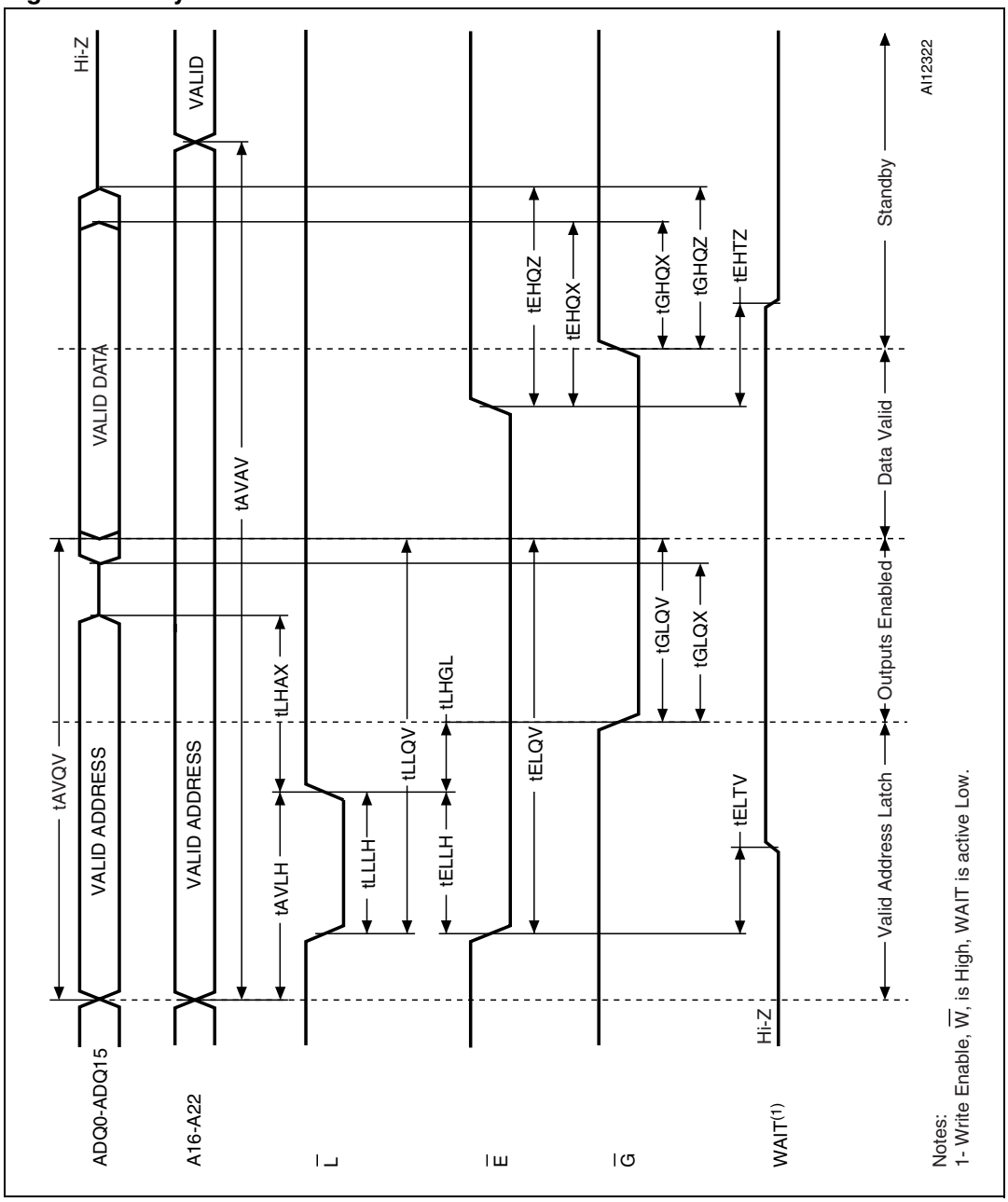

Notes:
1- Write Enable, $\overline{W}$, is High, WAIT is active Low.

Table 23. Asynchronous Read AC characteristics

Symbol		Alt	Parameter		M58LR128HC/D	Unit
					70	
Read Timings	t_{AVAV}	t_{RC}	Address Valid to Next Address Valid	Min	70	ns
	t_{AVQV}	t_{ACC}	Address Valid to Output Valid (Random)	Max	70	ns
	t_{ELTV}		Chip Enable Low to Wait Valid	Max	11	ns
	t_{ELQV}(2)	t_{CE}	Chip Enable Low to Output Valid	Max	70	ns
	t_{EHTZ}		Chip Enable High to Wait Hi-Z	Max	14	ns
	t_{EHQX}(1)	t_{OH}	Chip Enable High to Output Transition	Min	0	ns
	t_{EHQZ}(1)	t_{HZ}	Chip Enable High to Output Hi-Z	Max	14	ns
	t_{GLQV}(2)	t_{OE}	Output Enable Low to Output Valid	Max	20	ns
	t_{GLQX}(1)	t_{OLZ}	Output Enable Low to Output Transition	Min	0	ns
	t_{GHQX}(1)	t_{OH}	Output Enable High to Output Transition	Min	0	ns
	t_{GHQZ}(1)	t_{DF}	Output Enable High to Output Hi-Z	Max	14	ns
Latch Timings	t_{AVLH}	t_{AVADVH}	Address Valid to Latch Enable High	Min	7	ns
	t_{ELLH}	t_{ELADVH}	Chip Enable Low to Latch Enable High	Min	10	ns
	t_{LHAX}	t_{ADVHAX}	Latch Enable High to Address Transition	Min	7	ns
	t_{LLLH}	$t_{ADVLADVH}$	Latch Enable Pulse Width	Min	7	ns
	t_{LLQV}	t_{ADVLQV}	Latch Enable Low to Output Valid (Random)	Max	70	ns
	t_{LHGL}	t_{ADVHGL}	Latch Enable High to Output Enable Low	Min	5	ns

1. Sampled only, not 100% tested.
2. $\overline{G}$ may be delayed by up to t_{ELQV} - t_{GLQV} after the falling edge of $\overline{E}$ without increasing t_{ELQV}.

Figure 10. Synchronous Burst Read AC waveforms

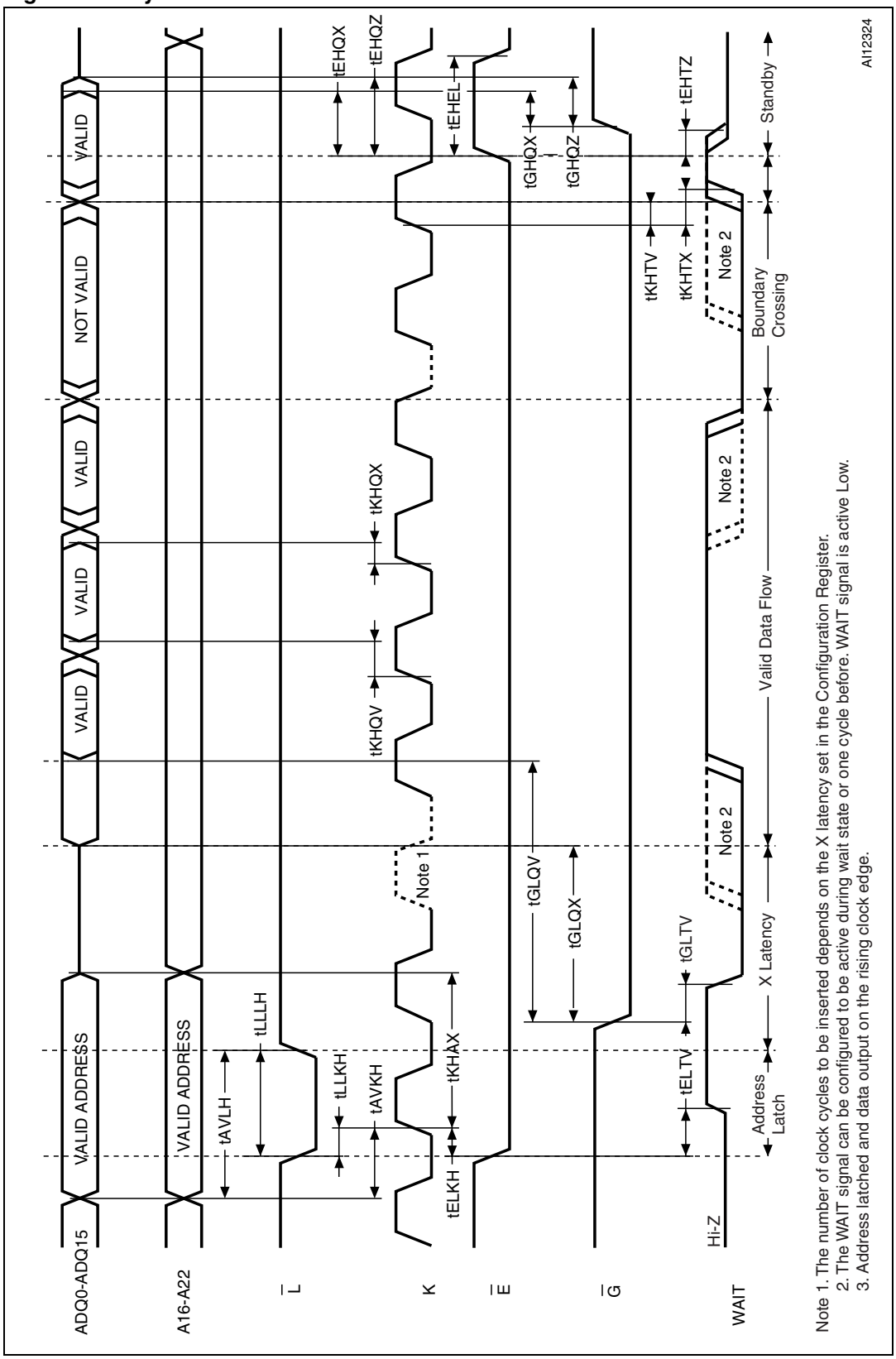

Note 1. The number of clock cycles to be inserted depends on the X latency set in the Configuration Register.
2. The WAIT signal can be configured to be active during wait state or one cycle before. WAIT signal is active Low.
3. Address latched and data output on the rising clock edge.

Figure 11. Single Synchronous Read AC waveforms

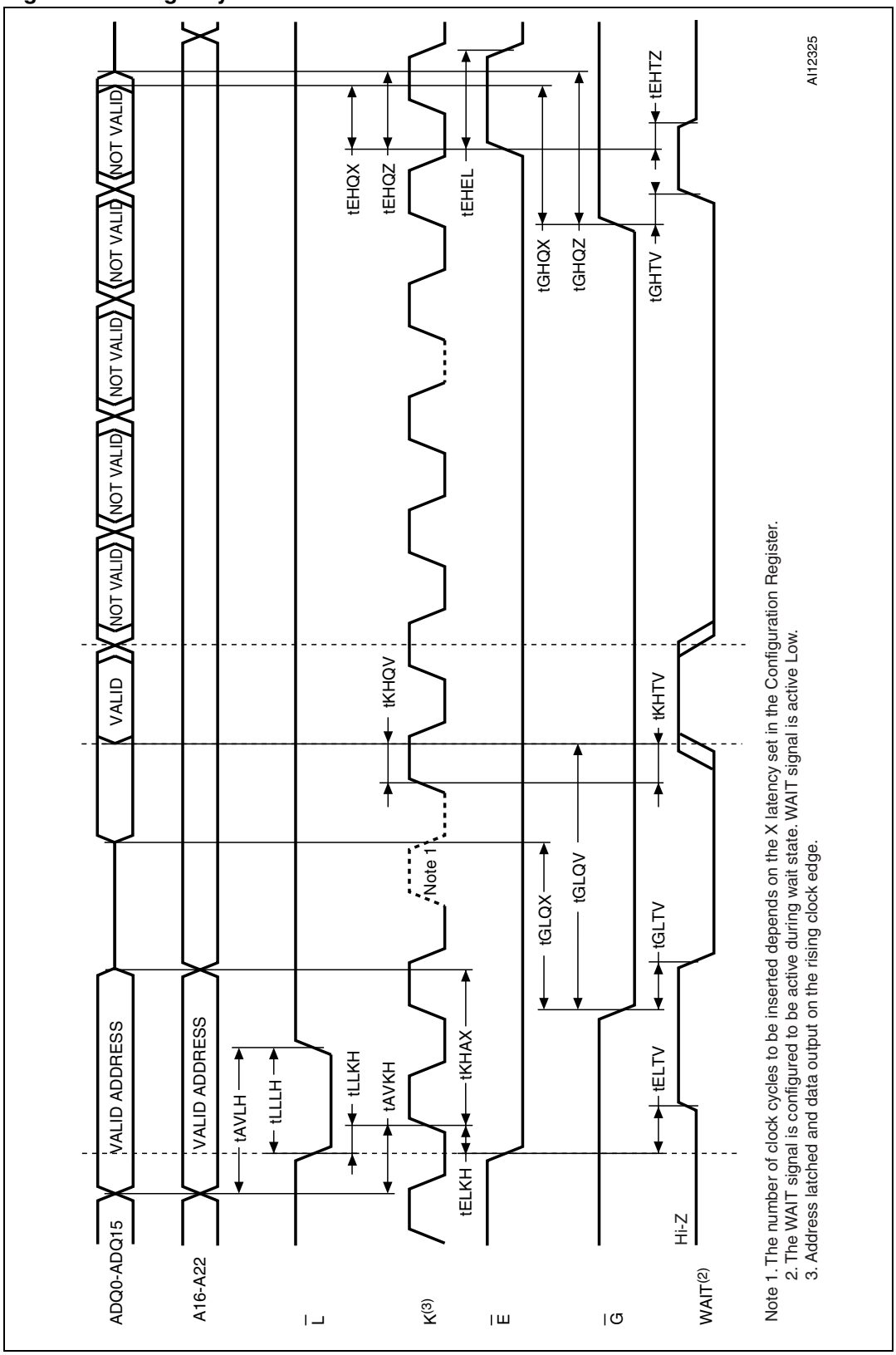

Figure 12. Synchronous Burst Read Suspend AC waveforms

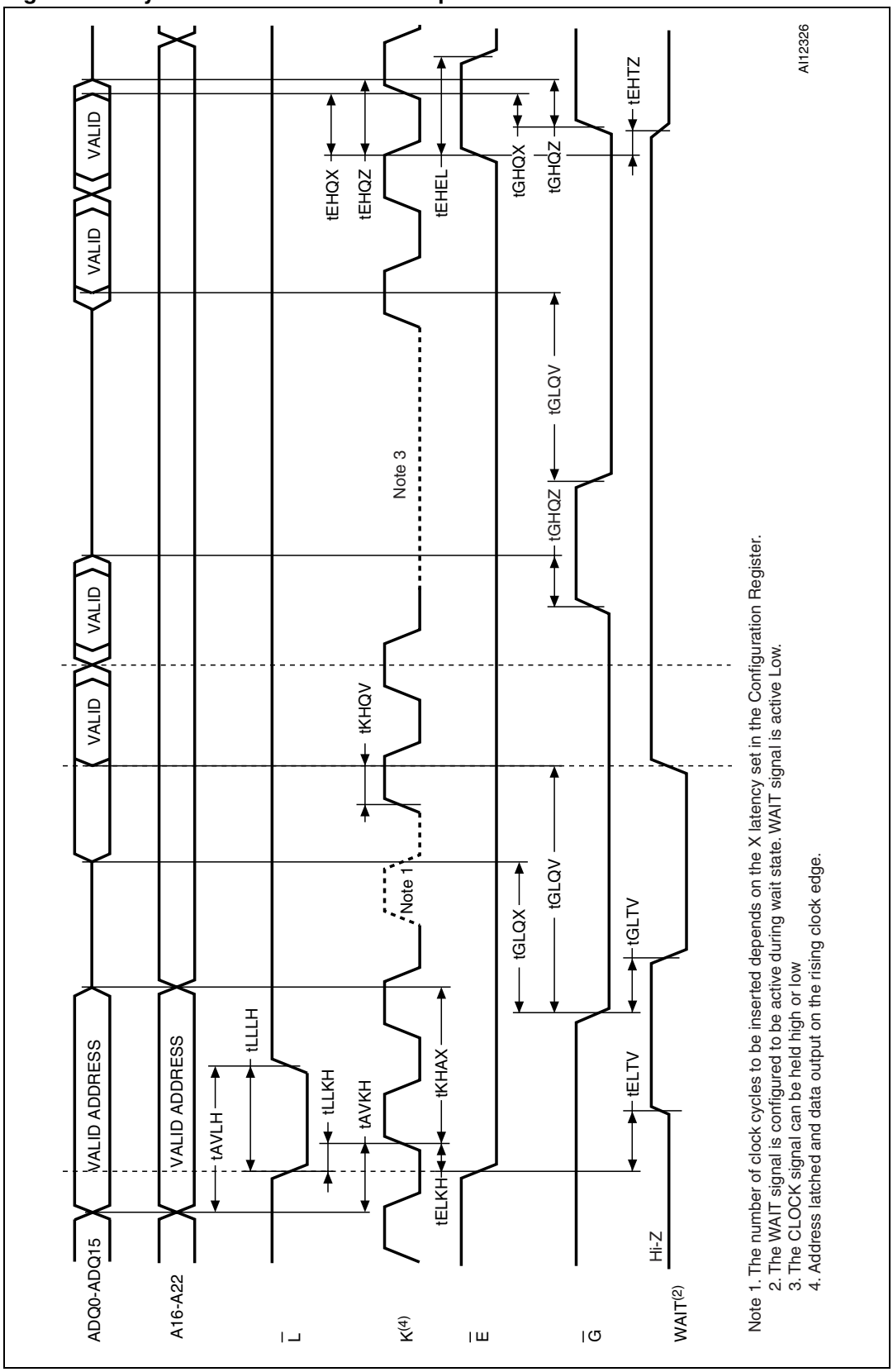

Figure 13. Clock input AC waveform

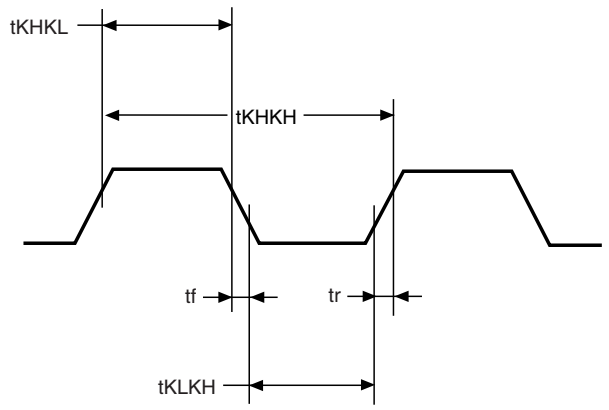

Table 24. Synchronous Read AC characteristics(1) (2)

Symbol		Alt	Parameter		M58LR128HC/D 70	Unit
Synchronous Read Timings	t_{AVKH}	t_{AVCLKH}	Address Valid to Clock High	Min	5	ns
	t_{ELKH}	t_{ELCLKH}	Chip Enable Low to Clock High	Min	5	ns
	t_{ELTV}		Chip Enable Low to Wait Valid	Max	11	ns
	t_{EHEL}		Chip Enable Pulse Width (subsequent synchronous reads)	Min	14	ns
	t_{EHTZ}		Chip Enable High to Wait Hi-Z	Max	14	ns
	t_{GHTV}		Output Enable High to Wait Valid	Min	11	ns
	t_{GLTV}		Output Enable Low to Wait Valid	Max	11	ns
	t_{KHAX}	t_{CLKHAX}	Clock High to Address Transition	Min	7	ns
	t_{KHQV} t_{KHTV}	t_{CLKHQV}	Clock High to Output Valid Clock High to WAIT Valid	Max	11	ns
	t_{KHQX} t_{KHTX}	t_{CLKHQX}	Clock High to Output Transition Clock High to WAIT Transition	Min	3	ns
	t_{LLKH}	$t_{ADVLCLKH}$	Latch Enable Low to Clock High	Min	5	ns
Clock Specifications	t_{KHKH}(3)	t_{CLK}	Clock Period (66MHz)	Min	15	ns
	t_{KHKL} t_{KLKH}		Clock High to Clock Low Clock Low to Clock High	Min	3.5	ns
	t_f t_r		Clock Fall or Rise Time	Max	3	ns

1. Sampled only, not 100% tested.
2. For other timings please refer to *Table 23: Asynchronous Read AC characteristics*.
3. The device can support jitters of +/-5% on clock frequency.

Figure 14. Write AC waveforms, Write Enable controlled

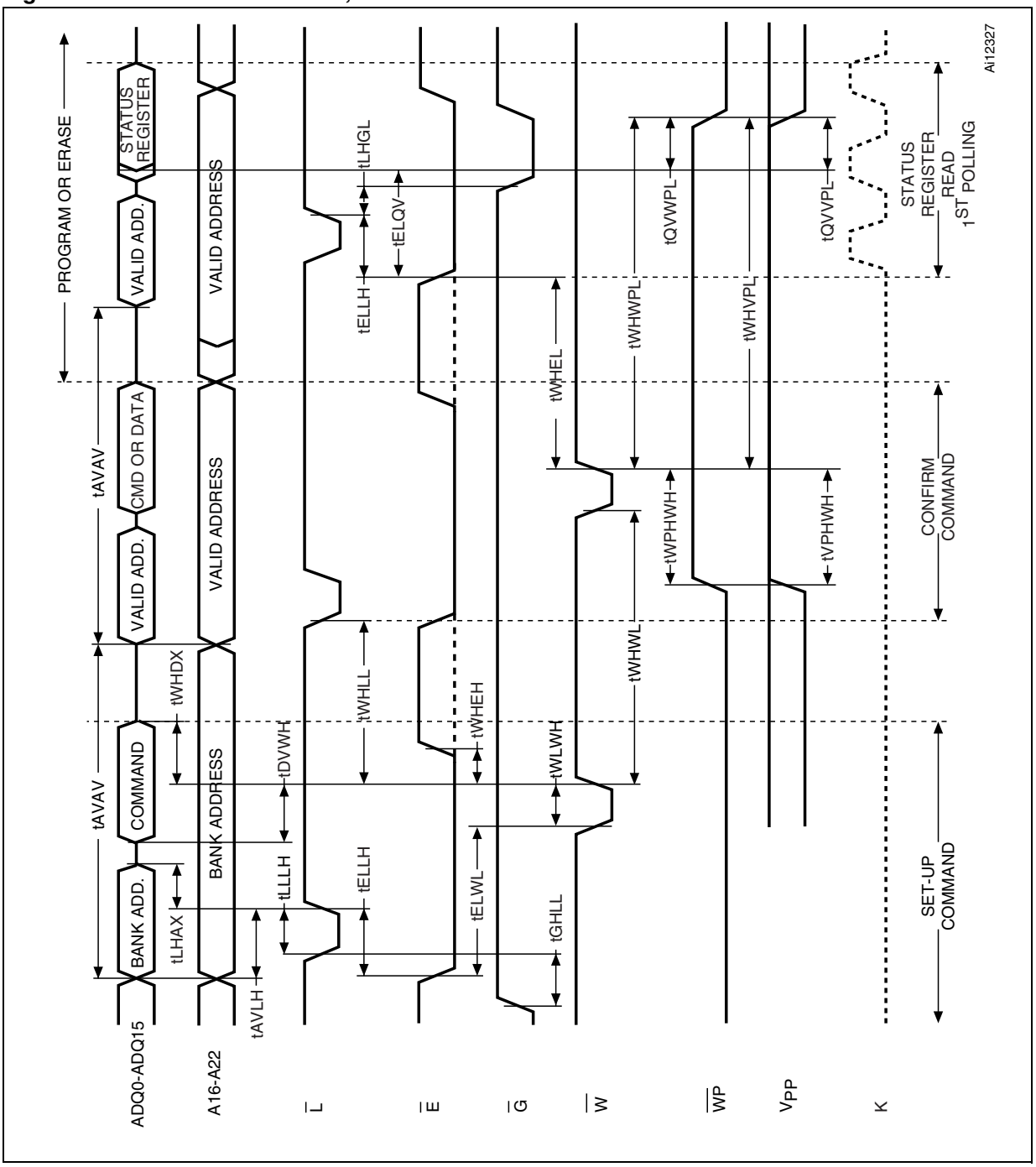

Table 25. Write AC characteristics, Write Enable controlled(1)

Symbol		Alt	Parameter		M58LR128HC/D 70	Unit
Write Enable Controlled Timings	t_{AVAV}	t_{WC}	Address Valid to Next Address Valid	Min	70	ns
	t_{AVLH}		Address Valid to Latch Enable High	Min	7	ns
	t_{DVWH}	t_{DS}	Data Valid to Write Enable High	Min	40	ns
	t_{ELLH}		Chip Enable Low to Latch Enable High	Min	10	ns
	t_{ELWL}	t_{CS}	Chip Enable Low to Write Enable Low	Min	0	ns
	t_{ELQV}		Chip Enable Low to Output Valid	Min	70	ns
	t_{GHLL}		Output Enable High to Latch Enable Low	Min	20	ns
	t_{LHAX}		Latch Enable High to Address Transition	Min	7	ns
	t_{LHGL}		Latch Enable High to Output Enable Low	Min	5	ns
	t_{LLLH}		Latch Enable Pulse Width	Min	7	ns
	t_{WHDX}	t_{DH}	Write Enable High to Input Transition	Min	0	ns
	t_{WHEH}	t_{CH}	Write Enable High to Chip Enable High	Min	0	ns
	t_{WHEL}(2)		Write Enable High to Chip Enable Low	Min	25	ns
	t_{WHLL}		Write Enable High to Latch Enable Low	Min	0	ns
	t_{WHWL}	t_{WPH}	Write Enable High to Write Enable Low	Min	25	ns
	t_{WLWH}	t_{WP}	Write Enable Low to Write Enable High	Min	45	ns
Protection Timings	t_{QVVPL}		Output (Status Register) Valid to V_{PP} Low	Min	0	ns
	t_{QVWPL}		Output (Status Register) Valid to Write Protect Low	Min	0	ns
	t_{VPHWH}	t_{VPS}	V_{PP} High to Write Enable High	Min	200	ns
	t_{WHVPL}		Write Enable High to V_{PP} Low	Min	200	ns
	t_{WHWPL}		Write Enable High to Write Protect Low	Min	200	ns
	t_{WPHWH}		Write Protect High to Write Enable High	Min	200	ns

1. Sampled only, not 100% tested.
2. t_{WHEL} has the values shown when reading in the targeted bank or when reading following a Set Configuration Register command.System designers should take this into account and may insert a software No-Op instruction to delay the first read in the same bank after issuing any command and to delay the first read to any address after issuing a Set Configuration Register command. If the first read after the command is a Read Array operation in a different bank and no changes to the Configuration Register have been issued, t_{WHEL} is 0ns.

Figure 15. Write AC waveforms, Chip Enable controlled

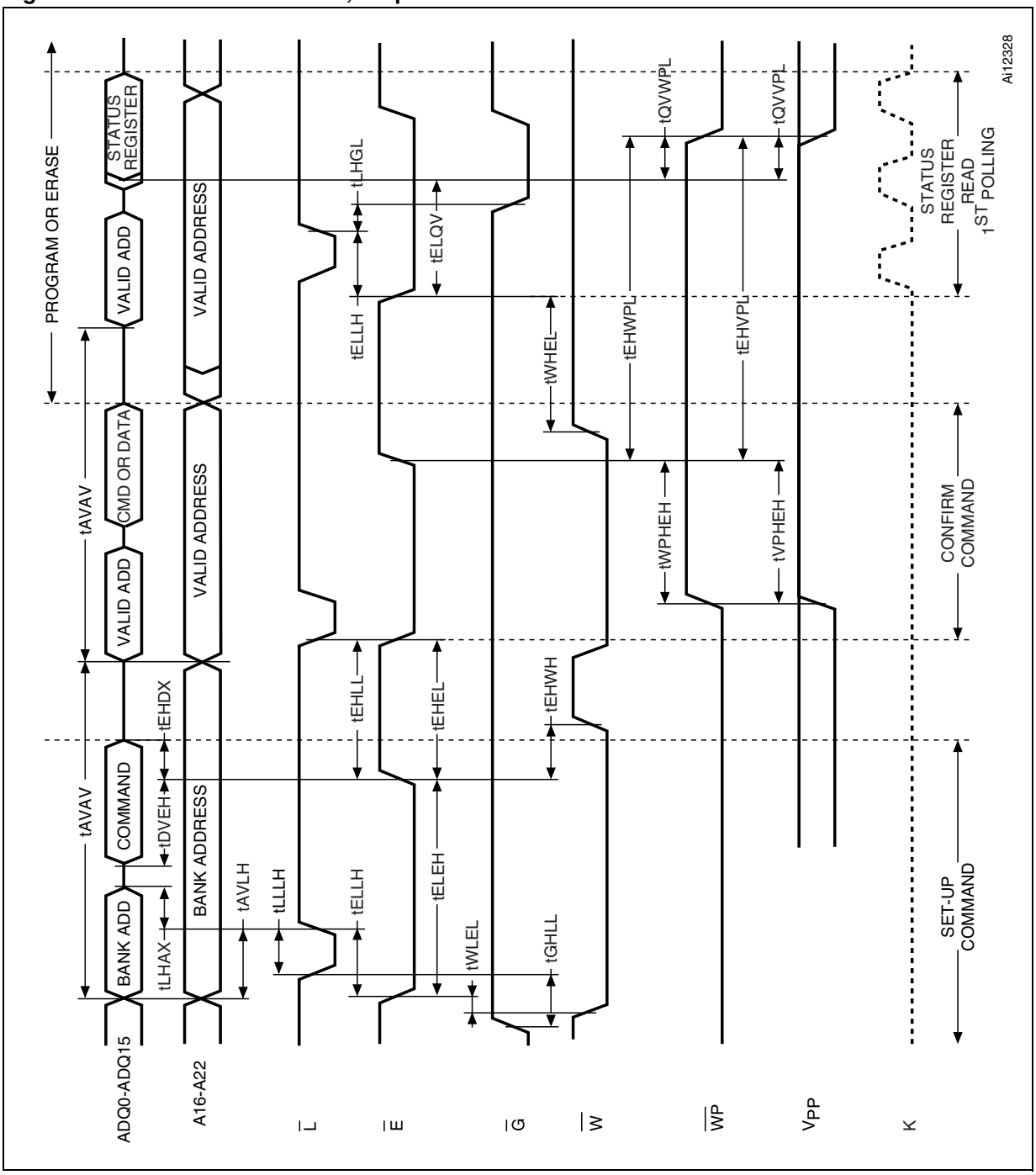

Table 26. Write AC characteristics, Chip Enable controlled[1]

Symbol		Alt	Parameter		M58LR128HC/D 70	Unit
Chip Enable Controlled Timings	t_{AVAV}	t_{WC}	Address Valid to Next Address Valid	Min	70	ns
	t_{AVLH}		Address Valid to Latch Enable High	Min	7	ns
	t_{DVEH}	t_{DS}	Data Valid to Chip Enable High	Min	40	ns
	t_{EHDX}	t_{DH}	Chip Enable High to Input Transition	Min	0	ns
	t_{EHEL}	t_{WPH}	Chip Enable High to Chip Enable Low	Min	25	ns
	t_{EHLL}		Chip Enable High to Latch Enable Low	Min	0	ns
	t_{EHWH}	t_{CH}	Chip Enable High to Write Enable High	Min	0	ns
	t_{ELEH}	t_{WP}	Chip Enable Low to Chip Enable High	Min	45	ns
	t_{ELLH}		Chip Enable Low to Latch Enable High	Min	10	ns
	t_{ELQV}		Chip Enable Low to Output Valid	Min	70	ns
	t_{GHLL}		Output Enable High to Latch Enable Low	Min	20	ns
	t_{LHAX}		Latch Enable High to Address Transition	Min	20	ns
	t_{LHGL}		Latch Enable High to Output Enable Low	Min	5	ns
	t_{LLLH}		Latch Enable Pulse Width	Min	7	ns
	t_{WHEL}[2]		Write Enable High to Chip Enable Low	Min	25	ns
	t_{WLEL}	t_{CS}	Write Enable Low to Chip Enable Low	Min	0	ns
Protection Timings	t_{EHVPL}		Chip Enable High to V_{PP} Low	Min	200	ns
	t_{EHWPL}		Chip Enable High to Write Protect Low	Min	200	ns
	t_{QVVPL}		Output (Status Register) Valid to V_{PP} Low	Min	0	ns
	t_{QVWPL}		Output (Status Register) Valid to Write Protect Low	Min	0	ns
	t_{VPHEH}	t_{VPS}	V_{PP} High to Chip Enable High	Min	200	ns
	t_{WPHEH}		Write Protect High to Chip Enable High	Min	200	ns

1. Sampled only, not 100% tested.
2. t_{WHEL} has the values shown when reading in the targeted bank or when reading following a Set Configuration Register command.System designers should take this into account and may insert a software No-Op instruction to delay the first read in the same bank after issuing any command and to delay the first read to any address after issuing a Set Configuration Register command. If the first read after the command is a Read Array operation in a different bank and no changes to the Configuration Register have been issued, t_{WHEL} is 0ns.

Figure 16. Reset and Power-up AC waveforms

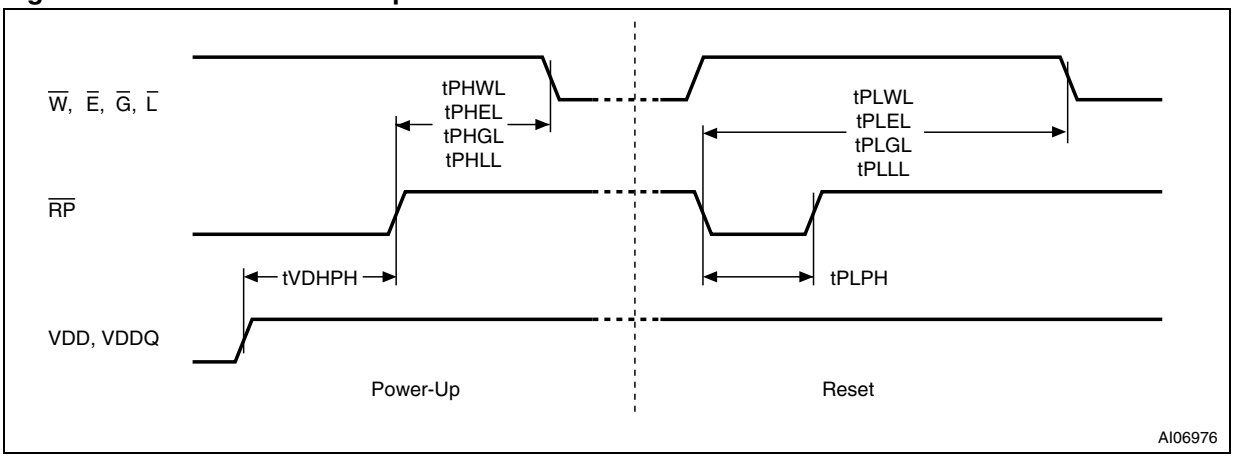

Table 27. Reset and Power-up AC characteristics

Symbol	Parameter	Test Condition		M58LR128HC/D 70	Unit
t_{PLWL} t_{PLEL} t_{PLGL} t_{PLLL}	Reset Low to Write Enable Low, Chip Enable Low, Output Enable Low, Latch Enable Low	During Program	Min	10	µs
		During Erase	Min	20	µs
		Other Conditions	Min	70	ns
t_{PHWL} t_{PHEL} t_{PHGL} t_{PHLL}	Reset High to Write Enable Low Chip Enable Low Output Enable Low Latch Enable Low		Min	30	ns
t_{PLPH}(1),(2)	$\overline{RP}$ Pulse Width		Min	50	ns
t_{VDHPH}(3)	Supply Voltages High to Reset High		Min	150	µs

1. The device Reset is possible but not guaranteed if t_{PLPH} < 50ns.
2. Sampled only, not 100% tested.
3. It is important to assert $\overline{RP}$ in order to allow proper CPU initialization during Power-Up or Reset.

13 Package mechanical

In order to meet environmental requirements, Numonyx offers these devices in ECOPACK® packages. These packages have a Lead-free second-level interconnect. The category of Second-Level Interconnect is marked on the package and on the inner box label, in compliance with JEDEC Standard JESD97.

The maximum ratings related to soldering conditions are also marked on the inner box label.

Figure 17. VFBGA44 7.7x9mm - 10x4 ball array, 0.50mm pitch, Bottom View Package Outline

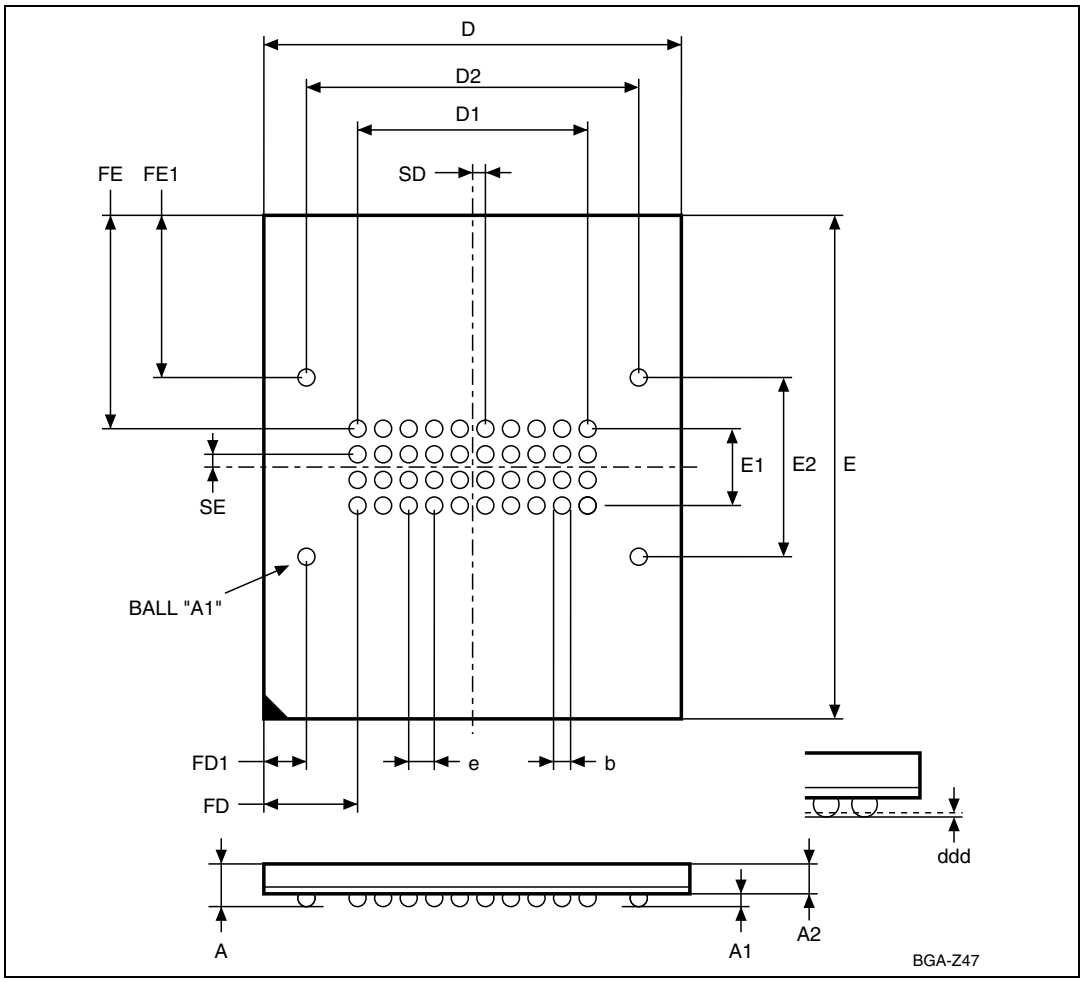

1. Drawing is not to scale.

Table 28. VFBGA44 7.7x9mm - 10x4 ball array, 0.50mm pitch, package mechanical data

Symbol	millimeters			inches		
	Typ	Min	Max	Typ	Min	Max
A			1.00			0.039
A1		0.15			0.006	
A2	0.66			0.026		
b	0.32	0.27	0.37	0.013	0.011	0.015
D	7.70	7.60	7.80	0.303	0.299	0.307
D1	4.50			0.177		
D2	6.50			0.256		
ddd			0.08			0.003
E	9.00	8.90	9.10	0.354	0.350	0.358
E1	1.50			0.059		
E2	3.50			0.138		
e	0.50	–	–	0.020	–	–
FD	1.60			0.063		
FD1	0.60			0.024		
FE	3.75			0.148		
FE1	2.75			0.108		
SD	0.25	–	–	0.010	–	–
SE	0.25	–	–	0.010	–	–

Figure 18. VFBGA44 daisy chain - package connections (top view through package)

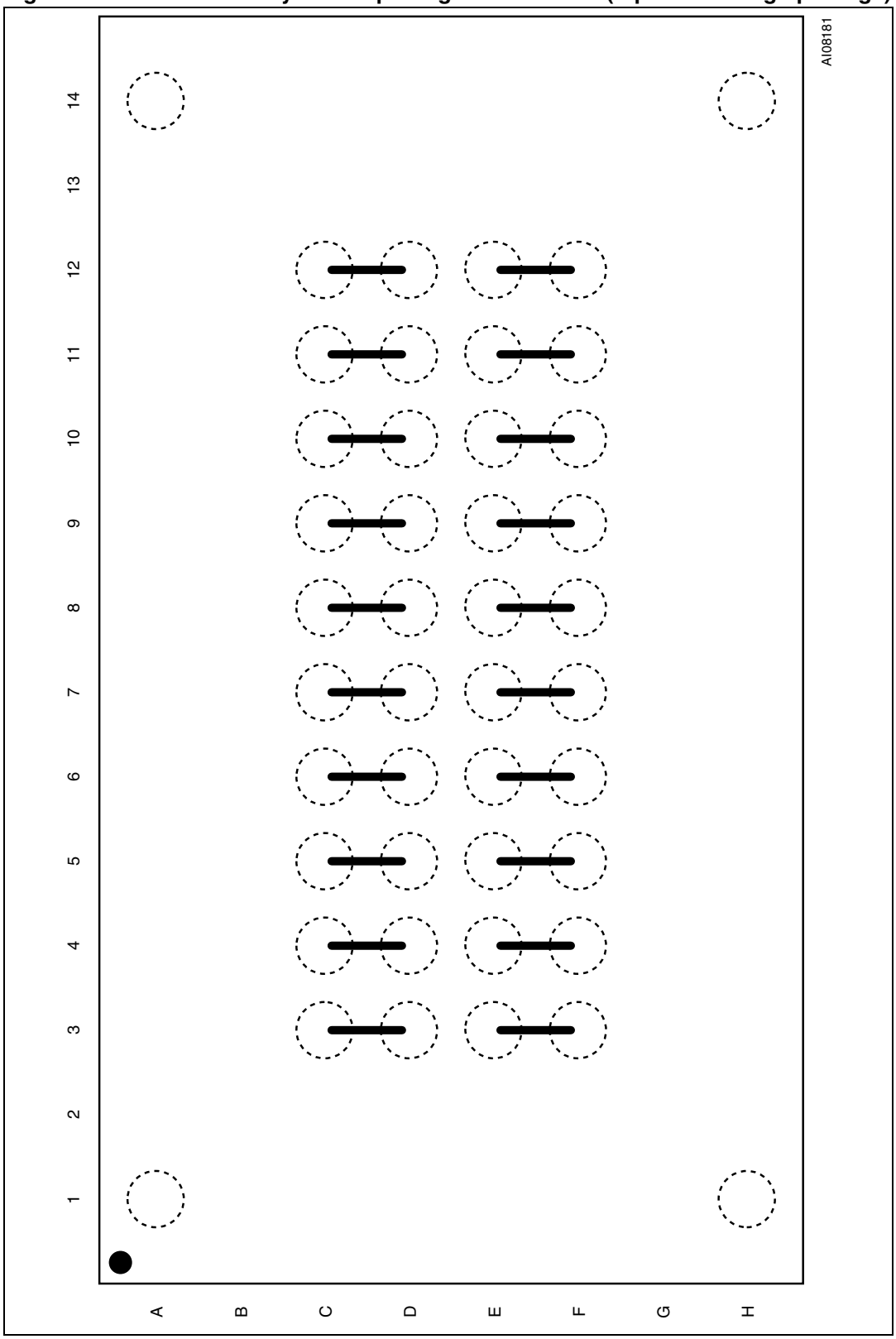

Figure 19. VFBGA44 daisy chain - PCB connection proposal (top view through package)

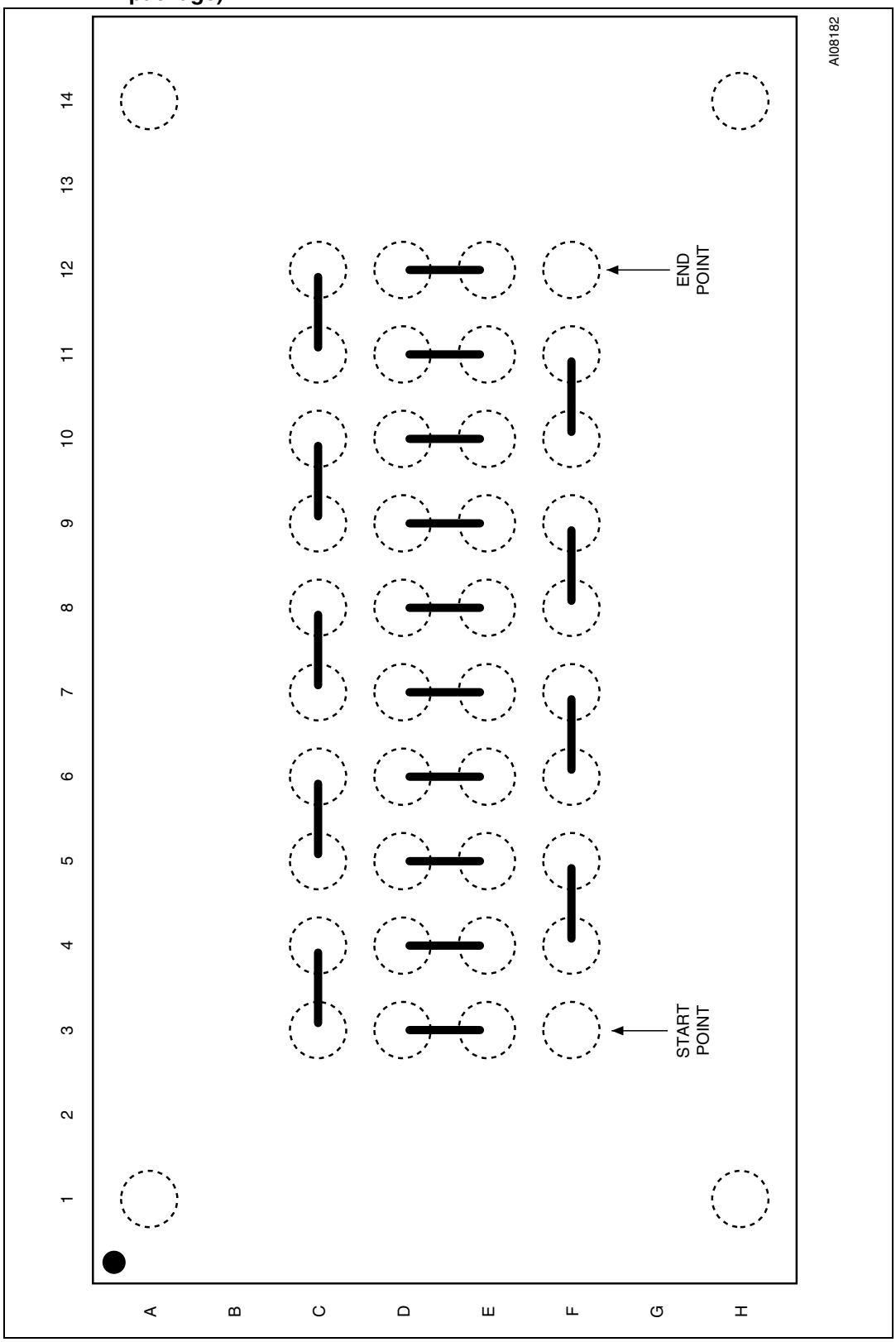

14 Part numbering

Table 29. Ordering information scheme

Example: M58LR128HD 70 ZB 5 E

Device Type

M58

Architecture

L = Multilevel, Multiple Bank, Burst Mode

Operating Voltage

R = V_{DD} = 1.7V to 2.0V, V_{DDQ} = 1.7V to 2.0V

Density

128 = 128 Mbit (x16)

Technology

H = 90nm technology

Parameter Location

C = Top Boot, Mux I/O

D = Bottom Boot, Mux I/O

Speed

70 = 70ns

Package

ZB = VFBGA44, 7.7 x 9mm, 0.50mm pitch

Temperature Range

5 = –25 to 85°C

Packing Option

E = ECOPACK® Package, Standard Packing

U = ECOPACK® Package, Tape & Reel Packing, 16mm

Devices are shipped from the factory with the memory content bits erased to ’1’.

For a list of available options (Speed, Package, etc.), for Daisy chain ordering information or for further information on any aspect of this device, please contact the Numonyx Sales Office nearest to you.

Appendix A Block address tables

Table 30. Top boot block addresses, M58LR128HC

Bank[1]	#	Size (KWord)	Address Range
Parameter Bank	0	16	7FC000-7FFFFF
	1	16	7F8000-7FBFFF
	2	16	7F4000-7F7FFF
	3	16	7F0000-7F3FFF
	4	64	7E0000-7EFFFF
	5	64	7D0000-7DFFFF
	6	64	7C0000-7CFFFF
	7	64	7B0000-7BFFFF
	8	64	7A0000-7AFFFF
	9	64	790000-79FFFF
	10	64	780000-78FFFF
Bank 1	11	64	770000-77FFFF
	12	64	760000-76FFFF
	13	64	750000-75FFFF
	14	64	740000-74FFFF
	15	64	730000-73FFFF
	16	64	720000-72FFFF
	17	64	710000-71FFFF
	18	64	700000-70FFFF
Bank 2	19	64	6F0000-6FFFFF
	20	64	6E0000-6EFFFF
	21	64	6D0000-6DFFFF
	22	64	6C0000-6CFFFF
	23	64	6B0000-6BFFFF
	24	64	6A0000-6AFFFF
	25	64	690000-69FFFF
	26	64	680000-68FFFF
Bank 3	27	64	670000-67FFFF
	28	64	660000-66FFFF
	29	64	650000-65FFFF
	30	64	640000-64FFFF
	31	64	630000-63FFFF
	32	64	620000-62FFFF
	33	64	610000-61FFFF
	34	64	600000-60FFFF

Table 30. Top boot block addresses, M58LR128HC (continued)

Bank[1]	#	Size (KWord)	Address Range
Bank 4	35	64	5F0000-5FFFFF
	36	64	5E0000-5EFFFF
	37	64	5D0000-5DFFFF
	38	64	5C0000-5CFFFF
	39	64	5B0000-5BFFFF
	40	64	5A0000-5AFFFF
	41	64	590000-59FFFF
	42	64	580000-58FFFF
Bank 5	43	64	570000-57FFFF
	44	64	560000-56FFFF
	45	64	550000-55FFFF
	46	64	540000-54FFFF
	47	64	530000-53FFFF
	48	64	520000-52FFFF
	49	64	510000-51FFFF
	50	64	500000-50FFFF
Bank 6	51	64	4F0000-4FFFFF
	52	64	4E0000-4EFFFF
	53	64	4D0000-4DFFFF
	54	64	4C0000-4CFFFF
	55	64	4B0000-4BFFFF
	56	64	4A0000-4AFFFF
	57	64	490000-49FFFF
	58	64	480000-48FFFF
Bank 7	59	64	470000-47FFFF
	60	64	460000-46FFFF
	61	64	450000-45FFFF
	62	64	440000-44FFFF
	63	64	430000-43FFFF
	64	64	420000-42FFFF
	65	64	410000-41FFFF
	66	64	400000-40FFFF

Table 30. Top boot block addresses, M58LR128HC (continued)

Bank[1]	#	Size (KWord)	Address Range
Bank 8	67	64	3F0000-3FFFFF
	68	64	3E0000-3EFFFF
	69	64	3D0000-3DFFFF
	70	64	3C0000-3CFFFF
	71	64	3B0000-3BFFFF
	72	64	3A0000-3AFFFF
	73	64	390000-39FFFF
	74	64	380000-38FFFF
Bank 9	75	64	370000-37FFFF
	76	64	360000-36FFFF
	77	64	350000-35FFFF
	78	64	340000-34FFFF
	79	64	330000-33FFFF
	80	64	320000-32FFFF
	81	64	310000-31FFFF
	82	64	300000-30FFFF
Bank 10	83	64	2F0000-2FFFFF
	84	64	2E0000-2EFFFF
	85	64	2D0000-2DFFFF
	86	64	2C0000-2CFFFF
	87	64	2B0000-2BFFFF
	88	64	2A0000-2AFFFF
	89	64	290000-29FFFF
	90	64	280000-28FFFF
Bank 11	91	64	270000-27FFFF
	92	64	260000-26FFFF
	93	64	250000-25FFFF
	94	64	240000-24FFFF
	95	64	230000-23FFFF
	96	64	220000-22FFFF
	97	64	210000-21FFFF
	98	64	200000-20FFFF

Table 30. Top boot block addresses, M58LR128HC (continued)

Bank[1]	#	Size (KWord)	Address Range
Bank 12	99	64	1F0000-1FFFFF
	100	64	1E0000-1EFFFF
	101	64	1D0000-1DFFFF
	102	64	1C0000-1CFFFF
	103	64	1B0000-1BFFFF
	104	64	1A0000-1AFFFF
	105	64	190000-19FFFF
	106	64	180000-18FFFF
Bank 13	107	64	170000-17FFFF
	108	64	160000-16FFFF
	109	64	150000-15FFFF
	110	64	140000-14FFFF
	111	64	130000-13FFFF
	112	64	120000-12FFFF
	113	64	110000-11FFFF
	114	64	100000-10FFFF
Bank 14	115	64	0F0000-0FFFFF
	116	64	0E0000-0EFFFF
	117	64	0D0000-0DFFFF
	118	64	0C0000-0CFFFF
	119	64	0B0000-0BFFFF
	120	64	0A0000-0AFFFF
	121	64	090000-09FFFF
	122	64	080000-08FFFF
Bank 15	123	64	070000-07FFFF
	124	64	060000-06FFFF
	125	64	050000-05FFFF
	126	64	040000-04FFFF
	127	64	030000-03FFFF
	128	64	020000-02FFFF
	129	64	010000-01FFFF
	130	64	000000-00FFFF

1. There are two Bank Regions: Bank Region 1 contains all the banks that are made up of main blocks only; Bank Region 2 contains the banks that are made up of the parameter and main blocks (Parameter Bank).

Table 31. Bottom boot block addresses, M58LR128HD

Bank[1]	#	Size (KWord)	Address Range
Bank 15	130	64	7F0000-7FFFFF
	129	64	7E0000-7EFFFF
	128	64	7D0000-7DFFFF
	127	64	7C0000-7CFFFF
	126	64	7B0000-7BFFFF
	125	64	7A0000-7AFFFF
	124	64	790000-79FFFF
	123	64	780000-78FFFF
Bank 14	122	64	770000-77FFFF
	121	64	760000-76FFFF
	120	64	750000-75FFFF
	119	64	740000-74FFFF
	118	64	730000-73FFFF
	117	64	720000-72FFFF
	116	64	710000-71FFFF
	115	64	700000-70FFFF
Bank 13	114	64	6F0000-6FFFFF
	113	64	6E0000-6EFFFF
	112	64	6D0000-6DFFFF
	111	64	6C0000-6CFFFF
	110	64	6B0000-6BFFFF
	109	64	6A0000-6AFFFF
	108	64	690000-69FFFF
	107	64	680000-68FFFF
Bank 12	106	64	670000-67FFFF
	105	64	660000-66FFFF
	104	64	650000-65FFFF
	103	64	640000-64FFFF
	102	64	630000-63FFFF
	101	64	620000-62FFFF
	100	64	610000-61FFFF
	99	64	600000-60FFFF

Table 31. Bottom boot block addresses, M58LR128HD (continued)

Bank[1]	#	Size (KWord)	Address Range
Bank 11	98	64	5F0000-5FFFFF
	97	64	5E0000-5EFFFF
	96	64	5D0000-5DFFFF
	95	64	5C0000-5CFFFF
	94	64	5B0000-5BFFFF
	93	64	5A0000-5AFFFF
	92	64	590000-59FFFF
	91	64	580000-58FFFF
Bank 10	90	64	570000-57FFFF
	89	64	560000-56FFFF
	88	64	550000-55FFFF
	87	64	540000-54FFFF
	86	64	530000-53FFFF
	85	64	520000-52FFFF
	84	64	510000-51FFFF
	83	64	500000-50FFFF
Bank 9	82	64	4F0000-4FFFFF
	81	64	4E0000-4EFFFF
	80	64	4D0000-4DFFFF
	79	64	4C0000-4CFFFF
	78	64	4B0000-4BFFFF
	77	64	4A0000-4AFFFF
	76	64	490000-49FFFF
	75	64	480000-48FFFF
Bank 8	74	64	470000-47FFFF
	73	64	460000-46FFFF
	72	64	450000-45FFFF
	71	64	440000-44FFFF
	70	64	430000-43FFFF
	69	64	420000-42FFFF
	68	64	410000-41FFFF
	67	64	400000-40FFFF

Table 31. Bottom boot block addresses, M58LR128HD (continued)

Bank[1]	#	Size (KWord)	Address Range
Bank 7	66	64	3F0000-3FFFFF
	65	64	3E0000-3EFFFF
	64	64	3D0000-3DFFFF
	63	64	3C0000-3CFFFF
	62	64	3B0000-3BFFFF
	61	64	3A0000-3AFFFF
	60	64	390000-39FFFF
	59	64	380000-38FFFF
Bank 6	58	64	370000-37FFFF
	57	64	360000-36FFFF
	56	64	350000-35FFFF
	55	64	340000-34FFFF
	54	64	330000-33FFFF
	53	64	320000-32FFFF
	52	64	310000-31FFFF
	51	64	300000-30FFFF
Bank 5	50	64	2F0000-2FFFFF
	49	64	2E0000-2EFFFF
	48	64	2D0000-2DFFFF
	47	64	2C0000-2CFFFF
	46	64	2B0000-2BFFFF
	45	64	2A0000-2AFFFF
	44	64	290000-29FFFF
	43	64	280000-28FFFF
Bank 4	42	64	270000-27FFFF
	41	64	260000-26FFFF
	40	64	250000-25FFFF
	39	64	240000-24FFFF
	38	64	230000-23FFFF
	37	64	220000-22FFFF
	36	64	210000-21FFFF
	35	64	200000-20FFFF

Table 31. Bottom boot block addresses, M58LR128HD (continued)

Bank[1]	#	Size (KWord)	Address Range
Bank 3	34	64	1F0000-1FFFFF
	33	64	1E0000-1EFFFF
	32	64	1D0000-1DFFFF
	31	64	1C0000-1CFFFF
	30	64	1B0000-1BFFFF
	29	64	1A0000-1AFFFF
	28	64	190000-19FFFF
	27	64	180000-18FFFF
Bank 2	26	64	170000-17FFFF
	25	64	160000-16FFFF
	24	64	150000-15FFFF
	23	64	140000-14FFFF
	22	64	130000-13FFFF
	21	64	120000-12FFFF
	20	64	110000-11FFFF
	19	64	1F0000-1FFFFF
Bank 1	18	64	0F0000-0FFFFF
	17	64	0E0000-0EFFFF
	16	64	0D0000-0DFFFF
	15	64	0C0000-0CFFFF
	14	64	0B0000-0BFFFF
	13	64	0A0000-0AFFFF
	12	64	090000-09FFFF
	11	64	080000-08FFFF
Parameter Bank	10	64	070000-07FFFF
	9	64	060000-06FFFF
	8	64	050000-05FFFF
	7	64	040000-04FFFF
	6	64	030000-03FFFF
	5	64	020000-02FFFF
	4	64	010000-01FFFF
	3	16	00C000-00FFFF
	2	16	008000-00BFFF
	1	16	004000-007FFF
	0	16	000000-003FFF

1. There are two Bank Regions: Bank Region 2 contains all the banks that are made up of main blocks only; Bank Region 1 contains the banks that are made up of the parameter and main blocks (Parameter Bank).

Appendix B Common Flash Interface

The Common Flash Interface is a JEDEC approved, standardized data structure that can be read from the Flash memory device. It allows a system software to query the device to determine various electrical and timing parameters, density information and functions supported by the memory. The system can interface easily with the device, enabling the software to upgrade itself when necessary.

When the Read CFI Query Command is issued the device enters CFI Query mode and the data structure is read from the memory. Tables *32*, *33*, *34*, *35*, *36*, *37*, *38*, *39*, *40* and *41* show the addresses used to retrieve the data. The Query data is always presented on the lowest order data outputs (ADQ0-ADQ7), the other outputs (ADQ8-ADQ15) are set to 0.

The CFI data structure also contains a security area where a 64 bit unique security number is written (see *Figure 4: Protection Register memory map*). This area can be accessed only in Read mode by the final user. It is impossible to change the security number after it has been written by Numonyx. Issue a Read Array command to return to Read mode.

Table 32. Query structure overview

Offset	Sub-section Name	Description
000h	Reserved	Reserved for algorithm-specific information
010h	CFI Query Identification String	Command set ID and algorithm data offset
01Bh	System Interface Information	Device timing & voltage information
027h	Device Geometry Definition	Flash device layout
P	Primary Algorithm-specific Extended Query table	Additional information specific to the Primary Algorithm (optional)
A	Alternate Algorithm-specific Extended Query table	Additional information specific to the Alternate Algorithm (optional)
080h	Security Code Area	Lock Protection Register Unique device Number and User Programmable OTP

1. The Flash memory display the CFI data structure when CFI Query command is issued. In this table are listed the main sub-sections detailed in Tables *33*, *34*, *35* and *36*. Query data is always presented on the lowest order data outputs.

Table 33. CFI query identification string

Offset	Sub-section Name	Description		Value
000h	0020h	Manufacturer Code		Numonyx
001h	882Eh 882Fh	Device Code	M58LR128HC M58LR128HD	Top Bottom
002h	reserved	Reserved		
003h	DRC	Die Revision Code		
004h-00Fh	reserved	Reserved		
010h 011h 012h	0051h 0052h 0059h	Query Unique ASCII String "QRY"		"Q" "R" "Y"
013h 014h	0001h 0000h	Primary Algorithm Command Set and Control Interface ID code 16 bit ID code defining a specific algorithm		
015h 016h	offset = P = 000Ah 0001h	Address for Primary Algorithm extended Query table (see *Table 36*)		p = 10Ah
017h 018h	0000h 0000h	Alternate Vendor Command Set and Control Interface ID Code second vendor - specified algorithm supported		NA
019h 01Ah	value = A = 0000h 0000h	Address for Alternate Algorithm extended Query table		NA

Table 34. CFI query system interface information

Offset	Data	Description	Value
01Bh	0017h	V_{DD} Logic Supply Minimum Program/Erase or Write voltage bit 7 to 4 BCD value in volts bit 3 to 0 BCD value in 100 millivolts	1.7V
01Ch	0020h	V_{DD} Logic Supply Maximum Program/Erase or Write voltage bit 7 to 4 BCD value in volts bit 3 to 0 BCD value in 100 millivolts	2V
01Dh	0085h	V_{PP} [Programming] Supply Minimum Program/Erase voltage bit 7 to 4 HEX value in volts bit 3 to 0 BCD value in 100 millivolts	8.5V
01Eh	0095h	V_{PP} [Programming] Supply Maximum Program/Erase voltage bit 7 to 4 HEX value in volts bit 3 to 0 BCD value in 100 millivolts	9.5V
01Fh	0004h	Typical time-out per single byte/word program = 2^n µs	16µs
020h	0009h	Typical time-out for Buffer Program = 2^n µs	512µs
021h	000Ah	Typical time-out per individual block erase = 2^n ms	1s
022h	0000h	Typical time-out for full chip erase = 2^n ms	NA
023h	0004h	Maximum time-out for word program = 2^n times typical	256µs
024h	0004h	Maximum time-out for Buffer Program = 2^n times typical	8192µs
025h	0002h	Maximum time-out per individual block erase = 2^n times typical	4s
026h	0000h	Maximum time-out for chip erase = 2^n times typical	NA

Table 35. Device geometry definition

	Offset	Data	Description	Value
	027h	0018h	Device Size = 2^n in number of bytes	16 MBytes
	028h 029h	0001h 0000h	Flash Device Interface Code description	x16 Async.
	02Ah 02Bh	0006h 0000h	Maximum number of bytes in multi-byte program or page = 2^n	64 Bytes
	02Ch	0002h	Number of identical sized erase block regions within the device bit 7 to 0 = x = number of Erase Block Regions	2
TOP DEVICES	02Dh 02Eh	007Eh 0000h	Erase Block Region 1 Information Number of identical-size erase blocks = 007Eh+1	127
TOP DEVICES	02Fh 030h	0000h 0002h	Erase Block Region 1 Information Block size in Region 1 = 0200h * 256 Byte	128 KByte
TOP DEVICES	031h 032h	0003h 0000h	Erase Block Region 2 Information Number of identical-size erase blocks = 0003h+1	4
TOP DEVICES	033h 034h	0080h 0000h	Erase Block Region 2 Information Block size in Region 2 = 0080h * 256 Byte	32 KByte
TOP DEVICES	035h 038h	Reserved	Reserved for future erase block region information	NA
BOTTOM DEVICES	02Dh 02Eh	0003h 0000h	Erase Block Region 1 Information Number of identical-size erase block = 0003h+1	4
BOTTOM DEVICES	02Fh 030h	0080h 0000h	Erase Block Region 1 Information Block size in Region 1 = 0080h * 256 bytes	32 KBytes
BOTTOM DEVICES	031h 032h	007Eh 0000h	Erase Block Region 2 Information Number of identical-size erase block = 007Eh+1	127
BOTTOM DEVICES	033h 034h	0000h 0002h	Erase Block Region 2 Information Block size in Region 2 = 0200h * 256 bytes	128 KBytes
BOTTOM DEVICES	035h 038h	Reserved	Reserved for future erase block region information	NA

Table 36. Primary Algorithm-Specific Extended Query Table

Offset	Data	Description	Value
(P)h = 10Ah	0050h 0052h 0049h	Primary Algorithm extended Query table unique ASCII string “PRI”	"P" "R" "I"
(P+3)h =10Dh	0031h	Major version number, ASCII	"1"
(P+4)h = 10Eh	0033h	Minor version number, ASCII	"3"
(P+5)h = 10Fh (P+7)h = 111h (P+8)h = 112h	00E6h 0003h 0000h 0000h	Extended Query table contents for Primary Algorithm. Address (P+5)h contains less significant byte. bit 0 Chip Erase supported(1 = Yes, 0 = No) bit 1 Erase Suspend supported(1 = Yes, 0 = No) bit 2 Program Suspend supported(1 = Yes, 0 = No) bit 3 Legacy Lock/Unlock supported(1 = Yes, 0 = No) bit 4 Queued Erase supported(1 = Yes, 0 = No) bit 5 Instant individual block locking supported(1 = Yes, 0 = No) bit 6 Protection bits supported(1 = Yes, 0 = No) bit 7 Page mode read supported(1 = Yes, 0 = No) bit 8 Synchronous read supported(1 = Yes, 0 = No) bit 9 Simultaneous operation supported(1 = Yes, 0 = No) bit 10 to 31 Reserved; undefined bits are ‘0’. If bit 31 is ’1’ then another 31 bit field of optional features follows at the end of the bit-30 field.	No Yes Yes No No Yes Yes Yes Yes Yes
(P+9)h = 113h	0001h	Supported Functions after Suspend Read Array, Read Status Register and CFI Query bit 0 Program supported after Erase Suspend (1 = Yes, 0 = No) bit 7 to 1 Reserved; undefined bits are ‘0’	Yes
(P+A)h = 114h (P+B)h = 115h	0003h 0000h	Block Protect Status Defines which bits in the Block Status Register section of the Query are implemented. bit 0 Block protect Status Register Lock/Unlock bit active (1 = Yes, 0 = No) bit 1 Block Lock Status Register Lock-Down bit active (1 = Yes, 0 = No) bit 15 to 2 Reserved for future use; undefined bits are ‘0’	Yes Yes
(P+C)h = 116h	0018h	V_{DD} Logic Supply Optimum Program/Erase voltage (highest performance) bit 7 to 4 HEX value in volts bit 3 to 0 BCD value in 100 mV	1.8V
(P+D)h = 117h	0090h	V_{PP} Supply Optimum Program/Erase voltage bit 7 to 4 HEX value in volts bit 3 to 0 BCD value in 100 mV	9V

Table 37. Protection Register information

Offset	Data	Description	Value
(P+E)h = 118h	0002h	Number of protection register fields in JEDEC ID space. 0000h indicates that 256 fields are available.	2
(P+F)h = 119h	0080h	Protection Field 1: Protection Description	80h
(P+10)h = 11Ah	0000h	Bits 0-7 Lower byte of protection register address	00h
(P+ 11)h = 11Bh	0003h	Bits 8-15 Upper byte of protection register address Bits 16-23 2^n bytes in factory pre-programmed region	8 Bytes
(P+12)h = 11Ch	0003h	Bits 24-31 2^n bytes in user programmable region	8 Bytes
(P+13)h = 11Dh	0089h	Protection Register 2: Protection Description	89h
(P+14)h = 11Eh	0000h	Bits 0-31 protection register address	00h
(P+15)h = 11Fh	0000h	Bits 32-39 n number of factory programmed regions (lower byte)	00h
(P+16)h = 120h	0000h	Bits 40-47 n number of factory programmed regions (upper byte)	00h
(P+17)h = 121h	0000h	Bits 48-55 2^n bytes in factory programmable region	0
(P+18)h = 122h	0000h	Bits 56-63 n number of user programmable regions (lower byte)	0
(P+19)h = 123h	0000h	Bits 64-71 n number of user programmable regions (upper byte)	0
(P+1A)h = 124h	0010h	Bits 72-79 2^n bytes in user programmable region	16
(P+1B)h = 125h	0000h		0
(P+1C)h = 126h	0004h		16

Table 38. Burst Read information

Offset	Data	Description	Value
(P+1D)h = 127h	0003h	Page-mode read capability bits 0-7 n' such that 2^n HEX value represents the number of read-page bytes. See offset 0028h for device word width to determine page-mode data output width.	8 Bytes
(P+1E)h = 128h	0004h	Number of synchronous mode read configuration fields that follow.	4
(P+1F)h = 129h	0001h	Synchronous mode read capability configuration 1 bit 3-7 Reserved bit 0-2 n' such that 2^{n+1} HEX value represents the maximum number of continuous synchronous reads when the device is configured for its maximum word width. A value of 07h indicates that the device is capable of continuous linear bursts that will output data until the internal burst counter reaches the end of the device's burstable address space. This field's 3-bit value can be written directly to the read configuration register bit 0-2 if the device is configured for its maximum word width. See offset 0028h for word width to determine the burst data output width.	4
(P+20)h = 12Ah	0002h	Synchronous mode read capability configuration 2	8
(P-21)h = 12Bh	0003h	Synchronous mode read capability configuration 3	16
(P+22)h = 12Ch	0007h	Synchronous mode read capability configuration 4	Cont.

Table 39. Bank and Erase Block region information(1) (2)

Flash memory (top)		Flash memory (bottom)		Description
Offset	Data	Offset	Data	
(P+23)h = 12Dh	02h	(P+23)h = 12Dh	02h	Number of Bank Regions within the device

1. The variable P is a pointer which is defined at CFI offset 015h.
2. Bank Regions. There are two Bank Regions, see *Table 30* and *Table 31*.

Table 40. Bank and Erase Block region 1 information

M58LR128HC (top)		M58LR128HD (bottom)		Description
Offset	Data	Offset	Data	
(P+24)h = 12Eh	0Fh	(P+24)h = 12Eh	01h	Number of identical banks within Bank Region 1
(P+25)h = 12Fh	00h	(P+25)h = 12Fh	00h	
(P+26)h = 130h	11h	(P+26)h = 130h	11h	Number of program or erase operations allowed in Bank Region 1: Bits 0-3: Number of simultaneous program operations Bits 4-7: Number of simultaneous erase operations
(P+27)h = 131h	00h	(P+27)h = 131h	00h	Number of program or erase operations allowed in other banks while a bank in same region is programming Bits 0-3: Number of simultaneous program operations Bits 4-7: Number of simultaneous erase operations
(P+28)h = 132h	00h	(P+28)h = 132h	00h	Number of program or erase operations allowed in other banks while a bank in this region is erasing Bits 0-3: Number of simultaneous program operations Bits 4-7: Number of simultaneous erase operations
(P+29)h = 133h	01h	(P+29)h = 133h	02h	Types of erase block regions in Bank Region 1 n = number of erase block regions with contiguous same-size erase blocks. Symmetrically blocked banks have one blocking region(2).
(P+2A)h = 134h	07h	(P+2A)h = 134h	03h	Bank Region 1 Erase Block Type 1 Information Bits 0-15: n+1 = number of identical-sized erase blocks Bits 16-31: n×256 = number of bytes in erase block region
(P+2B)h = 135h	00h	(P+2B)h = 135h	00h	
(P+2C)h = 136h	00h	(P+2C)h = 136h	80h	
(P+2D)h = 137h	02h	(P+2D)h = 137h	00h	
(P+2E)h = 138h	64h	(P+2E)h = 138h	64h	Bank Region 1 (Erase Block Type 1) Minimum block erase cycles × 1000
(P+2F)h = 139h	00h	(P+2F)h = 139h	00h	

Table 40. Bank and Erase Block region 1 information (continued)

M58LR128HC (top)		M58LR128HD (bottom)		Description
Offset	Data	Offset	Data	
(P+30)h = 13Ah	01h	(P+30)h = 13Ah	01h	Bank Region 1 (Erase Block Type 1): BIts per cell, internal ECC Bits 0-3: bits per cell in erase region Bit 4: reserved for “internal ECC used” BIts 5-7: reserved
(P+31)h = 13Bh	03h	(P+31)h = 13Bh	03h	Bank Region 1 (Erase Block Type 1): Page mode and Synchronous mode capabilities Bit 0: Page-mode reads permitted Bit 1: Synchronous reads permitted Bit 2: Synchronous writes permitted Bits 3-7: reserved
		(P+32)h = 13Ch	06h	Bank Region 1 Erase Block Type 2 Information Bits 0-15: n+1 = number of identical-sized erase blocks Bits 16-31: n×256 = number of bytes in erase block region
		(P+33)h = 13Dh	00h	
		(P+34)h = 13Eh	00h	
		(P+35)h = 13Fh	02h	
		(P+36)h = 140h	64h	Bank Region 1 (Erase Block Type 2) Minimum block erase cycles × 1000
		(P+37)h = 141h	00h	
		(P+38)h = 142h	01h	Bank Regions 1 (Erase Block Type 2): BIts per cell, internal ECC Bits 0-3: bits per cell in erase region Bit 4: reserved for “internal ECC used” BIts 5-7: reserved
		(P+39)h = 143h	03h	Bank Region 1 (Erase Block Type 2): Page mode and Synchronous mode capabilities Bit 0: Page-mode reads permitted Bit 1: Synchronous reads permitted Bit 2: Synchronous writes permitted Bits 3-7: reserved

1. The variable P is a pointer which is defined at CFI offset 015h.
2. Bank Regions. There are two Bank Regions, see *Table 30* to *Table 31*.
3. Although the device supports Page Read mode, this is not described in the datasheet as its use is not advantageous in a multiplexed device.

Table 41. Bank and Erase Block region 2 information

M58LR128HC (top)		M58LR128HD (bottom)		Description
Offset	Data	Offset	Data	
(P+32)h = 13Ch	01h	(P+3A)h = 144h	0Fh	Number of identical banks within Bank Region 2
(P+33)h = 13Dh	00h	(P+3B)h = 145h	00h	
(P+34)h = 13Eh	11h	(P+3C)h = 146h	11h	Number of program or erase operations allowed in Bank Region 2: Bits 0-3: Number of simultaneous program operations Bits 4-7: Number of simultaneous erase operations
(P+35)h = 13Fh	00h	(P+3D)h = 147h	00h	Number of program or erase operations allowed in other banks while a bank in this region is programming Bits 0-3: Number of simultaneous program operations Bits 4-7: Number of simultaneous erase operations
(P+36)h = 140h	00h	(P+3E)h = 148h	00h	Number of program or erase operations allowed in other banks while a bank in this region is erasing Bits 0-3: Number of simultaneous program operations Bits 4-7: Number of simultaneous erase operations
(P+37)h = 141h	02h	(P+3F)h = 149h	01h	Types of erase block regions in Bank Region 2 n = number of erase block regions with contiguous same-size erase blocks. Symmetrically blocked banks have one blocking region.(2)
(P+38)h = 142h	06h	(P+40)h = 14Ah	07h	Bank Region 2 Erase Block Type 1 Information Bits 0-15: n+1 = number of identical-sized erase blocks Bits 16-31: n×256 = number of bytes in erase block region
(P+39)h = 143h	00h	(P+41)h = 14Bh	00h	
(P+3A)h = 144h	00h	(P+42)h = 14Ch	00h	
(P+3B)h = 145h	02h	(P+43)h = 14Dh	02h	
(P+3C)h = 146h	64h	(P+44)h = 14Eh	64h	Bank Region 2 (Erase Block Type 1) Minimum block erase cycles × 1000
(P+3D)h = 147h	00h	(P+45)h = 14Fh	00h	
(P+3E)h = 148h	01h	(P+46)h = 150h	01h	Bank Region 2 (Erase Block Type 1): BIts per cell, internal ECC Bits 0-3: bits per cell in erase region Bit 4: reserved for “internal ECC used” BIts 5-7: reserved

Table 41. Bank and Erase Block region 2 information (continued)

M58LR128HC (top)		M58LR128HD (bottom)		Description
Offset	Data	Offset	Data	
(P+3F)h = 149h	03h	(P+47)h = 151h	03h	Bank Region 2 (Erase Block Type 1):Page mode and Synchronous mode capabilities (defined in *Table 38*) Bit 0: Page-mode reads permitted Bit 1: Synchronous reads permitted Bit 2: Synchronous writes permitted Bits 3-7: reserved
(P+40)h = 14Ah	03h			Bank Region 2 Erase Block Type 2 Information Bits 0-15: n+1 = number of identical-sized erase blocks Bits 16-31: n×256 = number of bytes in erase block region
(P+41)h = 14Bh	00h			
(P+42)h = 14Ch	80h			
(P+43)h = 14Dh	00h			
(P+44)h = 14Eh	64h			Bank Region 2 (Erase Block Type 2) Minimum block erase cycles × 1000
(P+45)h = 14Fh	00h			
(P+46)h = 150h	01h			Bank Region 2 (Erase Block Type 2): BIts per cell, internal ECC Bits 0-3: bits per cell in erase region Bit 4: reserved for “internal ECC used” BIts 5-7: reserved
(P+47)h = 151h	03h			Bank Region 2 (Erase Block Type 2): Page mode and Synchronous mode capabilities (defined in *Table 38*) Bit 0: Page-mode reads permitted Bit 1: Synchronous reads permitted Bit 2: Synchronous writes permitted Bits 3-7: reserved
(P+48)h = 152h		(P+48)h = 152h		Feature Space definitions
(P+49)h = 153h		(P+43)h = 153h		Reserved

1. The variable P is a pointer which is defined at CFI offset 015h.
2. Bank Regions. There are two Bank Regions, see *Table 30* and *Table 31*.
3. Although the device supports Page Read mode, this is not described in the datasheet as its use is not advantageous in a multiplexed device.

Appendix C Flowcharts and pseudo codes

Figure 20. Program flowchart and pseudo code

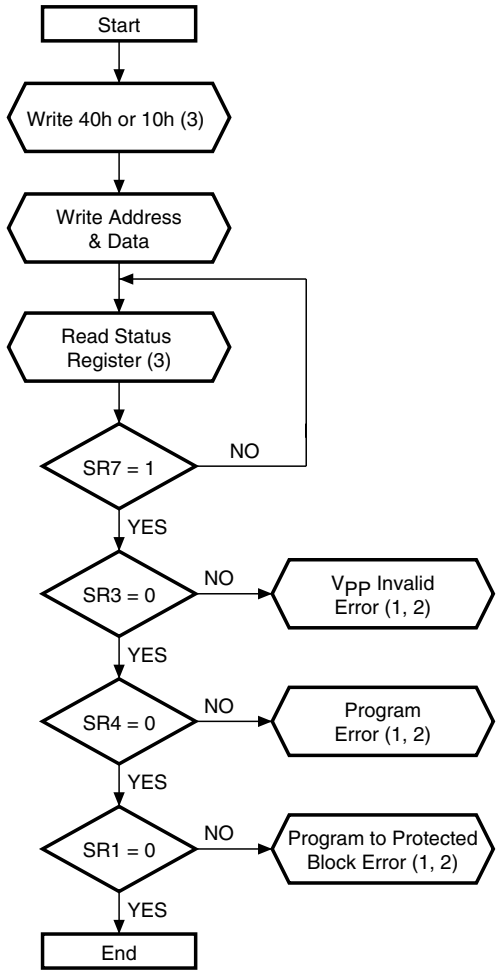


```
program_command (addressToProgram, dataToProgram) {:

        writeToFlash (addressToProgram, 0x40);
        /*writeToFlash (addressToProgram, 0x10);*/
                                        /*see note (3)*/

         writeToFlash (addressToProgram, dataToProgram) ;
         /*Memory enters read status state after
         the Program Command*/

      do {
         status_register=readFlash (addressToProgram);
                                        "see note (3)";
         /* E or G must be toggled*/

         }  while (status_register.SR7== 0) ;

if  (status_register.SR3==1) /*VPP invalid error */
      error_handler ( ) ;

if  (status_register.SR4==1) /*program error */
      error_handler ( ) ;

if  (status_register.SR1==1) /*program to protect block error */
      error_handler ( ) ;

}
```

AI06170b

1. Status check of SR1 (Protected Block), SR3 (V_{PP} Invalid) and SR4 (Program Error) can be made after each program operation or after a sequence.
2. If an error is found, the Status Register must be cleared before further Program/Erase Controller operations.
3. Any address within the bank can equally be used.

Figure 21. Blank Check flowchart and pseudo code

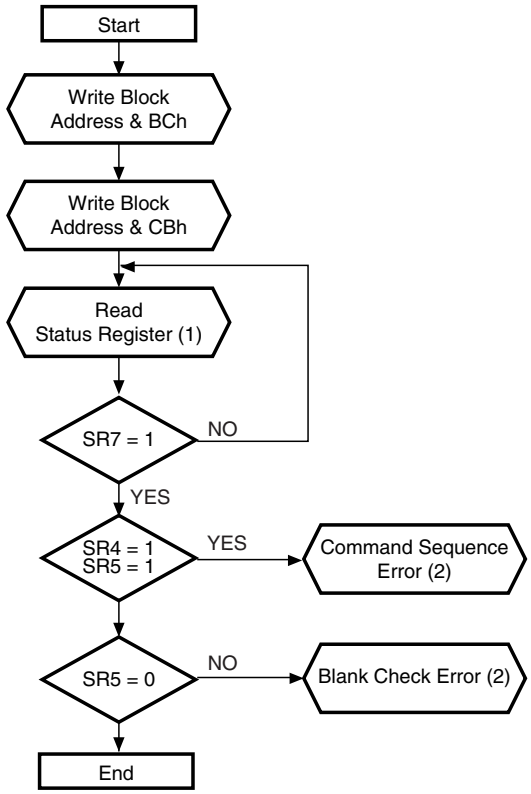


```
blank_check_command (blockToCheck) {

        writeToFlash (blockToCheck, 0xBC);


        writeToFlash (blockToCheck, 0xCB);
        /* Memory enters read status state after
        the Blank Check Command */


        do {
            status_register = readFlash (blockToCheck);
                                /* see note (1) */
            /* E or G must be toggled */

            } while (status_register.SR7==0);



        if (status_register.SR4==1) && (status_register.SR5==1)
        /* command sequence error */
                error_handler () ;


        if (status_register.SR5==1)
        /* Blank Check error */
                error_handler () ;

}
```

ai10520c

1. Any address within the bank can equally be used.
2. If an error is found, the Status Register must be cleared before further Program/Erase operations.

Figure 22. Buffer Program flowchart and pseudo code

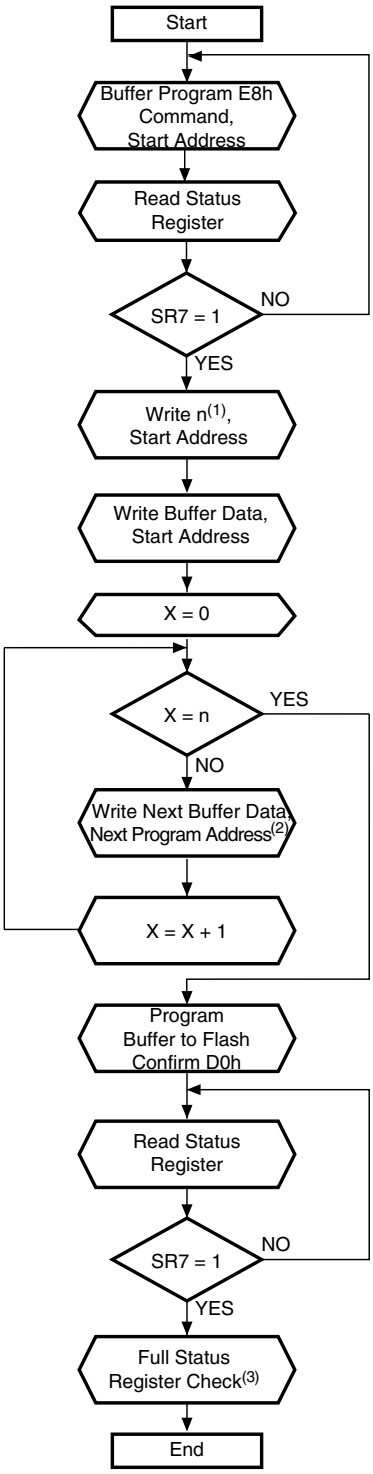


```
Buffer_Program_command (Start_Address,  n, buffer_Program[] )
 /* buffer_Program [] is an array structure used to store the address and
data to be programmed to the Flash memory (the address must be within
the segment Start Address and Start Address+n) */
{
 do {writeToFlash (Start_Address, 0xE8) ;

status_register=readFlash (Start_Address);

 } while (status_register.SR7==0);

 writeToFlash (Start_Address, n);

 writeToFlash (buffer_Program[0].address, buffer_Program[0].data);
/*buffer_Program[0].address is the start address*/

 x = 0;

 while (x<n)

 { writeToFlash (buffer_Program[x+1].address, buffer_Program[x+1].data);

      x++;

  }

  writeToFlash (Start_Address, 0xD0);

do {status_register=readFlash (Start_Address);

      } while (status_register.SR7==0);

full_status_register_check();

}
```

AI08913b

1. n + 1 is the number of data being programmed.
2. Next Program data is an element belonging to buffer_Program[].data; Next Program address is an element belonging to buffer_Program[].address
3. Routine for Error Check by reading SR3, SR4 and SR1.

Figure 23. Program Suspend & Resume flowchart and pseudo code

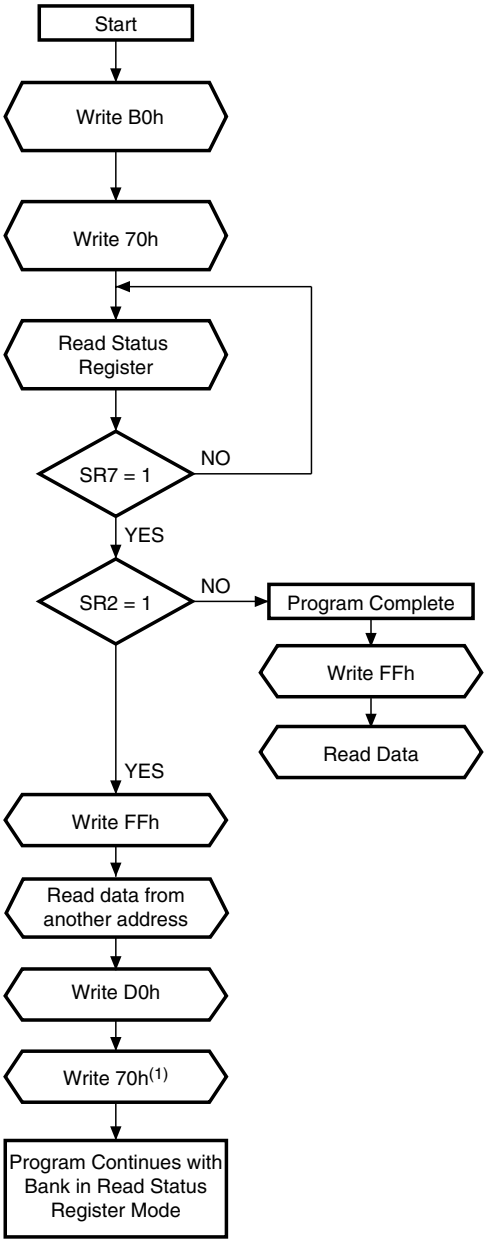


```
program_suspend_command   ( ) {
      writeToFlash (any_address, 0xB0) ;

      writeToFlash (bank_address, 0x70) ;
      /* read status register to check if
      program has already completed */

  do {
      status_register=readFlash (bank_address) ;
      /* Ē or Ḡ must be toggled*/

      } while (status_register.SR7== 0) ;

if  (status_register.SR2==0)  /*program completed */

      {  writeToFlash (bank_address, 0xFF)  ;
         read_data ( ) ;
         /*The device returns to Read Array
         (as if program/erase suspend was not issued).*/

       }
else
      {  writeToFlash (bank_address, 0xFF)  ;

         read_data ( ); /*read data from another address*/

         writeToFlash (any_address, 0xD0) ;
         /*write 0xD0 to resume program*/

         writeToFlash (bank_address, 0x70) ;
         /*read status register to check if program has completed */

       }
}
```

AI10117b

1. The Read Status Register command (Write 70h) can be issued just before or just after the Program Resume command.

Figure 24. Block Erase flowchart and pseudo code

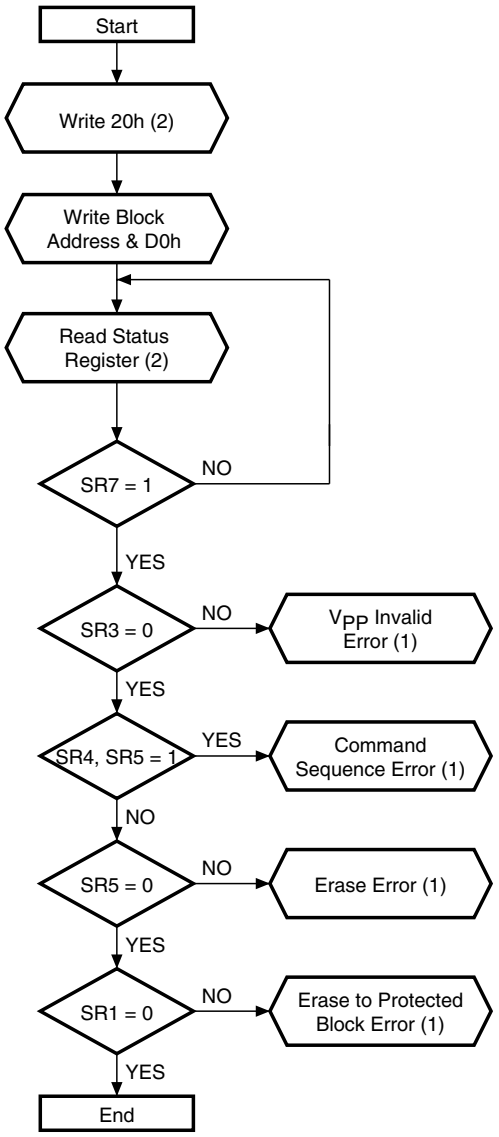


```
erase_command   ( blockToErase )  {
        writeToFlash (blockToErase, 0x20) ;
                                /*see note (2) */

        writeToFlash (blockToErase, 0xD0) ;
        /* Memory enters read status state after
        the Erase Command */


    do {
        status_register=readFlash (blockToErase) ;
                                        /* see note (2) */
         /* E or G must be toggled*/



        }  while (status_register.SR7== 0) ;


if  (status_register.SR3==1) /*VPP invalid error */
        error_handler ( ) ;


if  ( (status_register.SR4==1) && (status_register.SR5==1) )
/* command sequence error */
        error_handler ( ) ;


if  ( (status_register.SR5==1) )
/* erase error */
        error_handler ( ) ;


if  (status_register.SR1==1) /*program to protect block error */
        error_handler ( ) ;


}
```

AI10976

1. If an error is found, the Status Register must be cleared before further Program/Erase operations.
2. Any address within the bank can equally be used.

Figure 25. Erase Suspend & Resume flowchart and pseudo code

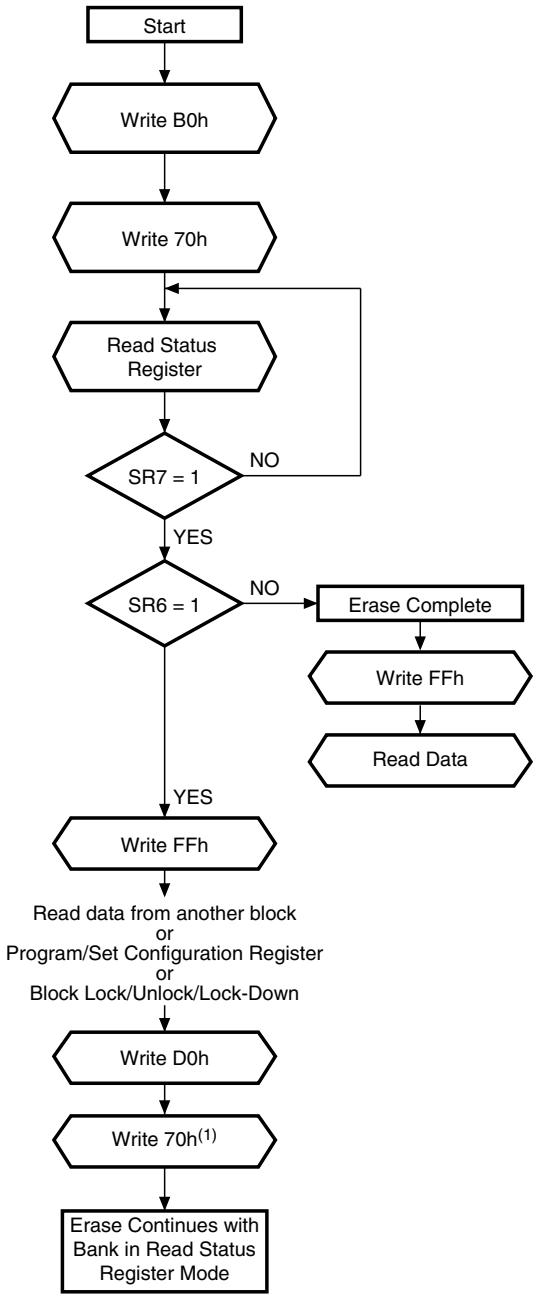


```
erase_suspend_command   ( ) {
        writeToFlash (bank_address, 0xB0) ;

        writeToFlash (bank_address, 0x70) ;
        /* read status register to check if
        erase has already completed */

    do {
        status_register=readFlash (bank_address) ;
        /* Ē or Ḡ must be toggled*/

        }  while (status_register.SR7== 0) ;

if  (status_register.SR6==0)  /*erase completed */

        {  writeToFlash (bank_address, 0xFF)  ;

           read_data ( ) ;
           /*The device returns to Read Array
           (as if program/erase suspend was not issued).*/
        }
else
        {  writeToFlash (bank_address, 0xFF)  ;

           read_program_data ( );

           /*read or program data from another block*/

           writeToFlash (bank_address, 0xD0) ;
           /*write 0xD0 to resume erase*/

           writeToFlash (bank_address, 0x70) ;
           /*read status register to check if erase has completed */
        }
}
```

AI13882

1. The Read Status Register command (Write 70h) can be issued just before or just after the Erase Resume command.

Figure 26. Locking operations flowchart and pseudo code

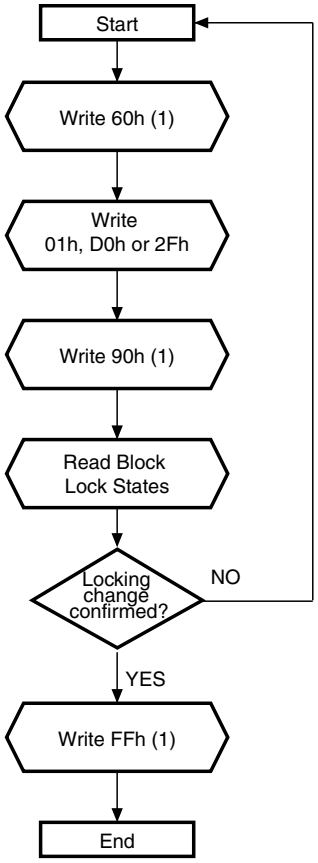


```
locking_operation_command   (address, lock_operation)  {
      writeToFlash (address, 0x60) ; /*configuration setup*/
                                     /* see note (1) */

      if  (lock_operation==LOCK)  /*to protect the block*/
            writeToFlash (address, 0x01)  ;
      else if  (lock_operation==UNLOCK)  /*to unprotect the block*/
            writeToFlash (address, 0xD0)  ;
      else if  (lock_operation==LOCK-DOWN)  /*to lock the block*/
            writeToFlash (address, 0x2F)  ;

            writeToFlash (address, 0x90) ;
                                 /*see note (1) */

      if  (readFlash (address) ! = locking_state_expected)
                error_handler () ;
            /*Check the locking state (see Read Block Signature table )*/

      writeToFlash (address, 0xFF) ; /*Reset to Read Array mode*/
                        /*see note (1) */

}
```

AI06176b

1. Any address within the bank can equally be used.

Figure 27. Protection Register Program flowchart and pseudo code

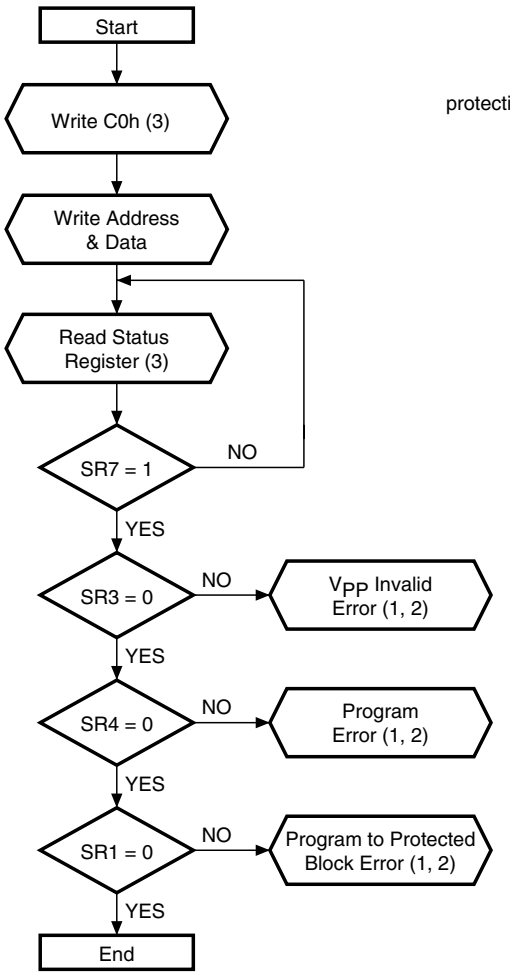


```
protection_register_program_command (addressToProgram, dataToProgram) {:
                    writeToFlash (addressToProgram, 0xC0) ;
                                    /*see note (3) */

                    writeToFlash (addressToProgram, dataToProgram) ;
                    /*Memory enters read status state after
                    the Program Command*/

                  do {
                    status_register=readFlash (addressToProgram) ;
                                                  /* see note (3) */
                    /* Ē or Ḡ must be toggled*/

                    } while (status_register.SR7== 0) ;

  if (status_register.SR3==1) /*VPP invalid error */
      error_handler ( ) ;

  if (status_register.SR4==1) /*program error */
      error_handler ( ) ;

  if (status_register.SR1==1) /*program to protect block error */
      error_handler ( ) ;

  }
```

AI06177b

1. Status check of SR1 (Protected Block), SR3 (V_{PP} Invalid) and SR4 (Program Error) can be made after each program operation or after a sequence.
2. If an error is found, the Status Register must be cleared before further Program/Erase Controller operations.
3. Any address within the bank can equally be used.

Figure 28. Buffer Enhanced Factory Program flowchart and pseudo code

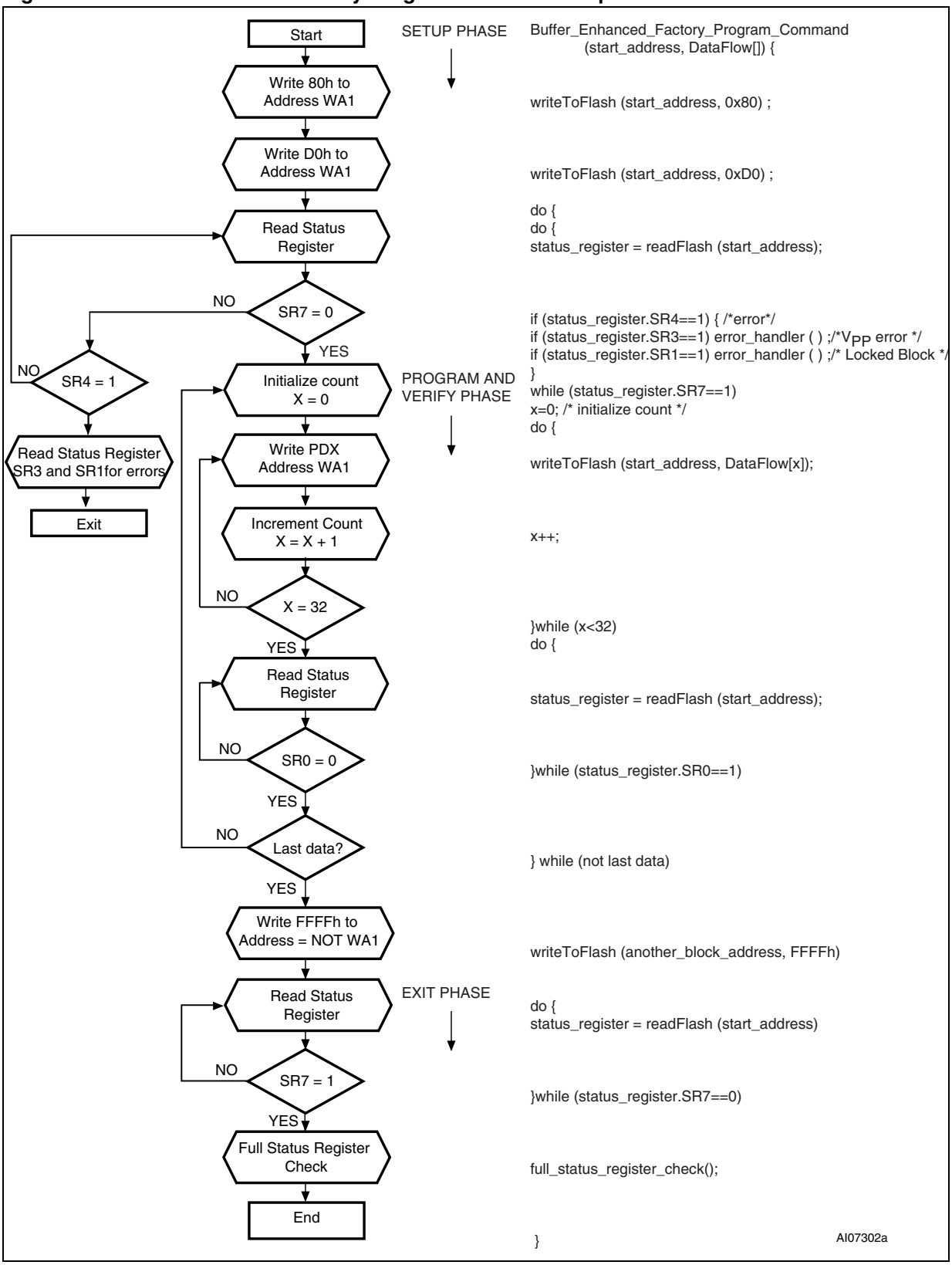

Appendix D Command interface state tables

Table 42. Command Interface states - modify table, next state(1)

Current CI State		Command Input											
		Read Array(2) (FFh)	Program Setup(3)(4) (10/40h)	Buffer Program (3)(4) (E8h)	Block Erase, Setup(3)(4) (20h)	BEFP Setup (80h)	Blank Check setup (BCh)	Erase Confirm P/E Resume, Block Unlock confirm, BEFP Confirm(3)(4) (D0h)	Blank Check confirm (CBh)	Buffer Program, Program/ Erase Suspend (B0h)	Read Status Register (70h)	Clear Status Register (5) (50h)	Read Electronic Signature , Read CFI Query (90h, 98h)
Ready		Ready	Program Setup	BP Setup	Erase Setup	BEFP Setup	Blank Check setup	Ready					
Lock/CR Setup		Ready (Lock Error)						Ready (unlock block)	Ready (Lock Error)				
OTP	**Setup**	OTP Busy											
	Busy	OTP Busy	IS in OTP Busy	OTP busy	IS in OTP Busy	OTP Busy							
	IS in OTP busy	OTP Busy											
Program	**Setup**	Program Busy											
	Busy	Program Busy	IS in Program Busy	Program Busy	IS in Program Busy	Program Busy				Program Suspend	Program Busy		
	IS in Program Busy	Program Busy											
	Suspend	PS	IS in PS	PS	IS in Program Suspend	PS		Program Busy	Program Suspend				
	IS in PS	Program Suspend											
Buffer Program	**Setup**	Buffer Program Load 1 (give word count load (N-1));											
	Buffer Load 1	if N=0 go to Buffer Program Confirm. Else (N ≠ 0) go to Buffer Program Load 2 (data load)											
	Buffer Load 2	Buffer Program Confirm when count =0; Else Buffer Program Load 2 (note: Buffer Program will fail at this point if any block address is different from the first address)											
	Confirm	Ready (error)						BP Busy	Ready (error)				
	Busy	BP Busy	IS in BP Busy	BP Busy	IS in BP Busy	BP Busy				BP Suspend	Buffer Program Busy		
	IS in BP Busy	Buffer Program Busy											
	Suspend	BP Suspend	IS in BP Suspend	BP Suspend	IS in BP Suspend	BP Suspend		BP busy	Buffer Program Suspend				
	IS in BP Suspend	Buffer Program Suspend											

Table 42. Command Interface states - modify table, next state[1] (continued)

Current CI State		Command Input											
		Read Array[2] (FFh)	Program Setup[3][4] (10/40h)	Buffer Program [3][4] (E8h)	Block Erase, Setup[3][4] (20h)	BEFP Setup (80h)	Blank Check setup (BCh)	Erase Confirm P/E Resume, Block Unlock confirm, BEFP Confirm[3][4] (D0h)	Blank Check confirm (CBh)	Buffer Program, Program/ Erase Suspend (B0h)	Read Status Register (70h)	Clear Status Register [5] (50h)	Read Electronic Signature , Read CFI Query (90h, 98h)
Erase	Setup	Ready (error)						Erase Busy	Ready (error)				
	Busy	Erase Busy	IS in Erase Busy	Erase Busy	IS in Erase Busy		Erase Busy			Erase Suspend	Erase Busy		
	IS in Erase Busy	Erase Busy											
	Suspend	Erase Suspend	Program in ES	BP in ES	IS in Erase Suspend		ES	Erase Busy	Erase Suspend				
	IS in ES	Erase Suspend											
Program in Erase Suspend	Setup	Program Busy in Erase Suspend											
	Busy	Program Busy in ES	IS in Program Busy in ES	Program Busy in ES	IS in Program Busy in ES		Program Busy in ES			PS in ES	Program Busy in Erase Suspend		
	IS in Program busy in ES	Program busy in Erase Suspend											
	Suspend	PS in ES	IS in PS in ES	PS in ES	IS in Program Suspend in ES		PS in ES	Program Busy in ES	Program Suspend in Erase Suspend				
	IS in PS in ES	Program Suspend in Erase Suspend											
Buffer Program in Erase Suspend	Setup	Buffer Program Load 1 in Erase Suspend (give word count load (N-1)); if N=0 go to Buffer Program confirm. Else (N ≠ 0) go to Buffer Program Load 2											
	Buffer Load 1	Buffer Program Load 2 in Erase Suspend (data load)											
	Buffer Load 2	Buffer Program Confirm in Erase Suspend when count =0; Else Buffer Program Load 2 in Erase Suspend (note: Buffer Program will fail at this point if any block address is different from the first address)											
	Confirm	Erase Suspend (sequence error)						BP Busy in ES	Erase Suspend (sequence error)				
	Busy	BP Busy in ES	IS in BP Busy in ES	BP busy in ES	IS in BP busy in ES		BP Busy in ES			BP Suspend in ES	Buffer Program Busy in ES		
	IS in BP busy in ES	Buffer Program Busy in Erase Suspend											
	Suspend	BP Suspend in ES	IS in BP Suspend in ES	BP Suspend in ES	IS in BP Suspend in Erase Suspend		BP Suspend in ES	BP Busy in Erase Suspend	Buffer Program Suspend in Erase Suspend				
	IS in BP Suspend in ES	BP Suspend in Erase Suspend											

Table 42. Command Interface states - modify table, next state(1) (continued)

Current CI State		Command Input											
		Read Array(2) (FFh)	Program Setup(3)(4) (10/40h)	Buffer Program (3)(4) (E8h)	Block Erase, Setup(3)(4) (20h)	BEFP Setup (80h)	Blank Check setup (BCh)	Erase Confirm P/E Resume, Block Unlock confirm, BEFP Confirm(3)(4) (D0h)	Blank Check confirm (CBh)	Buffer Program, Program/ Erase Suspend (B0h)	Read Status Register (70h)	Clear Status Register (5) (50h)	Read Electronic Signature , Read CFI Query (90h, 98h)
Blank Check	Setup	Ready (error)							Blank Check busy	Ready (error)			
	Busy	Blank Check busy	IS in Blank Check busy	Blank Check busy	IS in Blank Check busy	Blank Check busy							
Lock/CR Setup in Erase Suspend		Erase Suspend (Lock Error)						Erase Suspend	Erase Suspend (Lock Error)				
Buffer EFP	Setup	Ready (error)						BEFP Busy	Ready (error)				
	Busy	BEFP Busy(6)											

1. CI = Command Interface, CR = Configuration register, BEFP = Buffer Enhanced Factory program, P/E C = Program/Erase controller, IS = Illegal State, BP = Buffer Program, ES = Erase Suspend.
2. At power-up, all banks are in Read Array mode. Issuing a Read Array command to a busy bank, results in undetermined data output.
3. The two cycle command should be issued to the same bank address.
4. If the P/E C is active, both cycles are ignored.
5. The Clear Status Register command clears the SR error bits except when the P/E C. is busy or suspended.
6. BEFP is allowed only when Status Register bit SR0 is reset to '0'. BEFP is busy if Block Address is first BEFP Address. Any other commands are treated as data.

Table 43. Command Interface states - modify table, next output state(1) (2)

Current CI State	Command Input											
	Read Array (3) (FFh)	Program Setup(4) (5) (10/40h)	Buffer Program (E8h)	Block Erase, Setup(4) (5) (20h)	BEFP Setup (80h)	Blank Check setup (BCh)	Erase Confirm P/E Resume, Block Unlock confirm, BEFP Confirm(4)(5) (D0h)	Blank Check confirm (CBh)	Program/ Erase Suspend (B0h)	Read Status Register (70h)	Clear Status Register (50h)	Read Electronic signature, Read CFI Query (90h, 98h)
Program Setup	Status Register											
Erase Setup												
OTP Setup												
Program Setup in Erase Suspend												
BEFP Setup												
BEFP Busy												
Buffer Program Setup												
Buffer Program Load 1												
Buffer Program Load 2												
Buffer Program Confirm												
Buffer Program Setup in Erase Suspend												
Buffer Program Load 1 in Erase Suspend												
Buffer Program Load 2 in Erase Suspend												
Buffer Program Confirm in Erase Suspend												
Blank Check setup												
Lock/CR Setup												
Lock/CR Setup in Erase Suspend												

Table 43. Command Interface states - modify table, next output state(1) (2) (continued)

Current CI State	Command Input											
	Read Array (3) (FFh)	Program Setup(4) (5) (10/40h)	Buffer Program (E8h)	Block Erase, Setup(4) (5) (20h)	BEFP Setup (80h)	Blank Check setup (BCh)	Erase Confirm P/E Resume, Block Unlock confirm, BEFP Confirm(4)(5) (D0h)	Blank Check confirm (CBh)	Program/ Erase Suspend (B0h)	Read Status Register (70h)	Clear Status Register (50h)	Read Electronic signature, Read CFI Query (90h, 98h)
OTP Busy	Array	Status Register					Output Unchanged			Status Register	Output Unchanged	Status Register
Ready												Electronic Signature/ CFI
Program Busy												
Erase Busy												
Buffer Program Busy												
Program/Erase Suspend												
Buffer Program Suspend												
Program Busy in Erase Suspend												
Buffer Program Busy in Erase Suspend												
Program Suspend in Erase Suspend												
Buffer Program Suspend in Erase Suspend												
Blank Check busy												
Illegal State	Output Unchanged											

1. The output state shows the type of data that appears at the outputs if the bank address is the same as the command address. A bank can be placed in Read Array, Read Status Register, Read Electronic Signature or Read CFI mode, depending on the command issued. Each bank remains in its last output state until a new command is issued to that bank. The next state does not depend on the bank output state.
2. CI = Command Interface, CR = Configuration Register, BEFP = Buffer Enhanced Factory Program, P/E. C. = Program/Erase Controller.
3. At Power-Up, all banks are in Read Array mode. Issuing a Read Array command to a busy bank, results in undetermined data output.
4. The two cycle command should be issued to the same bank address.
5. If the P/E.C. is active, both cycles are ignored.

Table 44. Command interface states - lock table, next state[1]

Current CI State		Command Input							
		Lock/CR Setup[2] (60h)	OTP Setup[2] (C0h)	Block Lock Confirm (01h)	Block Lock-Down Confirm (2Fh)	Set CR Confirm (03h)	Block Address (WA0)[3] (XXXXh)	Illegal Command[4]	P/E C operation completed[5]
Ready		Lock/CR Setup	OTP Setup	Ready					N/A
Lock/CR Setup		Ready (Lock error)		Ready			Ready (Lock error)		N/A
OTP	**Setup**	OTP Busy							N/A
	Busy	IS in OTP Busy		OTP Busy					Ready
	IS in OTP busy	OTP Busy							IS Ready
Program	**Setup**	Program Busy							N/A
	Busy	IS in Program Busy		Program Busy					Ready
	IS in Program busy	Program busy							IS Ready
	Suspend	IS in PS		Program Suspend					N/A
	IS in PS	Program Suspend							
Buffer Program	**Setup**	Buffer Program Load 1 (give word count load (N-1));							N/A
	Buffer Load 1	Buffer Program Load 2[6]					Exit	see note [6]	N/A
	Buffer Load 2	Buffer Program Confirm when count =0; Else Buffer Program Load 2 (note: Buffer Program will fail at this point if any block address is different from the first address)							N/A
	Confirm	Ready (error)							N/A
	Busy	IS in BP Busy		Buffer Program Busy					Ready
	IS in Buffer Program busy	Buffer Program Busy							IS Ready
	Suspend	IS in BP Suspend		Buffer Program Suspend					N/A
	IS in BP Suspend	Buffer Program Suspend							
Erase	**Setup**	Ready (error)							N/A
	Busy	IS in Erase Busy		Erase Busy					Ready
	IS in Erase busy	Erase Busy							IS ready
	Suspend	Lock/CR Setup in ES	IS in ES	Erase Suspend					N/A
	IS in ES	Erase Suspend							

Table 44. Command interface states - lock table, next state[1] (continued)

Current CI State		Command Input							
		Lock/CR Setup[2] (60h)	OTP Setup[2] (C0h)	Block Lock Confirm (01h)	Block Lock-Down Confirm (2Fh)	Set CR Confirm (03h)	Block Address (WA0)[3] (XXXXh)	Illegal Command[4]	P/E C operation completed[5]
Program in Erase Suspend	Setup	Program Busy in Erase Suspend							N/A
	Busy	IS in Program busy in ES		Program Busy in Erase Suspend					ES
	IS in Program busy in ES	Program Busy in Erase Suspend							IS in ES
	Suspend	IS in PS in ES		Program Suspend in Erase Suspend					N/A
	IS in PS in ES	Program Suspend in Erase Suspend							
Buffer Program in Erase Suspend	Setup	Buffer Program Load 1 in Erase Suspend (give word count load (N-1))							N/A
	Buffer Load 1	Buffer Program Load 2 in Erase Suspend[7]					Exit	see note [7]	
	Buffer Load 2	Buffer Program Confirm in Erase Suspend when count =0; Else Buffer Program Load 2 in Erase Suspend (note: Buffer Program will fail at this point if any block address is different from the first address)							
	Confirm	Erase Suspend (sequence error)							
	Busy	IS in BP busy in ES		Buffer Program Busy in Erase Suspend					ES
	IS in BP busy in ES	BP busy in ES							IS in ES
	Suspend	IS in BP suspend in ES		Buffer Program Suspend in Erase Suspend					N/A
	IS in BP Suspend in ES	Buffer Program Suspend in Erase Suspend							
Blank Check	Setup	Ready (error)							N/A
	Blank Check busy	IS in Blank Check busy		Blank Check busy					Ready
Lock/CR Setup in ES		Erase Suspend (Lock error)		Erase Suspend			Erase Suspend (Lock error)		N/A
BEFP	Setup	Ready (error)							N/A
	Busy	BEFP Busy[8]					Exit	BEFP Busy[8]	N/A

1. CI = Command Interface, CR = Configuration register, BEFP = Buffer Enhanced Factory program, P/E C = Program/Erase controller, IS = Illegal State, BP = Buffer program, ES = Erase suspend, WA0 = Address in a block different from first BEFP address.
2. If the P/E C is active, both cycle are ignored.
3. BEFP Exit when Block Address is different from first Block Address and data are FFFFh.
4. Illegal commands are those not defined in the command set.
5. N/A: not available. In this case the state remains unchanged.
6. If N=0 go to Buffer Program Confirm. Else (not =0) go to Buffer Program Load 2 (data load)
7. If N=0 go to Buffer Program Confirm in Erase suspend. Else (not =0) go to Buffer Program Load 2 in Erase suspend.
8. BEFP is allowed only when Status Register bit SR0 is set to '0'. BEFP is busy if Block Address is first BEFP Address. Any other commands are treated as data.

Table 45. Command interface states - lock table, next output state (1) (2)

<table>
<tr><th rowspan="2">Current CI State</th><th colspan="10">Command Input</th></tr>
<tr><th>Lock/CR Setup(3)(60h)</th><th>Blank Check setup (BCh)</th><th>OTP Setup(3) (C0h)</th><th>Blank Check confirm (CBh)</th><th>Block Lock Confirm (01h)</th><th>Block Lock-Down Confirm (2Fh)</th><th>Set CR Confirm (03h)</th><th>BEFP Exit(4) (FFFFh)</th><th>Illegal Command (5)</th><th>P. E./C. Operation Completed</th></tr>
<tr><td>Program Setup</td><td colspan="9" rowspan="13">Status Register</td><td rowspan="15">Output Unchanged</td></tr>
<tr><td>Erase Setup</td></tr>
<tr><td>OTP Setup</td></tr>
<tr><td>Program Setup in Erase Suspend</td></tr>
<tr><td>BEFP Setup</td></tr>
<tr><td>BEFP Busy</td></tr>
<tr><td>Buffer Program Setup</td></tr>
<tr><td>Buffer Program Load 1</td></tr>
<tr><td>Buffer Program Load 2</td></tr>
<tr><td>Buffer Program Confirm</td></tr>
<tr><td>Buffer Program Setup in Erase Suspend</td></tr>
<tr><td>Buffer Program Load 1 in Erase Suspend</td></tr>
<tr><td>Buffer Program Load 2 in Erase Suspend</td></tr>
<tr><td>Buffer Program Confirm in Erase Suspend</td></tr>
<tr><td>Blank Check setup</td></tr>
<tr><td>Lock/CR Setup</td><td colspan="6" rowspan="2">Status Register</td><td rowspan="2">Array</td><td colspan="2" rowspan="2">Status Register</td></tr>
<tr><td>Lock/CR Setup in Erase Suspend</td></tr>
</table>

Table 45. Command interface states - lock table, next output state (continued)(1) (2)

Current CI State	Command Input									
	Lock/CR Setup(3)(60h)	Blank Check setup (BCh)	OTP Setup(3) (C0h)	Blank Check confirm (CBh)	Block Lock Confirm (01h)	Block Lock-Down Confirm (2Fh)	Set CR Confirm (03h)	BEFP Exit(4) (FFFFh)	Illegal Command (5)	P. E./C. Operation Completed
OTP Busy	Status Register			Output Unchanged				Array	Output Unchanged	
Ready										
Program Busy										
Erase Busy										
Buffer Program Busy										
Program/Erase Suspend										
Buffer Program Suspend										
Program Busy in Erase Suspend										
Buffer Program Busy in Erase Suspend										
Program Suspend in Erase Suspend										
Buffer Program Suspend in Erase Suspend										
Blank Check busy										
Illegal State	Output Unchanged									

1. The output state shows the type of data that appears at the outputs if the bank address is the same as the command address. A bank can be placed in Read Array, Read Status Register, Read Electronic Signature or Read CFI mode, depending on the command issued. Each bank remains in its last output state until a new command is issued to that bank. The next state does not depend on the bank's output state.
2. CI = Command Interface, CR = Configuration Register, BEFP = Buffer Enhanced Factory Program, P/E. C. = Program/Erase Controller.
3. If the P/E.C. is active, both cycles are ignored.
4. BEFP Exit when Block Address is different from first Block Address and data are FFFFh.
5. Illegal commands are those not defined in the command set.

Revision history

Table 46. Document revision history

Date	Revision	Changes
12-Oct-2006	0.1	Initial release.
26-Feb-2007	1	Document status promoted from Target Specification to full Datasheet. The *Set Configuration Register* command is accepted during Block Erase Suspend. *Appendix D: Command interface state tables* updated. Small text changes.
13-Nov-2007	2	Applied Numonyx branding.

Please Read Carefully:

INFORMATION IN THIS DOCUMENT IS PROVIDED IN CONNECTION WITH NUMONYX™ PRODUCTS. NO LICENSE, EXPRESS OR IMPLIED, BY ESTOPPEL OR OTHERWISE, TO ANY INTELLECTUAL PROPERTY RIGHTS IS GRANTED BY THIS DOCUMENT. EXCEPT AS PROVIDED IN NUMONYX'S TERMS AND CONDITIONS OF SALE FOR SUCH PRODUCTS, NUMONYX ASSUMES NO LIABILITY WHATSOEVER, AND NUMONYX DISCLAIMS ANY EXPRESS OR IMPLIED WARRANTY, RELATING TO SALE AND/OR USE OF NUMONYX PRODUCTS INCLUDING LIABILITY OR WARRANTIES RELATING TO FITNESS FOR A PARTICULAR PURPOSE, MERCHANTABILITY, OR INFRINGEMENT OF ANY PATENT, COPYRIGHT OR OTHER INTELLECTUAL PROPERTY RIGHT.

Numonyx products are not intended for use in medical, life saving, life sustaining, critical control or safety systems, or in nuclear facility applications.

Numonyx may make changes to specifications and product descriptions at any time, without notice.

Numonyx, B.V. may have patents or pending patent applications, trademarks, copyrights, or other intellectual property rights that relate to the presented subject matter. The furnishing of documents and other materials and information does not provide any license, express or implied, by estoppel or otherwise, to any such patents, trademarks, copyrights, or other intellectual property rights.

Designers must not rely on the absence or characteristics of any features or instructions marked “reserved” or “undefined.” Numonyx reserves these for future definition and shall have no responsibility whatsoever for conflicts or incompatibilities arising from future changes to them.

Contact your local Numonyx sales office or your distributor to obtain the latest specifications and before placing your product order.

Copies of documents which have an order number and are referenced in this document, or other Numonyx literature may be obtained by visiting Numonyx's website at http://www.numonyx.com.

Numonyx StrataFlash is a trademark or registered trademark of Numonyx or its subsidiaries in the United States and other countries.

*Other names and brands may be claimed as the property of others.

Copyright © 11/5/7, Numonyx, B.V., All Rights Reserved.