RoHS

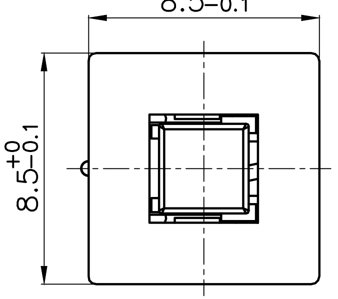

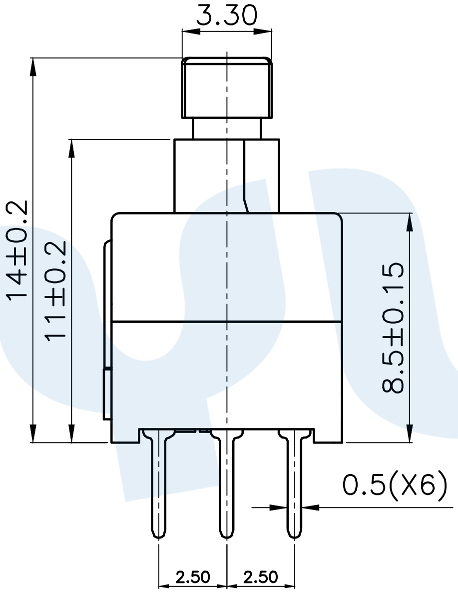

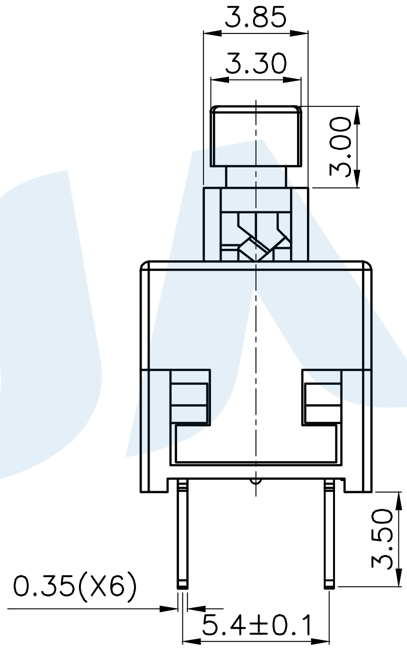

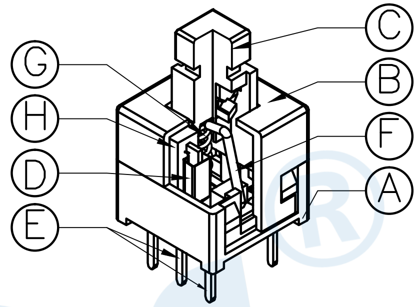

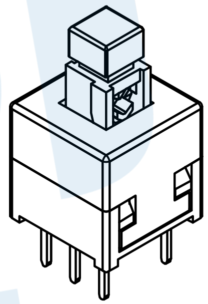

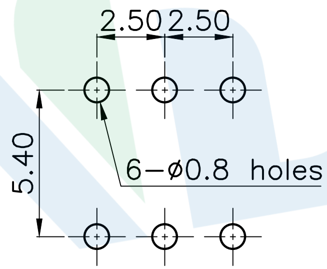

PCB Layout(Pattern Side)

NO.	Operating Type	Part No.	Operating force	Travel
1	Push To Lock	TK−6830−1	240±50gf	2.4±0.2
2	Push No Sound No Lock	TK−6830−2	240±50gf	2.4±0.2

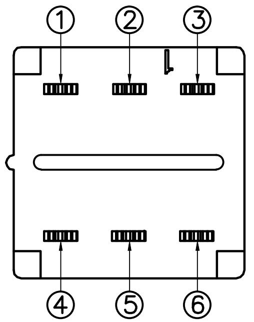

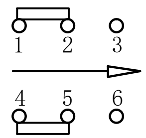

Circuit Diagram

NO.	Name	Number	Qty	Materil	Remarks
Ⓗ	Injection Terminal		2	Nylon	Black
Ⓖ	Spring		1	SUS	Natural
Ⓕ	Crochet Needle		1	SUS	Natural
Ⓔ	Terminal		6	Brass	Silvering
Ⓓ	Reed		2	Phosphorus Copper	Silvering
Ⓒ	Button		1	POM	White
Ⓑ	Cover		1	POM	Black
Ⓐ	Base		1	PBT	Black

YUANDI® Yuandi Electronics Co,Ltd

angle	±2°	design	date	name: BUTTON SWITCH
10~30	±0.30	Review	date	
5~10	±0.20	Approved	date	name: TK−6830−□
~ 5	±0.10	Drawing number:		
Tolerance not specified		Proportion 1:1	unit mm	gape number A4

modify | Review | Approved