molex
one company › a world of innovation

This document was generated on 05/26/2010

PLEASE CHECK WWW.MOLEX.COM FOR LATEST PART INFORMATION

Part Number: 0537801570

Status: Active

Overview: panelmate_125mm_049_pitch_ultra_lowprofile

Description: 1.25mm (.049") Pitch PanelMate™ Header, Surface Mount, Right Angle, 1.90mm (.075") Height, Lead-free, 15 Circuits

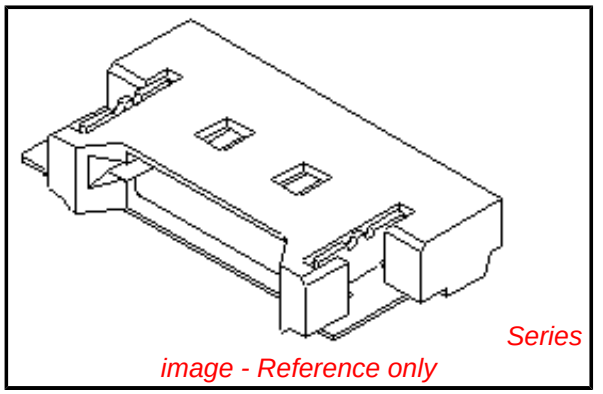

image - Reference only

Documents:

3D Model
Drawing (PDF)
Product Specification PS-51146-010 (PDF)
Product Specification PS-51146-012 (PDF)
RoHS Certificate of Compliance (PDF)

Agency Certification

CSA	LR19980
UL	E29179

General

Product Family	PCB Headers
Series	53780
Application	Wire-to-Board
Overview	panelmate_125mm_049_pitch_ultra_lowprofile
Product Name	PanelMate™

Physical

Breakaway	No
Circuits (Loaded)	15
Color - Resin	Natural
Durability (mating cycles max)	50
First Mate / Last Break	No
Flammability	94V-0
Glow-Wire Compliant	No
Guide to Mating Part	No
Keying to Mating Part	None
Lock to Mating Part	None
Material - Metal	Phosphor Bronze
Material - Plating Mating	Gold
Material - Plating Termination	Tin
Number of Rows	1
Orientation	Right Angle
PCB Locator	No
PCB Retention	Yes
Packaging Type	Embossed Tape on Reel
Pitch - Mating Interface (in)	0.049 In
Pitch - Mating Interface (mm)	1.25 mm
Polarized to PCB	No
Shrouded	Fully
Stackable	No
Temperature Range - Operating	-40°C to +85°C
Termination Interface: Style	Surface Mount

Electrical

Current - Maximum per Contact	1A
Voltage - Maximum	125V

Material Info

Reference - Drawing Numbers

Packaging Specification	SPK-53780-ET

EU RoHS
ELV and RoHS Compliant
REACH SVHC
Not Reviewed
Halogen-Free Status
Not Reviewed

China RoHS

Need more information on product environmental compliance?

Email productcompliance@molex.com
For a multiple part number RoHS Certificate of Compliance, click here

Please visit the Contact Us section for any non-product compliance questions.

Search Parts in this Series
53780Series

Mates With
51146 PanelMate™ Wire-to-Board Receptacle Housing

Product Specification	PS-51146-010, PS-51146-012, RPS-51146-020, RPS-51146-022, RPS-51146-023, RPS-51146-025, RPS-51146-026, RPS-51146-027, RPS-51146-028, RPS-51146-029
Sales Drawing	SD-53780-003, SD-53780-004

This document was generated on 05/26/2010

PLEASE CHECK WWW.MOLEX.COM FOR LATEST PART INFORMATION

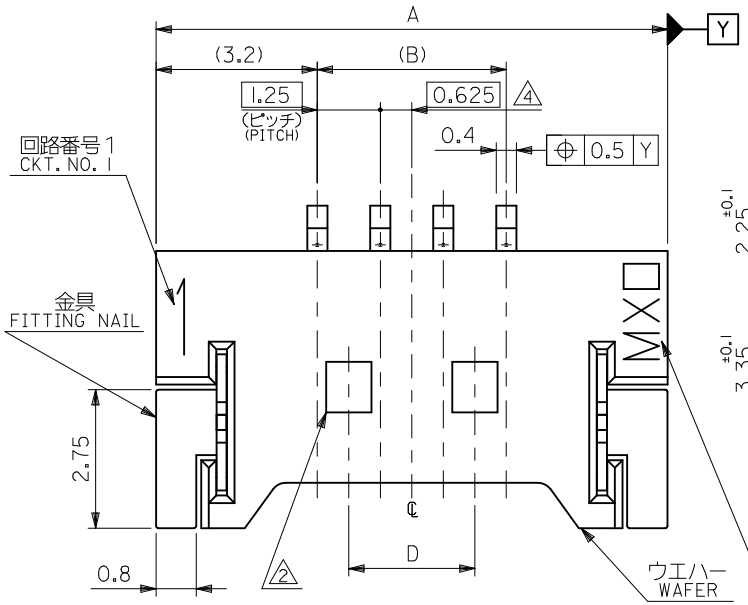

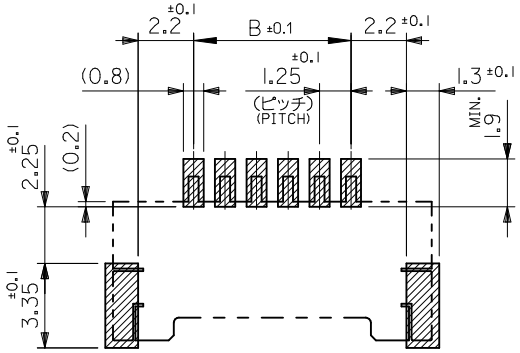

参考基板レイアウト
RECOMMENDED P.C.BOARD PATTERN DIM. (REF.)

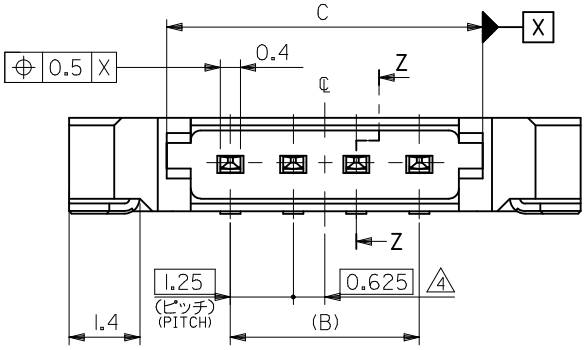

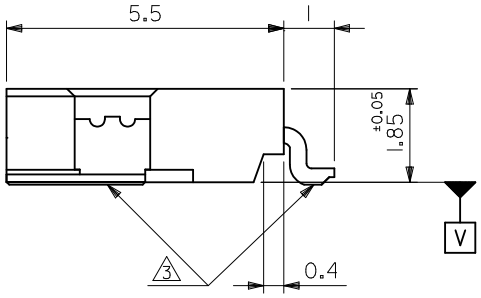

注記 NOTES

1. 嵌合相手：51146 シリーズ
   MATES WITH : 51146 SERIES
2. ロック窓は2、3極品は1箇所、4極品以上は2箇所とする。
   LOCKING WINDOW : ONE PLACE FOR 2 AND 3 CIRCUIT PRODUCTS
   AND TWO PLACES FOR MORE THAN 3 CIRCUIT PRODUCTS.
3. 基準面 V からのソルダーテールと金具の半田付け面のズレ量は、上方向に 0.05MAX. 下方向 0.15MAX. とし、20極以下の相互のバラツキ量は 0.1MAX. とする。
   MISALIGNMENT OF SOLDER TAIL AND FITTING NAIL FROM V
   : UPPER DIRECTION 0.05MAX.
   : LOWER DIRECTION 0.15MAX.
   : OFFSET BETWEEN UPPER AND LOWER 0.1MAX. (UNDER 20 CKTS.)
4. 偶数極の製品に適用。
   APPLY EVEN CIRCUIT PRODUCTS.
5. 材質 MATERIAL
   ウエハー WAFER：PPS, UL94V-0
   ピン：リン青銅 PIN : PHOSPHOR BRONZE
   コンタクト部：金メッキ 0.2 マイクロメートル以上
   CONTACT AREA : GOLD 0.2 MICROMETER MINIMUM
   テール部：錫メッキ 3.0 マイクロメートル以上
   TAIL AREA : TIN 3.0 MICROMETER MINIMUM
   下地メッキ：ニッケルメッキ 1.0 マイクロメートル以上
   UNDER PLATING : NICKEL 1.0 MICROMETER MINIMUM
   金具：リン青銅 FITTING NAIL : PHOSPHOR BRONZE
   錫メッキ 3.0 マイクロメートル以上
   TIN 3.0 MICROMETER MINIMUM
   下地メッキ：ニッケルメッキ 1.0 マイクロメートル以上
   UNDER PLATING : NICKEL 1.0 MICROMETER MINIMUM
6. 本製品は 53780-**10/-**18 の鉛フリー品である。
   THIS PRODUCT IS LEAD FREE OF 53780-**10/-**18.
7. ELV及びRoHS適合品
   ELV & RoHS COMPLIANT.

E	D	C	B	A	EMBOSSED PACKAGE / オーダー番号 ORDER No.	CKT. 極数
16.25	22.5	38.77	36.25	42.65	53780-3070	30
8.75	22.5	26.27	23.75	30.15	-2070	20
7.5	20	23.77	21.25	27.65	-1870	18
6.25	16.25	20.02	17.5	23.9	-1570	15
5	15	18.77	16.25	22.65	-1470	14
3.75	12.5	16.27	13.75	20.15	-1270	12
2.5	10	13.77	11.25	17.65	-1070	10
2.5	8.75	12.52	10	16.4	-0970	9
1.25	7.5	11.27	8.75	15.15	-0870	8
1.25	6.25	10.02	7.5	13.9	-0770	7
〃	5	8.77	6.25	12.65	-0670	6
〃	3.75	7.52	5	11.4	-0570	5
〃	2.5	6.27	3.75	10.15	-0470	4
〃	〃	5.02	2.5	8.9	-0370	3
〃	〃	3.77	1.25	7.65	53780-0270	2

CONNECTOR SERIES NO. 53780-**19

REVISED
EC NO: J2010-1927 2010/03/25
DRWN:SKUROSE 2010/03/26
CH'KD:KASAKAWA
APPR:NUKITA 2010/03/29
DESCRIPTION
REV

GENERAL TOLERANCES (UNLESS SPECIFIED)

10 UNDER	±0.2
10 OVER 30 UNDER	±0.25
30 OVER	±0.3
ANGULAR ±3 °	

DRAFT WHERE APPLICABLE MUST REMAIN WITHIN DIMENSIONS

DIMENSION STYLE: MM ONLY
SCALE: ---
DESIGN UNITS: METRIC
THIRD ANGLE PROJECTION

DRAWN BY: T.UENO DATE: '04/04/15
CHECKED BY: M.SASAO DATE: '04/04/15
APPROVED BY: M.SASAO DATE: '04/04/15

TITLE: 1.25 W/B CONN WAFER ASSY FOR SMT

MOLEX INCORPORATED

MATERIAL NO.: SEE CHART
DOCUMENT NO.: SD-53780-003
SHEET NO.: 1 OF 2
SIZE: A3

THIS DRAWING CONTAINS INFORMATION THAT IS PROPRIETARY TO MOLEX INCORPORATED AND SHOULD NOT BE USED WITHOUT WRITTEN PERMISSION

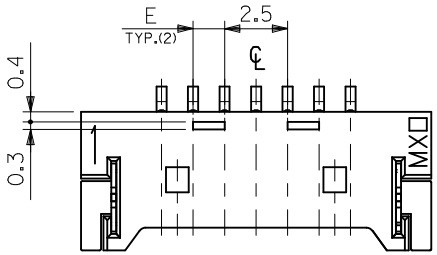

7～19極の奇数極に適用

APPLY FOR ODD CIRCUITS OF 7～19

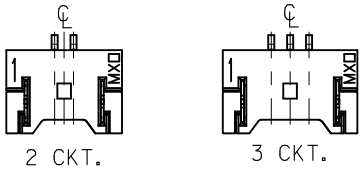

ロック形状図

LOCK CONFIGURATION

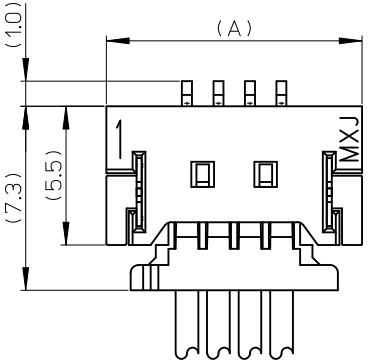

嵌合図(SCALE 5:1)

MATED CONNECTORS (SCALE 5:1)

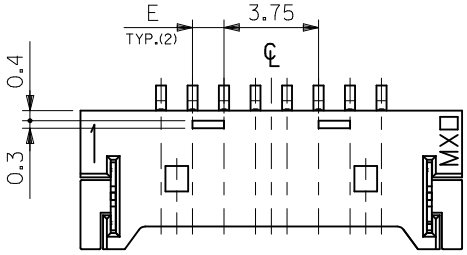

8~30 極の偶数極に適用

APPLY FOR EVEN CIRCUITS OF 8~30

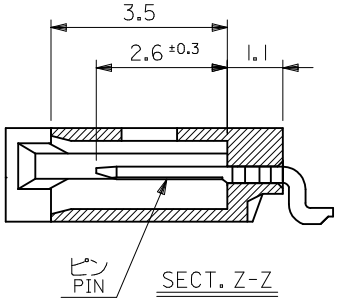

CONNECTOR SERIES NO. 53780-**19

REVISED EC NO: J2010-1927 DRWN:SKUROSE 2010/03/25 CH'KD:KASAKAWA 2010/03/26 APPR:NUKITA 2010/03/29	DESCRIPTION	REV	
GENERAL TOLERANCES (UNLESS SPECIFIED)			
10 UNDER	±0.2		
10 OVER 30 UNDER	±0.25		
30 OVER	±0.3		
ANGULAR ±3 °			
DRAFT WHERE APPLICABLE MUST REMAIN WITHIN DIMENSIONS			

DIMENSION STYLE: MM ONLY	SCALE: ---	DESIGN UNITS: METRIC	THIRD ANGLE PROJECTION
DRAWN BY: T.UENO	DATE: '04/04/15	TITLE: 1.25 W/B CONN WAFER ASSY FOR SMT	
CHECKED BY: M.SASAO	DATE: '04/04/15		
APPROVED BY: M.SASAO	DATE: '04/04/15	molex MOLEX INCORPORATED	
MATERIAL NO.: SEE CHART		DOCUMENT NO.: SD-53780-003	SHEET NO.: 2 OF 2
SIZE: A3	THIS DRAWING CONTAINS INFORMATION THAT IS PROPRIETARY TO MOLEX INCORPORATED AND SHOULD NOT BE USED WITHOUT WRITTEN PERMISSION		

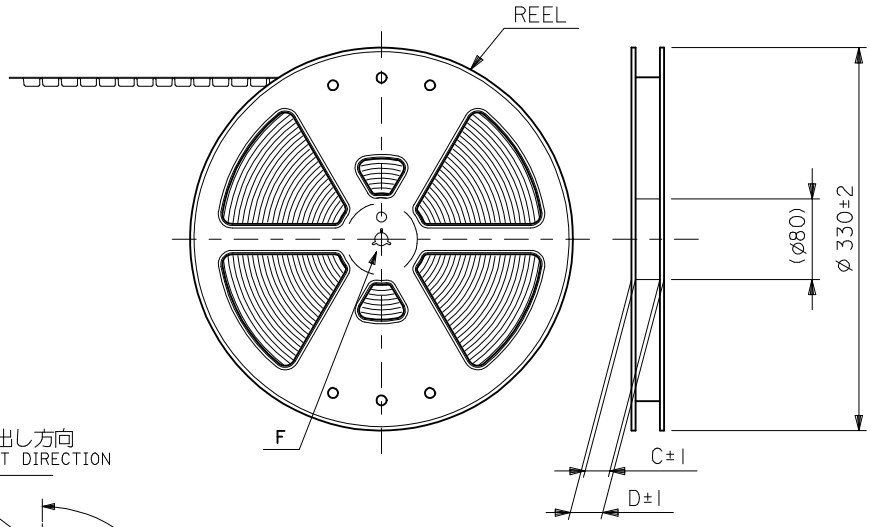

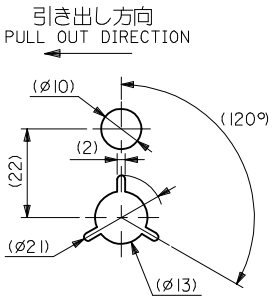

DETAIL F

NOTES

1. 梱包数量：１５００個／リール
   NUMBER OF CONNECTORS : 1500PCS/REEL
2. リードテープ長さ LEAD TAPE LENGTH

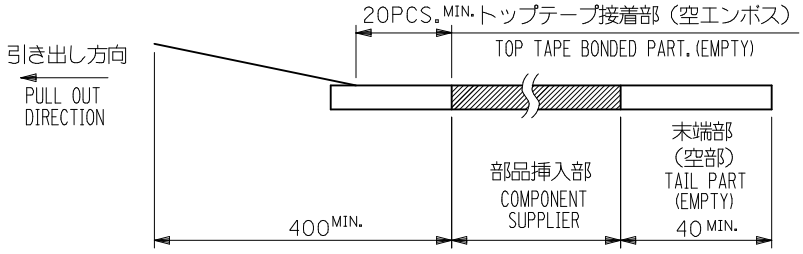

3. トップテープの剥離強度： 0.1N ～ 1.3N(10gf ～ 130gf)
   （剥離方向は下図参照）
   尚、本規格値は出荷時に適用。（但し、輸送時に剥離が発生しないこと。）
   PEELING OFF FORCE OF TOP TAPE : 0.1N ～ 1.3N(10gf ～ 130gf)
   (PEELING DIRECTION AS SHOWN IN FOLLOWING FIG.)
   THIS REQUIREMENT SHOULD BE APPLIED AT SHIPMENT.
   PEEL OFF SHOULD NOT BE ALLOWED , DURING TRANSPORTATION.

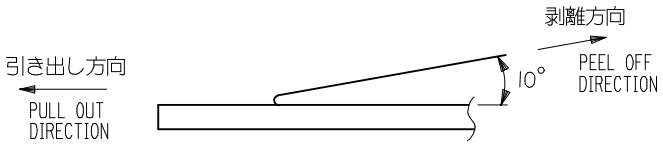

4. 材料(MATERIAL)
   キャリアテープ(CARRIER TAPE)：ポリプロピレン(POLYPROPYLENE)
   トップテープ(TOPTAPE)：PET ，PE ，PEF
   リール(REEL)：ポリスチレン（ＰＳ）<リサイクル材を含む>
   POLYSTYRENE(PS) <RECYCLE MATERIAL CONTAINED>
5. 本製品は ５３７８０-＊＊９０/-＊＊８０ の鉛フリー品である。
   THIS PRODUCT IS LEAD FREE OF 53780-**90/-**80.
6. ELV及びRoHS適合品
   ELV & RoHS COMPLIANT

REVISED	EC NO: J2010-0021	DRWN:MTAKASAKI	2009/07/07
		CH'KD:MHAYASHI	2009/07/08
		APPR:NUKITA	2009/07/08
REV: B	DESCRIPTION		

GENERAL TOLERANCES (UNLESS SPECIFIED)

10 UNDER	±0.2
10 OVER 30 UNDER	±0.25
30 OVER	±0.3
ANGULAR ±3 °	

DRAFT WHERE APPLICABLE MUST REMAIN WITHIN DIMENSIONS

MODEL NO.	53780-**70		
DIMENSION STYLE: MM ONLY	SCALE: ---	DESIGN UNITS: METRIC	THIRD ANGLE PROJECTION
DRAWN BY: T.UENO	DATE: '04/04/15	TITLE: 1.25 W/B WAFER ASSY EMBOSSED TAPE PACKAGE	
CHECKED BY: M.SASAO	DATE: '04/04/15		
APPROVED BY: M.SASAO	DATE: '04/04/15	MOLEX INCORPORATED	
MATERIAL NO.: SEE CHART		DOCUMENT NO.: SD-53780-004	SHEET NO.: 1 OF 3
SIZE: A3	THIS DRAWING CONTAINS INFORMATION THAT IS PROPRIETARY TO MOLEX INCORPORATED AND SHOULD NOT BE USED WITHOUT WRITTEN PERMISSION		

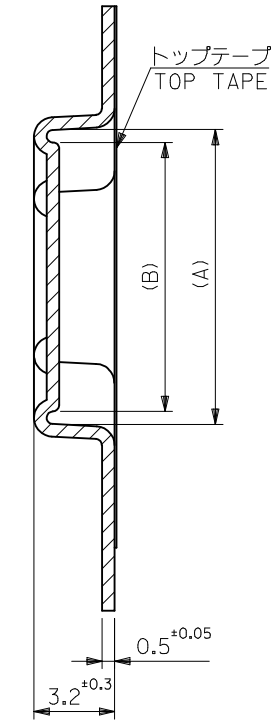

SECT:Y-Y
(SCALE 5:1)

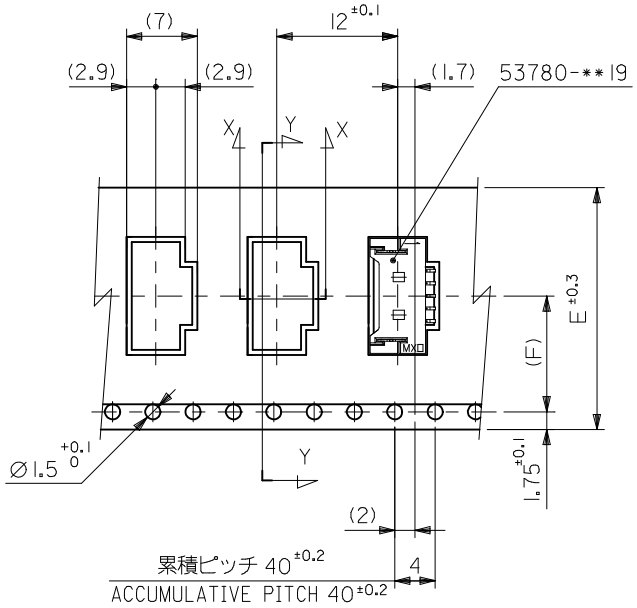

引き出し方向
PULL OUT DIRECTION

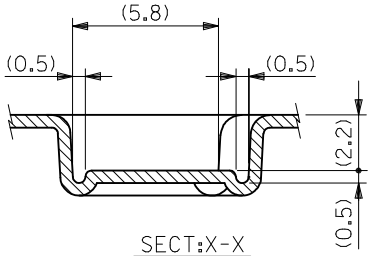

SECT:X-X
(SCALE 5:1)

(F)	E キャリアテープ幅 CARRIER TAPE WIDTH	D	C	(B)	(A)	MATERIAL NO.	極数 CKT.
11.5	24	29.4	25.4	11.75	16.7	53780-0970	9
				10.5	15.45	53780-0870	8
				9.25	14.2	53780-0770	7
				8	12.95	53780-0670	6
				6.75	11.7	53780-0570	5
				5.5	10.45	53780-0470	4
7.5	16	21.4	17.4	4.25	9.2	53780-0370	3
				3	7.95	53780-0270	2
				MODEL NO.		53780-**70	

REVISED
EC NO: J2010-0021
DRWN:MTAKASAKI 2009/07/07
CH'KD:MHAYASHI 2009/07/08
APPR:NUKITA 2009/07/08
DESCRIPTION
B
REV

GENERAL TOLERANCES (UNLESS SPECIFIED)

10 UNDER	±0.2
10 OVER 30 UNDER	±0.25
30 OVER	±0.3
ANGULAR ±3 °	

DRAFT WHERE APPLICABLE MUST REMAIN WITHIN DIMENSIONS

DIMENSION STYLE: MM ONLY
SCALE: ---
DESIGN UNITS: METRIC
THIRD ANGLE PROJECTION

DRAWN BY: T.UENO DATE: '04/04/15
CHECKED BY: M.SASAO DATE: '04/04/15
APPROVED BY: M.SASAO DATE: '04/04/15

TITLE: 1.25 W/B WAFER ASSY EMBOSSED TAPE PACKAGE

molex MOLEX INCORPORATED

MATERIAL NO.: SEE CHART
DOCUMENT NO.: SD-53780-004
SHEET NO.: 2 OF 3
SIZE: A3

THIS DRAWING CONTAINS INFORMATION THAT IS PROPRIETARY TO MOLEX INCORPORATED AND SHOULD NOT BE USED WITHOUT WRITTEN PERMISSION

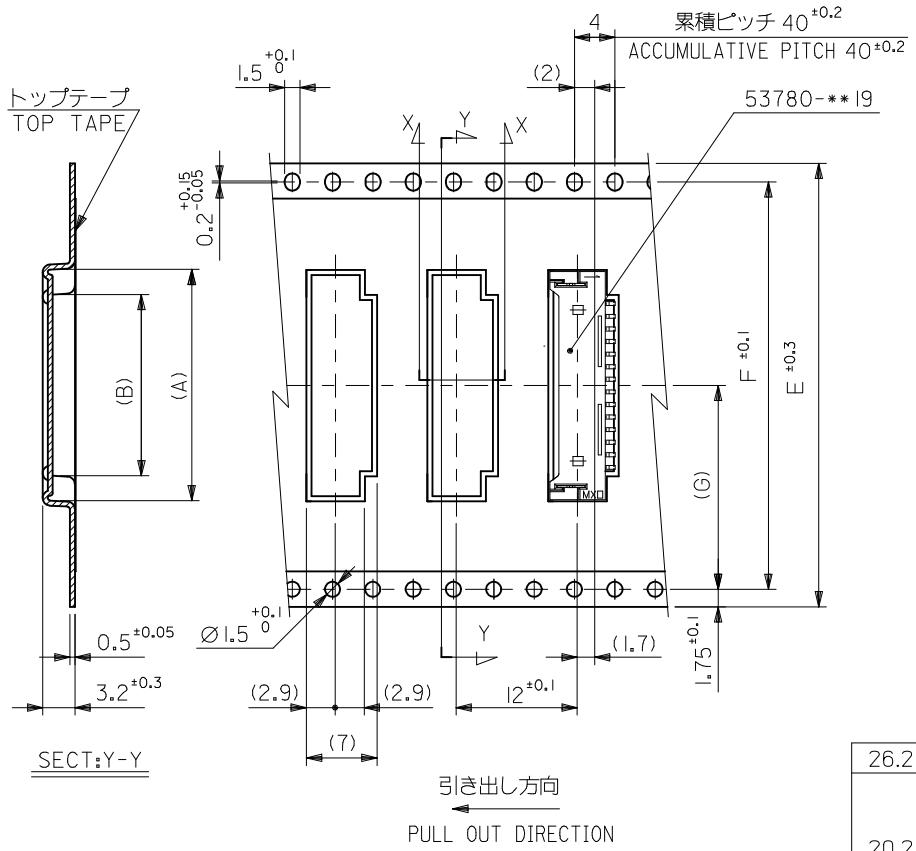

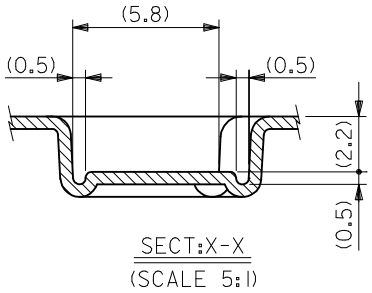

26.2	52.4	56	61.4	57.4	38	42.95	53780-3070	30
20.2	40.4	44	49.4	45.4	25.5	30.45	53780-2070	20
					25.5	27.95	53780-1870	18
					19.25	24.2	53780-1570	15
					18	22.95	53780-1470	14
					15.5	20.45	53780-1270	12
14.2	28.4	32	37.4	33.4	13	17.95	53780-1070	10
(G)	F	E キャリアテープ幅 CARRIER TAPE WIDTH	D	C	(B)	(A)	MATERIAL NO.	極数 CKT.

MODEL NO. 53780-**70

REVISED			
EC NO: J2010-0021	DRWN:MTAKASAKI	CH'KD:MHAYASHI	APPR:NUKITA
2009/07/07	2009/07/08	2009/07/08	
B			

DESCRIPTION

REV

GENERAL TOLERANCES (UNLESS SPECIFIED)

10 UNDER	±0.2
10 OVER 30 UNDER	±0.25
30 OVER	±0.3
ANGULAR ±3 °	

DRAFT WHERE APPLICABLE MUST REMAIN WITHIN DIMENSIONS

DIMENSION STYLE: MM ONLY	SCALE: ---	DESIGN UNITS: METRIC	THIRD ANGLE PROJECTION
DRAWN BY: T.UENO	DATE: '04/04/15	TITLE: 1.25 W/B WAFER ASSY EMBOSSED TAPE PACKAGE	
CHECKED BY: M.SASAO	DATE: '04/04/15		
APPROVED BY: M.SASAO	DATE: '04/04/15	MOLEX INCORPORATED	
MATERIAL NO.: SEE CHART		DOCUMENT NO.: SD-53780-004	SHEET NO.: 3 OF 3
SIZE: A3			

THIS DRAWING CONTAINS INFORMATION THAT IS PROPRIETARY TO MOLEX INCORPORATED AND SHOULD NOT BE USED WITHOUT WRITTEN PERMISSION