# Complete, Quad, 12-/14-/16-Bit, Serial Input, Unipolar/Bipolar Voltage Output DACs

# AD5724/AD5734/AD5754

## FEATURES

**Complete, quad, 12-/14-/16-bit digital-to-analog converter (DAC)**
**Operates from single/dual supplies**
**Software programmable output range**
**+5 V, +10 V, +10.8 V, ±5 V, ±10 V, ±10.8 V**
**INL error: ±16 LSB maximum, DNL error: ±1 LSB maximum**
**Total unadjusted error (TUE): 0.1% FSR maximum**
**Settling time: 10 µs typical**
**Integrated reference buffers**
**Output control during power-up/brownout**
**Simultaneous updating via $\overline{\text{LDAC}}$**
**Asynchronous $\overline{\text{CLR}}$ to zero scale or midscale**
**DSP-/microcontroller-compatible serial interface**
**24-lead TSSOP**
**Operating temperature range: −40°C to +85°C**
***i*CMOS process technology[1]**

## APPLICATIONS

**Industrial automation**
**Closed-loop servo control, process control**
**Automotive test and measurement**
**Programmable logic controllers**

## GENERAL DESCRIPTION

The AD5724/AD5734/AD5754 are quad, 12-/14-/16-bit, serial input, voltage output digital-to-analog converters. They operate from single-supply voltages from +4.5 V up to +16.5 V or dual-supply voltages from ±4.5 V up to ±16.5 V. Nominal full-scale output range is software-selectable from +5 V, +10 V, +10.8 V, ±5 V, ±10 V, or ±10.8 V. Integrated output amplifiers, reference buffers, and proprietary power-up/power-down control circuitry are also provided.

The parts offer guaranteed monotonicity, integral nonlinearity (INL) of ±16 LSB maximum, low noise, and 10 µs maximum settling time.

The AD5724/AD5734/AD5754 use a serial interface that operates at clock rates up to 30 MHz and are compatible with DSP and microcontroller interface standards. Double buffering allows the simultaneous updating of all DACs. The input coding is user-selectable twos complement or offset binary for a bipolar output (depending on the state of Pin BIN/$\overline{\text{2sComp}}$), and straight binary for a unipolar output. The asynchronous clear function clears all DAC registers to a user-selectable zero-scale or midscale output. The parts are available in a 24-lead TSSOP and offer guaranteed specifications over the −40°C to +85°C industrial temperature range.

## FUNCTIONAL BLOCK DIAGRAM

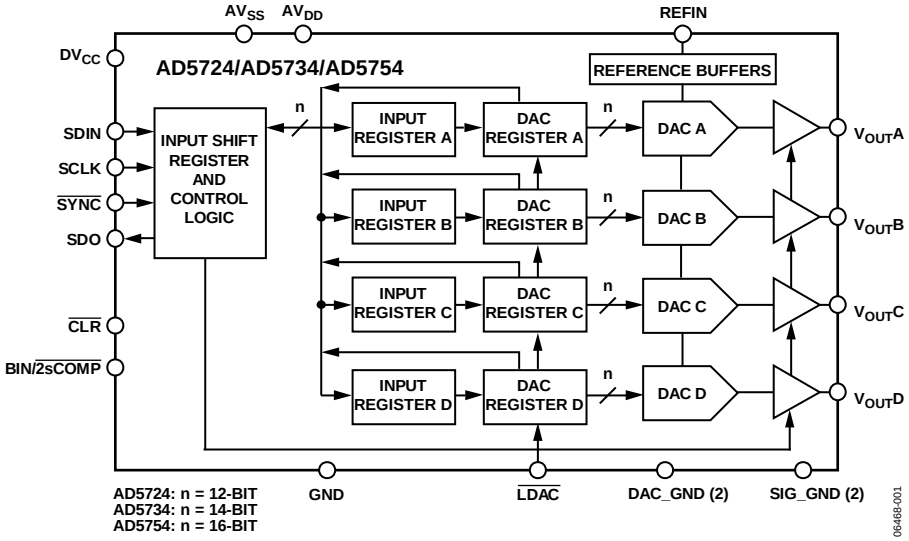


*Figure 1.*

[1] For analog systems designers within industrial/instrumentation equipment OEMs who need high performance ICs at higher-voltage levels, *i*CMOS® is a technology platform that enables the development of analog ICs capable of 30 V and operating at ±15 V supplies while allowing dramatic reductions in power consumption and package size, as well as increased ac and dc performance.

**Rev. D**
**Information furnished by Analog Devices is believed to be accurate and reliable. However, no responsibility is assumed by Analog Devices for its use, nor for any infringements of patents or other rights of third parties that may result from its use. Specifications subject to change without notice. No license is granted by implication or otherwise under any patent or patent rights of Analog Devices. Trademarks and registered trademarks are the property of their respective owners.**

**One Technology Way, P.O. Box 9106, Norwood, MA 02062-9106, U.S.A.**
**Tel: 781.329.4700** **www.analog.com**
**Fax: 781.461.3113** **©2008–2011 Analog Devices, Inc. All rights reserved.**

# TABLE OF CONTENTS

Features ... 1
Applications ... 1
General Description ... 1
Functional Block Diagram ... 1
Revision History ... 2
Specifications ... 3
AC Performance Characteristics ... 5
Timing Characteristics ... 5
Timing Diagrams ... 6
Absolute Maximum Ratings ... 8
ESD Caution ... 8
Pin Configuration and Function Descriptions ... 9
Typical Performance Characteristics ... 10
Terminology ... 16
Theory of Operation ... 18
Architecture ... 18
Serial Interface ... 18
Load DAC ($\overline{\text{LDAC}}$) ... 20
Asynchronous Clear ($\overline{\text{CLR}}$) ... 20
Configuring the AD5724/AD5734/AD5754 ... 20
Transfer Function ... 20
Input Shift Register ... 24
DAC Register ... 24
Output Range Select Register ... 25
Control Register ... 25
Power Control Register ... 26
Features ... 27
Analog Output Control ... 27
Power-Down Mode ... 27
Overcurrent Protection ... 27
Thermal Shutdown ... 27
Applications Information ... 28
+5 V/±5 V Operation ... 28
Layout Guidelines ... 28
Galvanically Isolated Interface ... 28
Voltage Reference Selection ... 28
Microprocessor Interfacing ... 29
Outline Dimensions ... 30
Ordering Guide ... 30

## REVISION HISTORY

**7/11—Rev. C to Rev. D**
Changes to Table 3: t7, t8, t10 Limits ... 5

**3/11—Rev. B to Rev. C**
Changes to Configuring the AD5724/AD5734/AD5754 Section ... 20

**8/10—Rev. A to Rev. B**
Changes to Table 27 ... 26

**4/10—Rev. 0 to Rev. A**
Changes to Junction Temperature, $T_J$ max Parameter, Table 4 .. 8
Changes to Exposed Pad Description, Table 5 ... 9
Added Exposed Paddle Notation to Outline Dimensions ... 30

**8/08—Revision 0: Initial Version**

# SPECIFICATIONS

$AV_{DD}$ = 4.5 V[1] to 16.5 V; $AV_{SS}$ = −4.5 V[1] to −16.5 V, or 0 V; GND = 0 V; REFIN= 2.5 V; $DV_{CC}$ = 2.7 V to 5.5 V; $R_{LOAD}$ = 2 kΩ; $C_{LOAD}$ = 200 pF; all specifications $T_{MIN}$ to $T_{MAX}$.

**Table 1.**

| Parameter | Min | Typ | Max | Unit | Test Conditions/Comments |
|---|---|---|---|---|---|
| ACCURACY | | | | | Outputs unloaded |
| Resolution | | | | | |
| AD5754 | 16 | | | Bits | |
| AD5734 | 14 | | | Bits | |
| AD5724 | 12 | | | Bits | |
| Total Unadjusted Error (TUE) | | | | | |
| A Version | −0.3 | | +0.3 | % FSR | |
| B Version | −0.1 | | +0.1 | % FSR | |
| Relative Accuracy (INL)[2] | | | | | |
| AD5754 | −16 | | +16 | LSB | |
| AD5734 | −4 | | +4 | LSB | |
| AD5724 | −1 | | +1 | LSB | |
| Differential Nonlinearity (DNL) | −1 | | +1 | LSB | All models, all versions, guaranteed monotonic |
| Bipolar Zero Error | −6 | | +6 | mV | $T_A$ = 25°C, error at other temperatures obtained using bipolar zero error TC |
| Bipolar Zero Error TC[3] | | ±4 | | ppm FSR/°C | |
| Zero-Scale Error | −6 | | 6 | mV | $T_A$ = 25°C, error at other temperatures obtained using zero-scale error TC |
| Zero-Scale Error TC[3] | | ±4 | | ppm FSR/°C | |
| Offset Error | −6 | | +6 | mV | $T_A$ = 25°C, error at other temperatures obtained using offset error TC |
| Offset Error TC[3] | | ±4 | | ppm FSR/°C | |
| Gain Error | −0.025 | | +0.025 | % FSR | ±10 V range, $T_A$ = 25°C, error at other temperatures obtained using gain error TC |
| Gain Error[3] | −0.065 | | 0 | % FSR | +10 V and +5 V ranges, $T_A$ = 25°C, error at other temperatures obtained using gain error TC |
| Gain Error[3] | 0 | | +0.08 | % FSR | ±5 V range, $T_A$ = 25°C, error at other temperatures obtained using gain error TC |
| Gain Error TC[3] | | ±8 | | ppm FSR/°C | |
| DC Crosstalk[3] | | | 120 | µV | |
| REFERENCE INPUT[3] | | | | | |
| Reference Input Voltage | | 2.5 | | V | ±1% for specified performance |
| DC Input Impedance | 1 | 5 | | MΩ | |
| Input Current | −2 | ±0.5 | +2 | µA | |
| Reference Range | 2 | | 3 | V | |
| OUTPUT CHARACTERISTICS[3] | | | | | |
| Output Voltage Range | −10.8 | | +10.8 | V | $AV_{DD}/AV_{SS}$ = ±11.7 V min, REFIN = +2.5 V |
| | −12 | | +12 | V | $AV_{DD}/AV_{SS}$ = ±12.9 V min, REFIN = +3 V |
| Headroom Required | | 0.5 | 0.9 | V | |
| Output Voltage TC | | ±4 | | ppm FSR/°C | |
| Short-Circuit Current | | 20 | | mA | |
| Load | 2 | | | kΩ | For specified performance |
| Capacitive Load Stability | | | 4000 | pF | |
| DC Output Impedance | | 0.5 | | Ω | |

| Parameter | Min | Typ | Max | Unit | Test Conditions/Comments |
|---|---|---|---|---|---|
| DIGITAL INPUTS[3] | | | | | $DV_{CC}$ = 2.7 V to 5.5 V, JEDEC compliant |
| Input High Voltage, $V_{IH}$ | 2 | | | V | |
| Input Low Voltage, $V_{IL}$ | | | 0.8 | V | |
| Input Current | | | ±1 | µA | Per pin |
| Pin Capacitance | | 5 | | pF | Per pin |
| DIGITAL OUTPUTS (SDO)[3] | | | | | |
| Output Low Voltage, $V_{OL}$ | | | 0.4 | V | $DV_{CC}$ = 5 V ± 10%, sinking 200 µA |
| Output High Voltage, $V_{OH}$ | $DV_{CC}$ − 1 | | | V | $DV_{CC}$ = 5 V ± 10%, sourcing 200 µA |
| Output Low Voltage, $V_{OL}$ | | | 0.4 | V | $DV_{CC}$ = 2.7 V to 3.6 V, sinking 200 µA |
| Output High Voltage, $V_{OH}$ | $DV_{CC}$ − 0.5 | | | V | $DV_{CC}$ = 2.7 V to 3.6 V, sourcing 200 µA |
| High Impedance Leakage Current | −1 | | +1 | µA | |
| High Impedance Output Capacitance | | 5 | | pF | |
| POWER REQUIREMENTS | | | | | |
| $AV_{DD}$ | 4.5 | | 16.5 | V | |
| $AV_{SS}$ | −4.5 | | −16.5 | V | |
| $DV_{CC}$ | 2.7 | | 5.5 | V | |
| Power Supply Sensitivity[3] | | | | | |
| $\Delta V_{OUT}/\Delta AV_{DD}$ | | −65 | | dB | |
| $AI_{DD}$ | | | 2.5 | mA/channel | Outputs unloaded |
| | | | 1.75 | mA/channel | $AV_{SS}$ = 0 V, outputs unloaded |
| $AI_{SS}$ | | | 2.2 | mA/channel | Outputs unloaded |
| $DI_{CC}$ | | 0.5 | 3 | µA | $V_{IH} = DV_{CC}$, $V_{IL}$ = GND |
| Power Dissipation | | 310 | | mW | ±16.5 V operation, outputs unloaded |
| | | 115 | | mW | 16.5 V operation, $AV_{SS}$ = 0 V, outputs unloaded |
| Power-Down Currents | | | | | |
| $AI_{DD}$ | | 40 | | µA | |
| $AI_{SS}$ | | 40 | | µA | |
| $DI_{CC}$ | | 300 | | nA | |

[1] For specified performance, maximum headroom requirement is 0.9 V.
[2] INL is measured from Code 512, Code 128, and Code 32 for the AD5754, the AD5734, and the AD5724, respectively.
[3] Guaranteed by characterization; not production tested.

## AC PERFORMANCE CHARACTERISTICS

$AV_{DD}$ = 4.5 V[1] to 16.5 V; $AV_{SS}$ = −4.5 V[1] to −16.5 V, or 0 V; GND = 0 V; REFIN= 2.5 V; $DV_{CC}$ = 2.7 V to 5.5 V; $R_{LOAD}$ = 2 kΩ; $C_{LOAD}$ = 200 pF; all specifications $T_{MIN}$ to $T_{MAX}$.

**Table 2.**

| Parameter[2] | A, B Version Min | Typ | Max | Unit | Test Conditions/Comments |
|---|---|---|---|---|---|
| DYNAMIC PERFORMANCE | | | | | |
| Output Voltage Settling Time | | 10 | 12 | µs | 20 V step to ±0.03% FSR |
| | | 7.5 | 8.5 | µs | 10 V step to ±0.03% FSR |
| | | | 5 | µs | 512 LSB step settling (16-bit resolution) |
| Slew Rate | | 3.5 | | V/µs | |
| Digital-to-Analog Glitch Energy | | 13 | | nV-sec | |
| Glitch Impulse Peak Amplitude | | 35 | | mV | |
| Digital Crosstalk | | 10 | | nV-sec | |
| DAC-to-DAC Crosstalk | | 10 | | nV-sec | |
| Digital Feedthrough | | 0.6 | | nV-sec | |
| Output Noise | | | | | |
| 0.1 Hz to 10 Hz Bandwidth) | | 15 | | µV p-p | 0x8000 DAC code |
| 100 kHz Bandwidth | | 80 | | µV rms | |
| Output Noise Spectral Density | | 320 | | nV/√Hz | Measured at 10 kHz, 0x8000 DAC code |

[1] For specified performance, maximum headroom requirement is 0.9 V.
[2] Guaranteed by design and characterization. Not production tested.

## TIMING CHARACTERISTICS

$AV_{DD}$ = 4.5 V to 16.5 V; $AV_{SS}$ = −4.5 V to −16.5 V, or 0 V; GND = 0 V; REFIN = 2.5 V; $DV_{CC}$ = 2.7 V to 5.5 V; $R_{LOAD}$ = 2 kΩ; $C_{LOAD}$ = 200 pF; all specifications $T_{MIN}$ to $T_{MAX}$, unless otherwise noted.

**Table 3.**

| Parameter[1, 2, 3] | Limit at $t_{MIN}$, $t_{MAX}$ | Unit | Description |
|---|---|---|---|
| $t_1$ | 33 | ns min | SCLK cycle time |
| $t_2$ | 13 | ns min | SCLK high time |
| $t_3$ | 13 | ns min | SCLK low time |
| $t_4$ | 13 | ns min | $\overline{SYNC}$ falling edge to SCLK falling edge setup time |
| $t_5$ | 13 | ns min | SCLK falling edge to $\overline{SYNC}$ rising edge |
| $t_6$ | 100 | ns min | Minimum $\overline{SYNC}$ high time (write mode) |
| $t_7$ | 7 | ns min | Data setup time |
| $t_8$ | 2 | ns min | Data hold time |
| $t_9$ | 20 | ns min | $\overline{LDAC}$ falling edge to $\overline{SYNC}$ falling edge |
| $t_{10}$ | 130 | ns min | $\overline{SYNC}$ rising edge to $\overline{LDAC}$ falling edge |
| $t_{11}$ | 20 | ns min | $\overline{LDAC}$ pulse width low |
| $t_{12}$ | 10 | µs typ | DAC output settling time |
| $t_{13}$ | 20 | ns min | $\overline{CLR}$ pulse width low |
| $t_{14}$ | 2.5 | µs max | $\overline{CLR}$ pulse activation time |
| $t_{15}$[4] | 13 | ns min | $\overline{SYNC}$ rising edge to SCLK rising edge |
| $t_{16}$[4] | 40 | ns max | SCLK rising edge to SDO valid ($C_{L\ SDO}$[5] = 15 pF) |
| $t_{17}$ | 200 | ns min | Minimum $\overline{SYNC}$ high time (readback/daisy-chain mode) |

[1] Guaranteed by characterization; not production tested.
[2] All input signals are specified with $t_R = t_F$ = 5 ns (10% to 90% of $DV_{CC}$) and timed from a voltage level of 1.2 V.
[3] See Figure 2, Figure 3, and Figure 4.
[4] Daisy-chain and readback mode.
[5] $C_{L\ SDO}$ = capacitive load on SDO output.

## TIMING DIAGRAMS

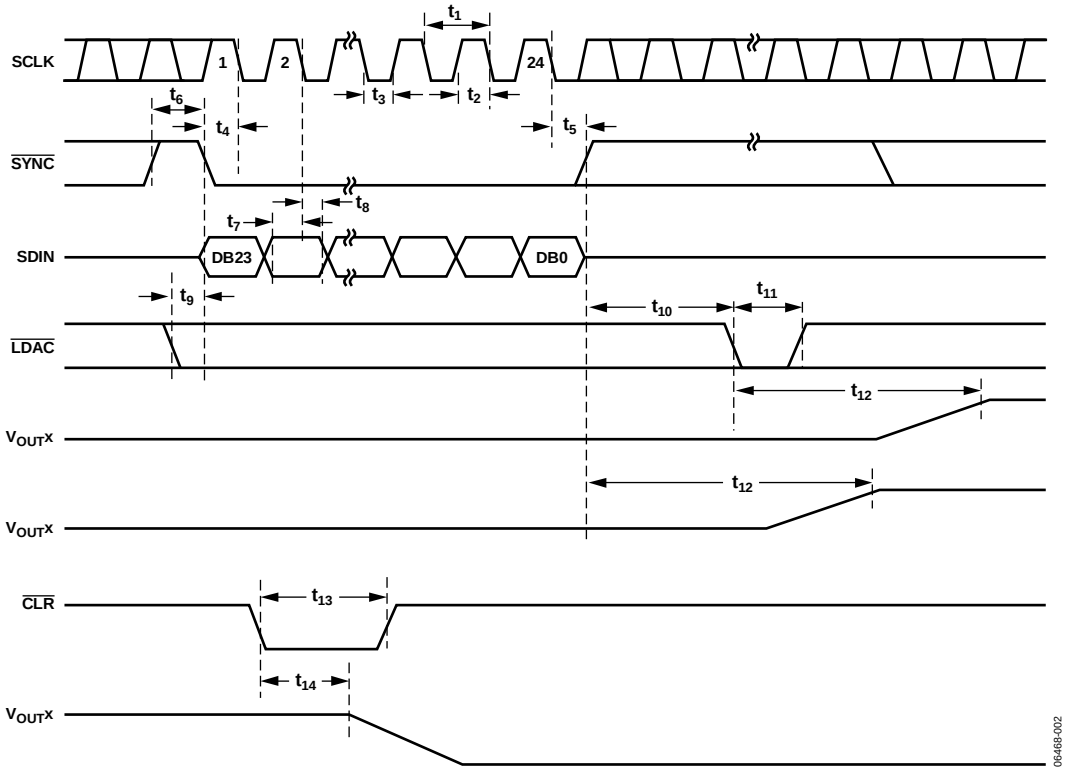


*Figure 2. Serial Interface Timing Diagram*

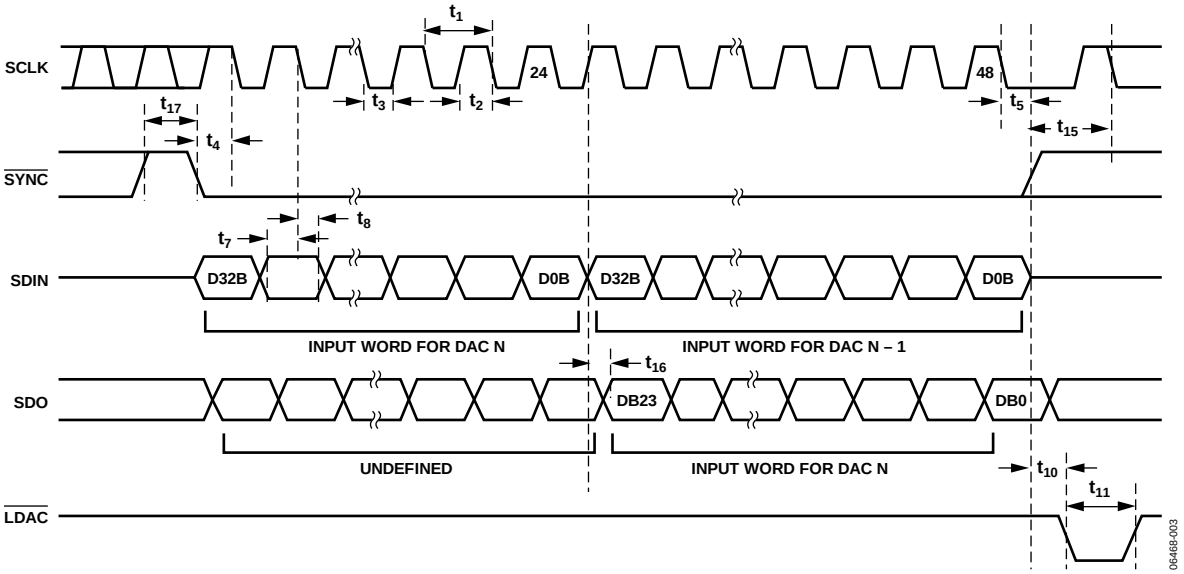


*Figure 3. Daisy-Chain Timing Diagram*

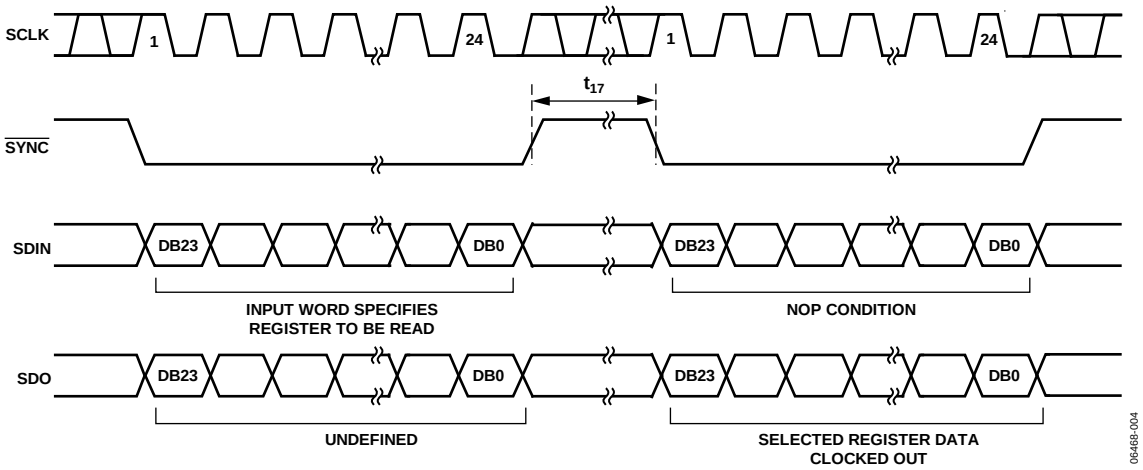


*Figure 4. Readback Timing Diagram*

# ABSOLUTE MAXIMUM RATINGS

$T_A$ = 25°C, unless otherwise noted.
Transient currents of up to 100 mA do not cause SCR latch-up.

**Table 4.**

| Parameter | Rating |
|---|---|
| $AV_{DD}$ to GND | −0.3 V to +17 V |
| $AV_{SS}$ to GND | +0.3 V to −17 V |
| $DV_{CC}$ to GND | −0.3 V to +7 V |
| Digital Inputs to GND | −0.3 V to $DV_{CC}$ + 0.3 V or 7 V (whichever is less) |
| Digital Outputs to GND | −0.3 V to $DV_{CC}$ + 0.3 V or 7 V (whichever is less) |
| REFIN to GND | −0.3 V to +5 V |
| $V_{OUT}A$, $V_{OUT}B$, $V_{OUT}C$, $V_{OUT}D$ to GND | $AV_{SS}$ to $AV_{DD}$ |
| DAC_GND to GND | −0.3 V to +0.3 V |
| SIG_GND to GND | −0.3 V to +0.3 V |
| Operating Temperature Range, $T_A$ | |
| Industrial | −40°C to +85°C |
| Storage Temperature Range | −65°C to +150°C |
| Junction Temperature, $T_J$ max | 150°C |
| 24-Lead TSSOP Package | |
| $\theta_{JA}$ Thermal Impedance | 42°C/W |
| $\theta_{JC}$ Thermal Impedance | 9°C/W |
| Power Dissipation | ($T_J$ max − $T_A$)/ $\theta_{JA}$ |
| Lead Temperature | JEDEC industry standard |
| Soldering | J-STD-020 |
| ESD (Human Body Model) | 3.5 kV |

Stresses above those listed under Absolute Maximum Ratings may cause permanent damage to the device. This is a stress rating only; functional operation of the device at these or any other conditions above those indicated in the operational section of this specification is not implied. Exposure to absolute maximum rating conditions for extended periods may affect device reliability.

## ESD CAUTION

**ESD (electrostatic discharge) sensitive device.** Charged devices and circuit boards can discharge without detection. Although this product features patented or proprietary protection circuitry, damage may occur on devices subjected to high energy ESD. Therefore, proper ESD precautions should be taken to avoid performance degradation or loss of functionality.

# PIN CONFIGURATION AND FUNCTION DESCRIPTIONS

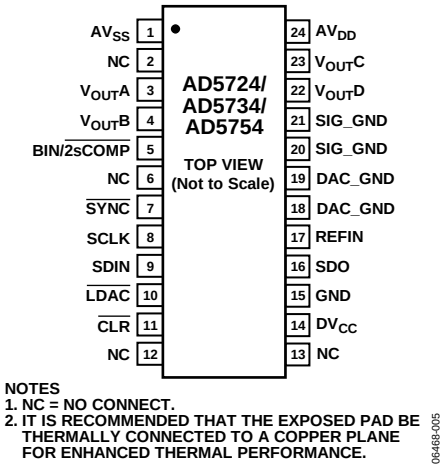


*Figure 5. Pin Configuration*

**Table 5. Pin Function Descriptions**

| Pin No. | Mnemonic | Description |
|---|---|---|
| 1 | $AV_{SS}$ | Negative Analog Supply. Voltage ranges from −4.5 V to −16.5 V. This pin can be connected to 0 V if output ranges are unipolar. |
| 2, 6, 12, 13 | NC | Do not connect to these pins. |
| 3 | $V_{OUT}A$ | Analog Output Voltage of DAC A. The output amplifier is capable of directly driving a 2 kΩ, 4000 pF load. |
| 4 | $V_{OUT}B$ | Analog Output Voltage of DAC B. The output amplifier is capable of directly driving a 2 kΩ, 4000 pF load. |
| 5 | BIN/$\overline{2sCOMP}$ | Determines the DAC coding for a bipolar output range. This pin should be hardwired to either $DV_{CC}$ or GND. When hardwired to $DV_{CC}$, input coding is offset binary. When hardwired to GND, input coding is twos complement. (For unipolar output ranges, coding is always straight binary). |
| 7 | $\overline{SYNC}$ | Active Low Input. This is the frame synchronization signal for the serial interface. While $\overline{SYNC}$ is low, data is transferred on the falling edge of SCLK. Data is latched on the rising edge of $\overline{SYNC}$. |
| 8 | SCLK | Serial Clock Input. Data is clocked into the shift register on the falling edge of SCLK. This operates at clock speeds up to 30 MHz. |
| 9 | SDIN | Serial Data Input. Data must be valid on the falling edge of SCLK. |
| 10 | $\overline{LDAC}$ | Load DAC, Logic Input. This is used to update the DAC registers and consequently, the analog outputs. When this pin is tied permanently low, the addressed DAC register is updated on the rising edge of $\overline{SYNC}$. If $\overline{LDAC}$ is held high during the write cycle, the DAC input register is updated, but the output update is held off until the falling edge of $\overline{LDAC}$. In this mode, all analog outputs can be updated simultaneously on the falling edge of $\overline{LDAC}$. The $\overline{LDAC}$ pin should not be left unconnected. |
| 11 | $\overline{CLR}$ | Active Low Input. Asserting this pin sets the DAC registers to zero-scale code or midscale code (user-selectable). |
| 14 | $DV_{CC}$ | Digital Supply. Voltage ranges from 2.7 V to 5.5 V. |
| 15 | GND | Ground Reference. |
| 16 | SDO | Serial Data Output. Used to clock data from the serial register in daisy-chain or readback mode. Data is clocked out on the rising edge of SCLK and is valid on the falling edge of SCLK. |
| 17 | REFIN | External Reference Voltage Input. Reference input range is 2 V to 3 V. REFIN = 2.5 V for specified performance. |
| 18, 19 | DAC_GND | Ground Reference for the Four Digital-to-Analog Converters. |
| 20, 21 | SIG_GND | Ground Reference for the Four Output Amplifiers. |
| 22 | $V_{OUT}D$ | Analog Output Voltage of DAC D. The output amplifier is capable of directly driving a 2 kΩ, 4000 pF load. |
| 23 | $V_{OUT}C$ | Analog Output Voltage of DAC C. The output amplifier is capable of directly driving a 2 kΩ, 4000 pF load. |
| 24 | $AV_{DD}$ | Positive Analog Supply. Voltage ranges from 4.5 V to 16.5 V. |
| Exposed Paddle | $AV_{SS}$ | This exposed paddle should be connected to the potential of the $AV_{SS}$ pin, or alternatively, it can be left electrically unconnected. It is recommended that the paddle be thermally connected to a copper plane for enhanced thermal performance. |

# TYPICAL PERFORMANCE CHARACTERISTICS

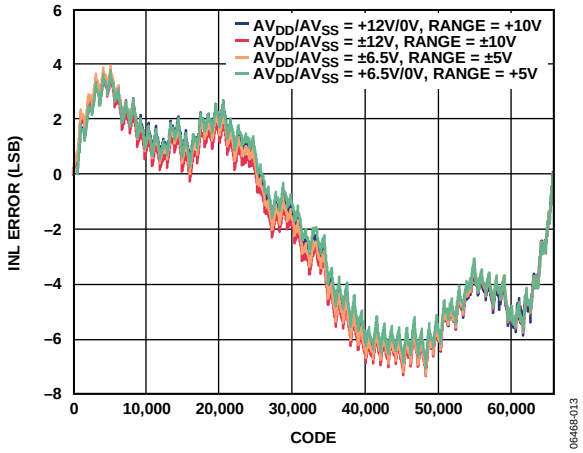


*Figure 6. AD5754 Integral Nonlinearity Error vs. Code*

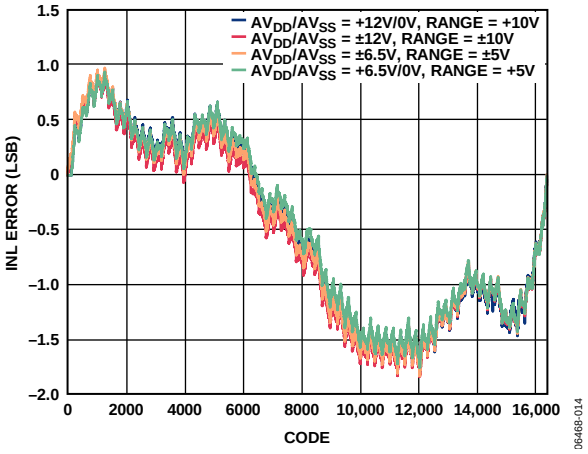


*Figure 7. AD5734 Integral Nonlinearity Error vs. Code*

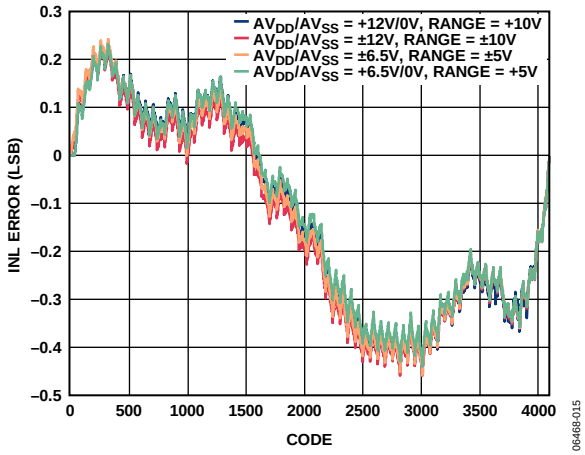


*Figure 8. AD5724 Integral Nonlinearity Error vs. Code*

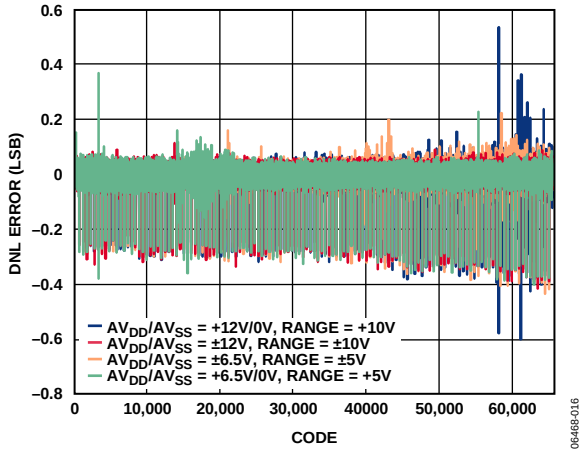


*Figure 9. AD5754 Differential Nonlinearity Error vs. Code*

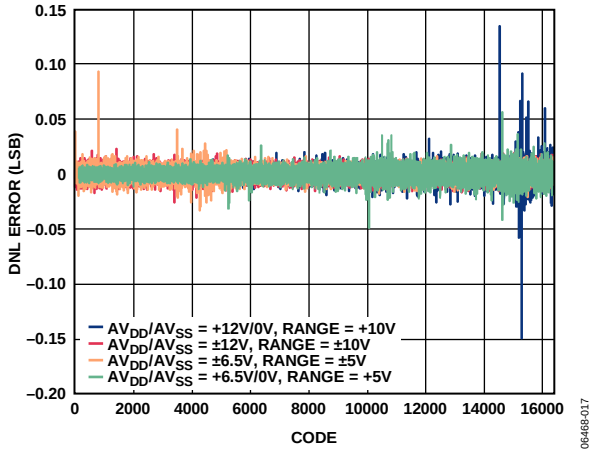


*Figure 10. AD5734 Differential Nonlinearity Error vs. Code*

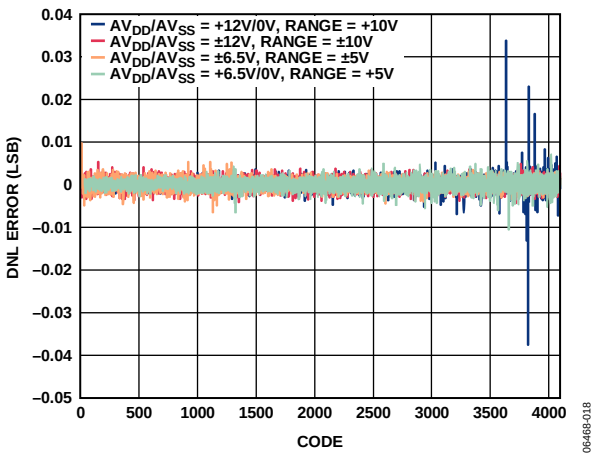


*Figure 11. AD5724 Differential Nonlinearity Error vs. Code*

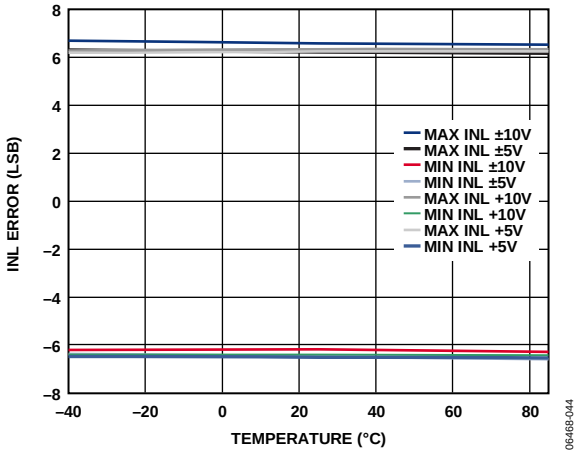


Figure 12. AD5754 Integral Nonlinearity Error vs. Temperature

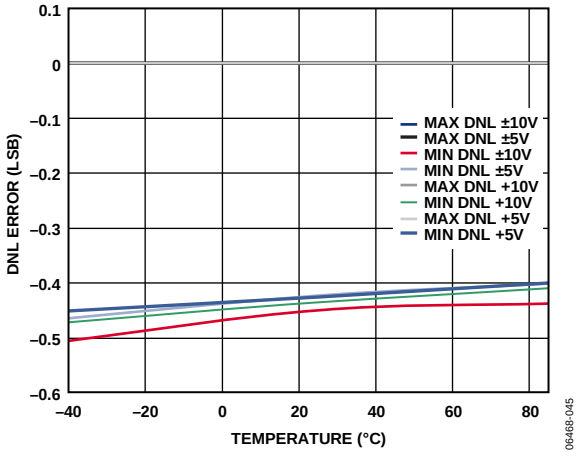


Figure 13. AD5754 Differential Nonlinearity Error vs. Temperature

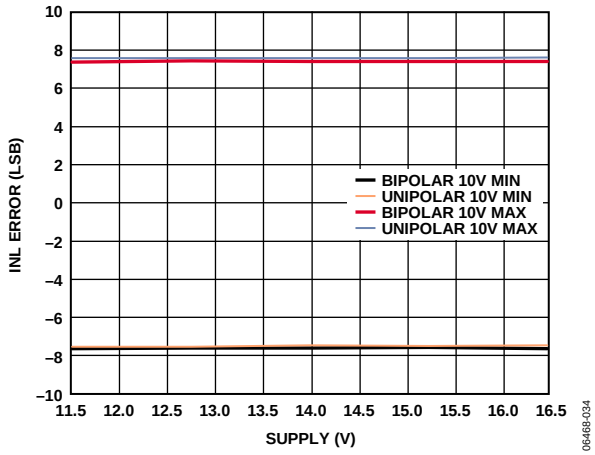


Figure 14. AD5754 Integral Nonlinearity Error vs. Supply Voltage

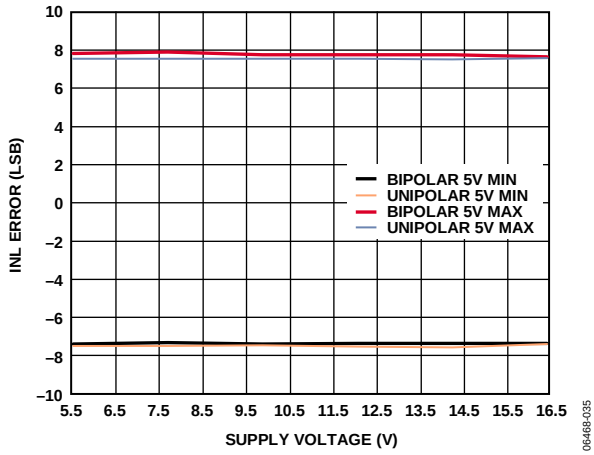


Figure 15. AD5754 Integral Nonlinearity Error vs. Supply Voltage

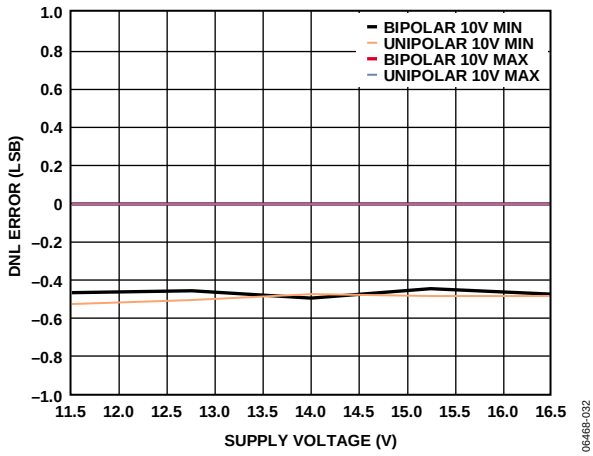


Figure 16. AD5754 Differential Nonlinearity Error vs. Supply Voltage

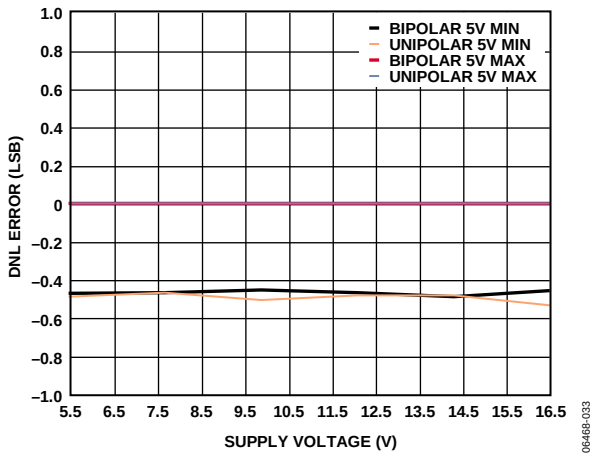


Figure 17. AD5754 Differential Nonlinearity Error vs. Supply Voltage

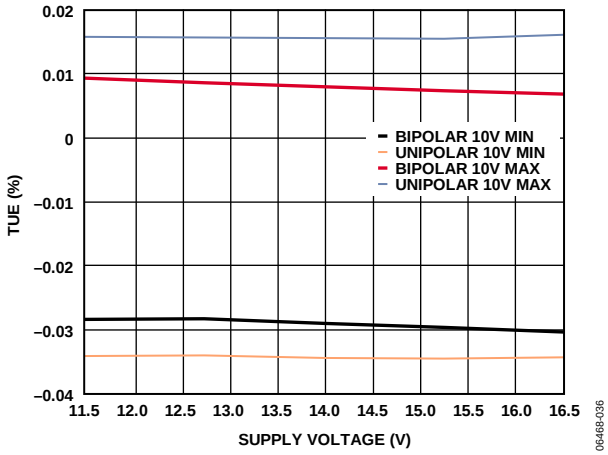


*Figure 18. AD5754 Total Unadjusted Error vs. Supply Voltage*

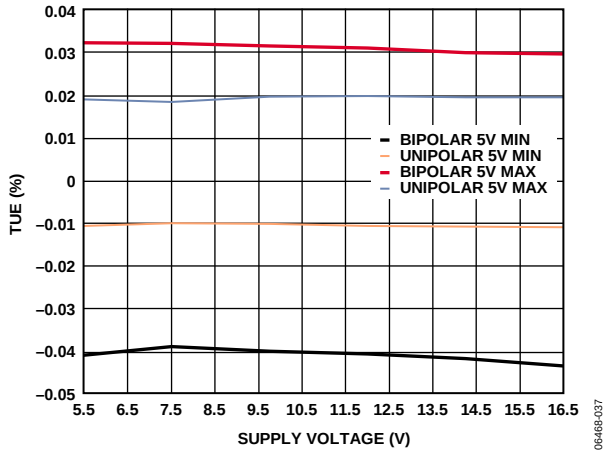


*Figure 19. AD5754 Total Unadjusted Error vs. Supply Voltage*

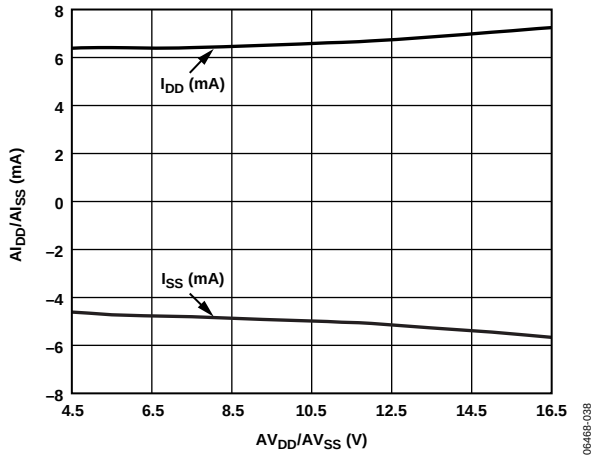


*Figure 20. Supply Current vs. Supply Voltage (Dual Supply)*

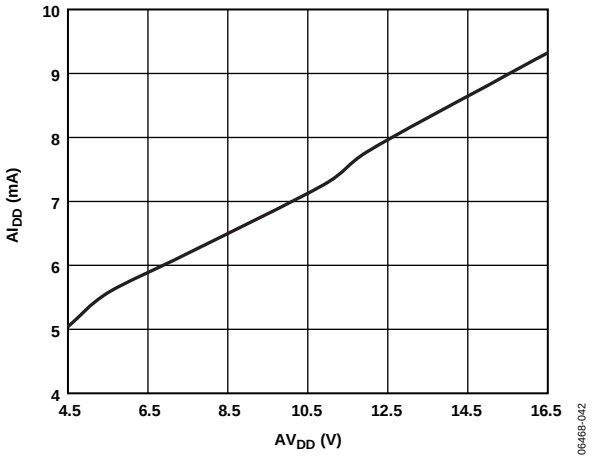


*Figure 21. Supply Current vs. Supply Voltage (Single Supply)*

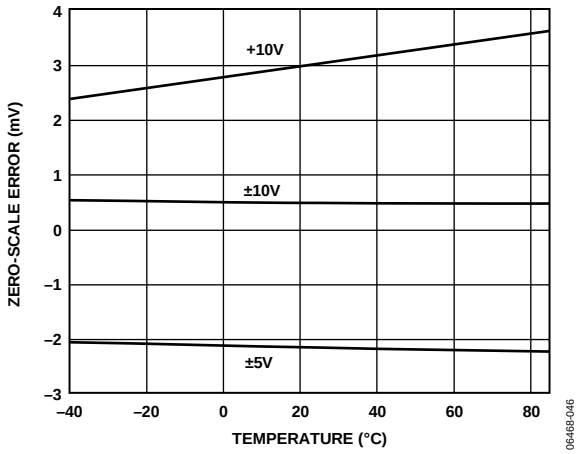


*Figure 22. Zero-Scale Error vs. Temperature*

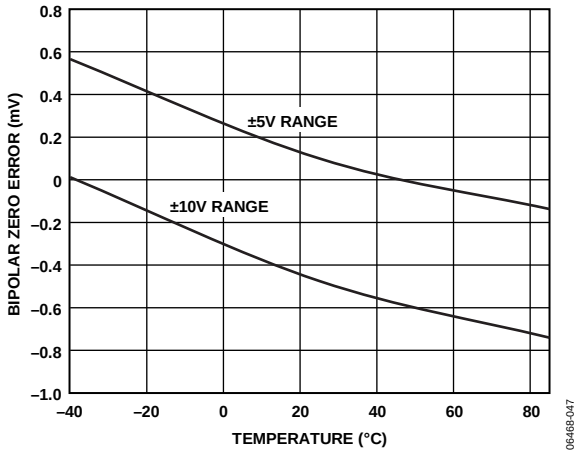


*Figure 23. Bipolar Zero Error vs. Temperature*

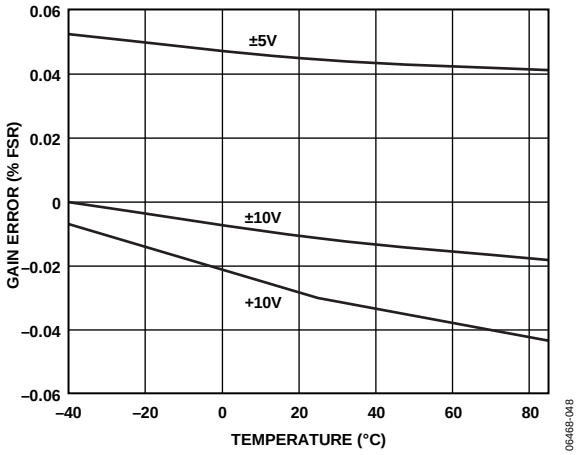


*Figure 24. Gain Error vs. Temperature*

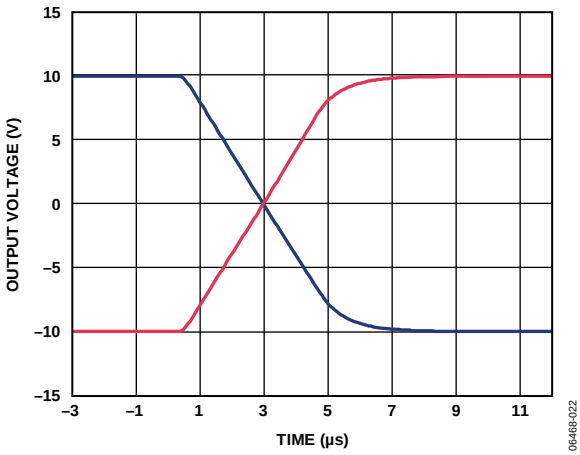


*Figure 27. Full-Scale Settling Time, ±10 V Range*

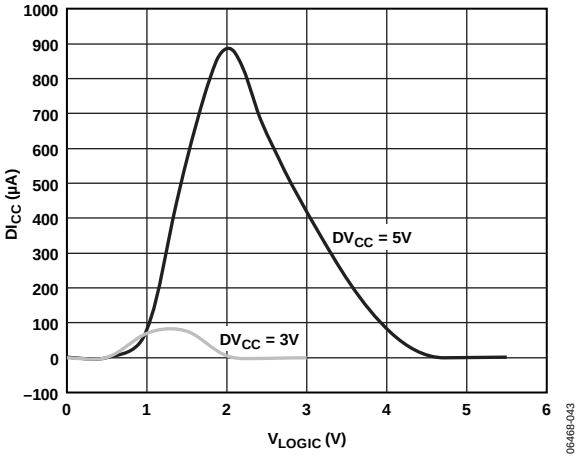


*Figure 25. Digital Current vs. Logic Input Voltage*

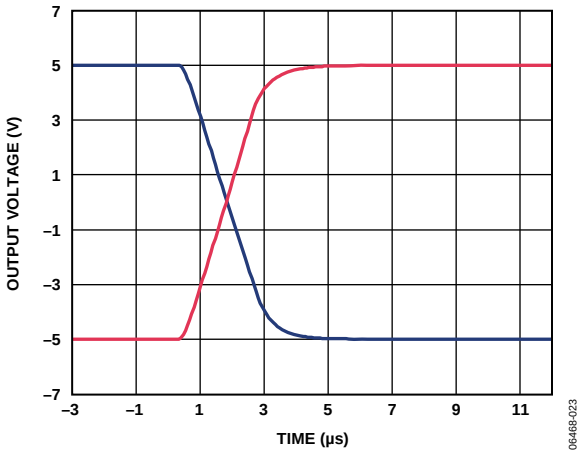


*Figure 28. Full-Scale Settling Time, ±5 V Range*

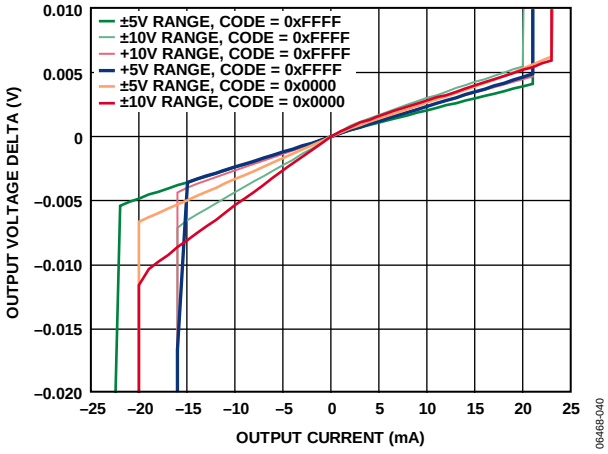


*Figure 26. Output Source and Sink Capability*

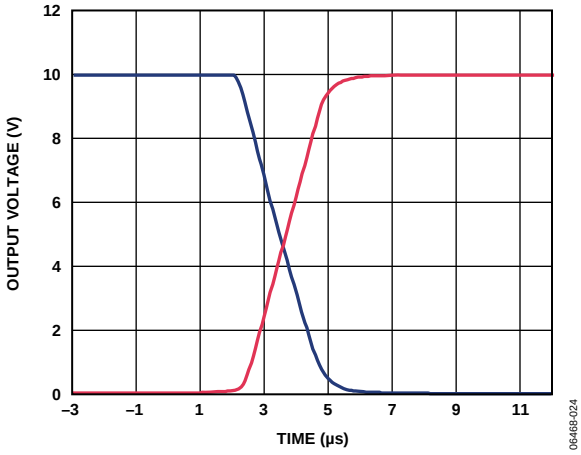


*Figure 29. Full-Scale Settling Time, +10 V Range*

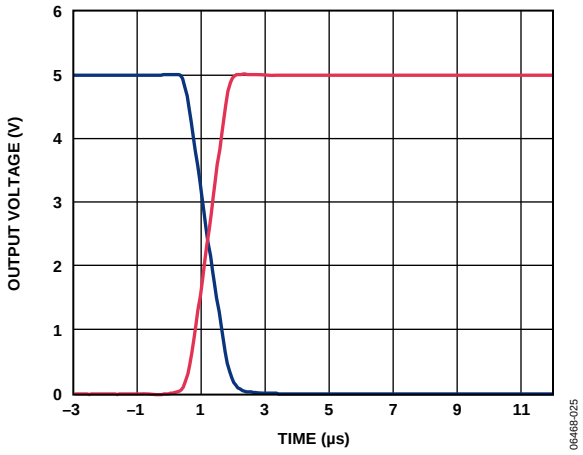


Figure 30. Full-Scale Settling Time, +5 V Range

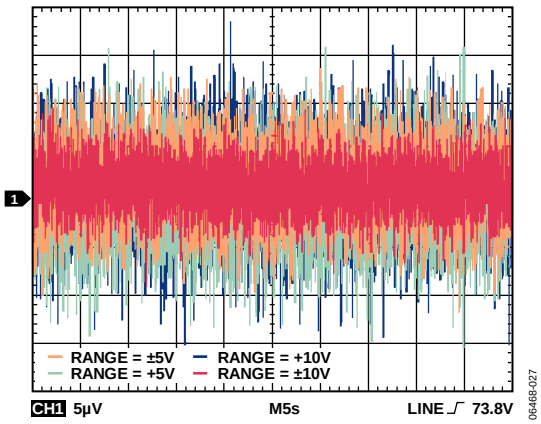


Figure 33. Peak-to-Peak Noise, 100 kHz Bandwidth

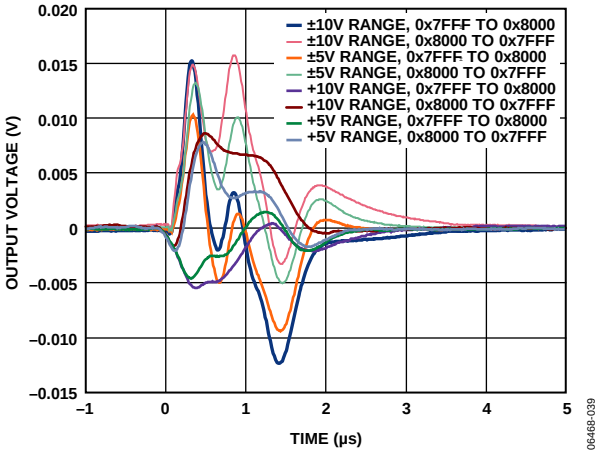


Figure 31. Digital-to-Analog Glitch Energy

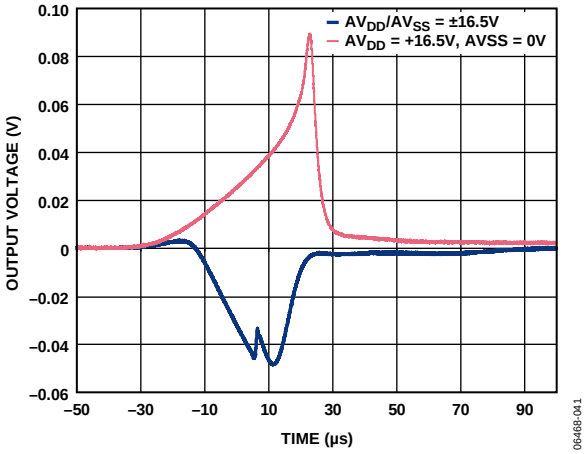


Figure 34. Output Glitch on Power-Up

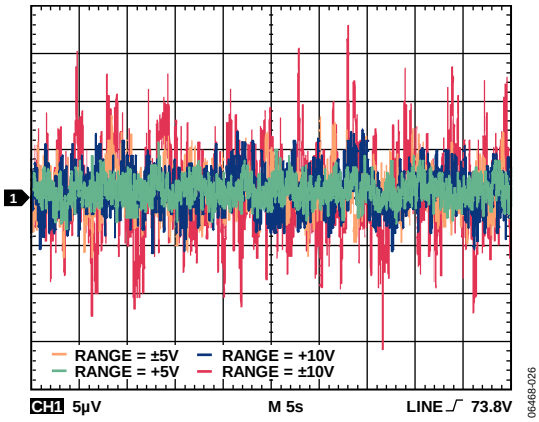


Figure 32. Peak-to-Peak Noise, 0.1 Hz to 10 Hz Bandwidth

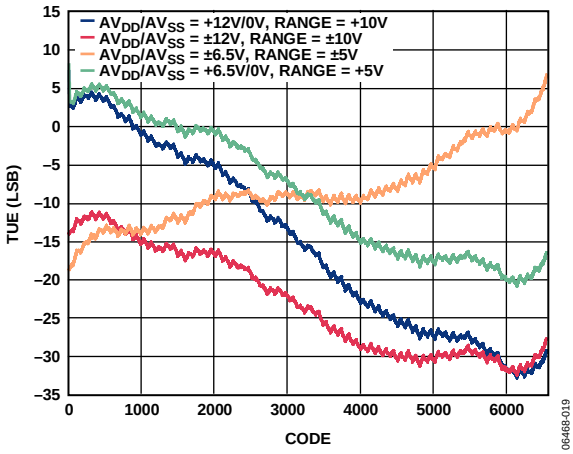


Figure 35. AD5754 Total Unadjusted Error vs. Code

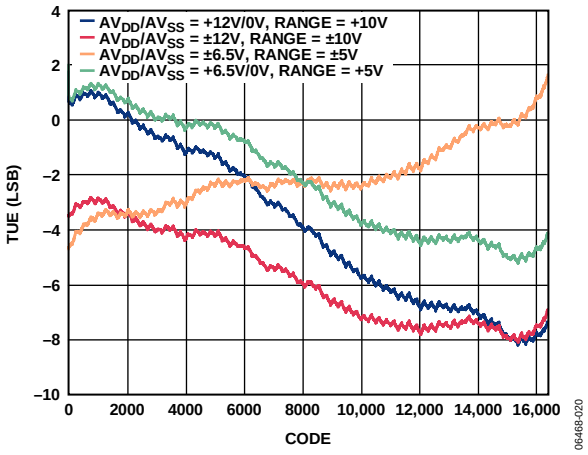


*Figure 36. AD5734 Total Unadjusted Error vs. Code*

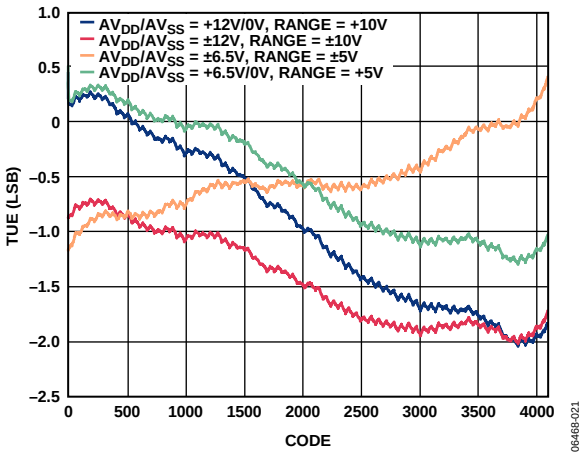


*Figure 37. AD5724 Total Unadjusted Error vs. Code*

# TERMINOLOGY

**Relative Accuracy or Integral Nonlinearity (INL)**
For the DAC, relative accuracy, or integral nonlinearity, is a measure of the maximum deviation in LSBs from a straight line passing through the endpoints of the DAC transfer function. A typical INL vs. code plot can be seen in Figure 6.

**Differential Nonlinearity (DNL)**
Differential nonlinearity is the difference between the measured change and the ideal 1 LSB change between any two adjacent codes. A specified differential nonlinearity of ±1 LSB maximum ensures monotonicity. This DAC is guaranteed monotonic by design. A typical DNL vs. code plot can be seen in Figure 9.

**Monotonicity**
A DAC is monotonic if the output either increases or remains constant for increasing digital input code. The AD5724/AD5734/AD5754 are monotonic over their full operating temperature range.

**Bipolar Zero Error**
Bipolar zero error is the deviation of the analog output from the ideal half-scale output of 0 V when the DAC register is loaded with 0x8000 (straight binary coding) or 0x0000 (twos complement coding). A plot of bipolar zero error vs. temperature can be seen in Figure 23.

**Bipolar Zero TC**
Bipolar zero TC is a measure of the change in the bipolar zero error with a change in temperature. It is expressed in ppm FSR/°C.

**Zero-Scale Error or Negative Full-Scale Error**
Zero-scale error is the error in the DAC output voltage when 0x0000 (straight binary coding) or 0x8000 (twos complement coding) is loaded to the DAC register. Ideally, the output voltage should be negative full-scale − 1 LSB. A plot of zero-scale error vs. temperature can be seen in Figure 22.

**Zero-Scale TC**
Zero-scale TC is a measure of the change in zero-scale error with a change in temperature. Zero-scale TC is expressed in ppm FSR/°C.

**Output Voltage Settling Time**
Output voltage settling time is the amount of time required for the output to settle to a specified level for a full-scale input change. A plot for full-scale settling time can be seen in Figure 27.

**Slew Rate**
The slew rate of a device is a limitation in the rate of change of the output voltage. The output slewing speed of a voltage output DAC is usually limited by the slew rate of the amplifier used at its output. Slew rate is measured from 10% to 90% of the output signal and is given in V/µs.

**Gain Error**
Gain error is a measure of the span error of the DAC. It is the deviation in slope of the DAC transfer characteristic from the ideal and is expressed in % FSR. A plot of gain error vs. temperature can be seen in Figure 24.

**Gain TC**
Gain TC is a measure of the change in gain error with changes in temperature. Gain TC is expressed in ppm FSR/°C.

**Total Unadjusted Error (TUE)**
Total unadjusted error is a measure of the output error taking all the various errors into account, namely INL error, offset error, gain error, and output drift over supplies, temperature, and time. TUE is expressed in % FSR.

**Digital-to-Analog Glitch Impulse**
Digital-to-analog glitch impulse is the impulse injected into the analog output when the input code in the DAC register changes state, but the output voltage remains constant. It is normally specified as the area of the glitch in nV-sec and is measured when the digital input code is changed by 1 LSB at the major carry transition (0x7FFF to 0x8000). See Figure 31.

**Glitch Impulse Peak Amplitude**
Glitch impulse peak amplitude is the peak amplitude of the impulse injected into the analog output when the input code in the DAC register changes state. It is specified as the amplitude of the glitch in mV and is measured when the digital input code is changed by 1 LSB at the major carry transition (0x7FFF to 0x8000). See Figure 31.

**Digital Feedthrough**
Digital feedthrough is a measure of the impulse injected into the analog output of the DAC from the digital inputs of the DAC, but is measured when the DAC output is not updated. It is specified in nV-sec and measured with a full-scale code change on the data bus.

**Power Supply Sensitivity**
Power supply sensitivity indicates how the output of the DAC is affected by changes in the power supply voltage. It is measured by superimposing a 50 Hz/60 Hz, 200 mV p-p sine wave on the supply voltages and measuring the proportion of the sine wave that transfers to the outputs.

**DC Crosstalk**

This is the dc change in the output level of one DAC in response to a change in the output of another DAC. It is measured with a full-scale output change on one DAC while monitoring another DAC. It is expressed in LSBs.

**Digital Crosstalk**

Digital crosstalk is a measure of the impulse injected into the analog output of one DAC from the digital inputs of another DAC, but is measured when the DAC output is not updated. It is specified in nV-sec and measured with a full-scale code change on the data bus.

**DAC-to-DAC Crosstalk**

DAC-to-DAC crosstalk is the glitch impulse transferred to the output of one DAC due to a digital code change and a subsequent output change of another DAC. This includes both digital and analog crosstalk. It is measured by loading one of the DACs with a full-scale code change (all 0s to all 1s and vice versa) with $\overline{\text{LDAC}}$ low and monitoring the output of another DAC. The energy of the glitch is expressed in nV-sec.

# THEORY OF OPERATION

The AD5724/AD5734/AD5754 are quad, 12-/14-/16-bit, serial input, unipolar/bipolar, voltage output DACs. They operate from unipolar supply voltages of +4.5 V to +16.5 V or bipolar supply voltages of ±4.5 V to ±16.5 V. In addition, the parts have software-selectable output ranges of +5 V, +10 V, +10.8 V, ±5 V, ±10 V, and ±10.8 V. Data is written to the AD5724/AD5734/AD5754 in a 24-bit word format via a 3-wire serial interface. The devices also offer an SDO pin to facilitate daisy-chaining or readback.

The AD5724/AD5734/AD5754 incorporate a power-on reset circuit to ensure that the DAC registers power up loaded with 0x0000. When powered on, the outputs are clamped to 0 V via a low impedance path.

## ARCHITECTURE

The DAC architecture consists of a string DAC followed by an output amplifier. Figure 38 shows a block diagram of the DAC architecture. The reference input is buffered before being applied to the DAC.

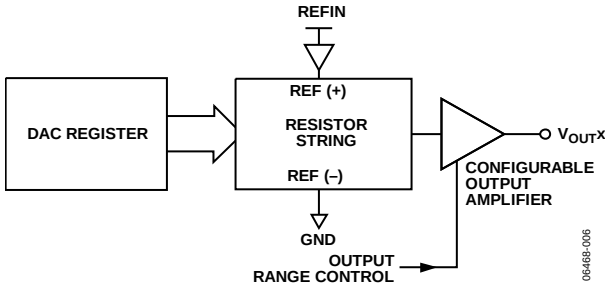


*Figure 38. DAC Architecture Block Diagram*

The resistor string structure is shown in Figure 39. It is a string of resistors, each of value R. The code loaded to the DAC register determines the node on the string where the voltage is to be tapped off and fed into the output amplifier. The voltage is tapped off by closing one of the switches connecting the string to the amplifier. Because it is a string of resistors, it is guaranteed monotonic.

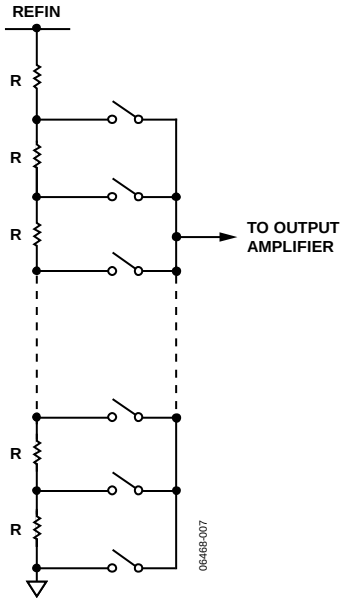


*Figure 39. Resistor String Structure*

### *Output Amplifiers*

The output amplifiers are capable of generating both unipolar and bipolar output voltages. They are capable of driving a load of 2 kΩ in parallel with 4000 pF to GND. The source and sink capabilities of the output amplifiers can be seen in Figure 26. The slew rate is 3.5 V/μs with a full-scale settling time of 10 μs.

### *Reference Buffers*

The AD5724/AD5734/AD5754 require an external reference source. The reference input has an input range of 2 V to 3 V, with 2.5 V for specified performance. This input voltage is then buffered before it is applied to the DAC cores.

## SERIAL INTERFACE

The AD5724/AD5734/AD5754 are controlled over a versatile 3-wire serial interface that operates at clock rates up to 30 MHz. It is compatible with SPI, QSPI™, MICROWIRE™, and DSP standards.

### *Input Shift Register*

The input shift register is 24 bits wide. Data is loaded into the device MSB first as a 24-bit word under the control of a serial clock input, SCLK. The input register consists of a read/write bit, three register select bits, three DAC address bits, and 16 data bits. The timing diagram for this operation is shown in Figure 2.

### Standalone Operation

The serial interface works with both a continuous and noncontinuous serial clock. A continuous SCLK source can be used only if SYNC is held low for the correct number of clock cycles. In gated clock mode, a burst clock containing the exact number of clock cycles must be used, and SYNC must be taken high after the final clock to latch the data. The first falling edge of SYNC starts the write cycle. Exactly 24 falling clock edges must be applied to SCLK before SYNC is brought high again. If SYNC is brought high before the 24th falling SCLK edge, the data written is invalid. If more than 24 falling SCLK edges are applied before SYNC is brought high, the input data is also invalid. The input register addressed is updated on the rising edge of SYNC. For another serial transfer to take place, SYNC must be brought low again. After the end of the serial data transfer, data is automatically transferred from the input shift register to the addressed register.

When the data has been transferred into the chosen register of the addressed DAC, all DAC registers and outputs can be updated by taking LDAC low while SYNC is high.

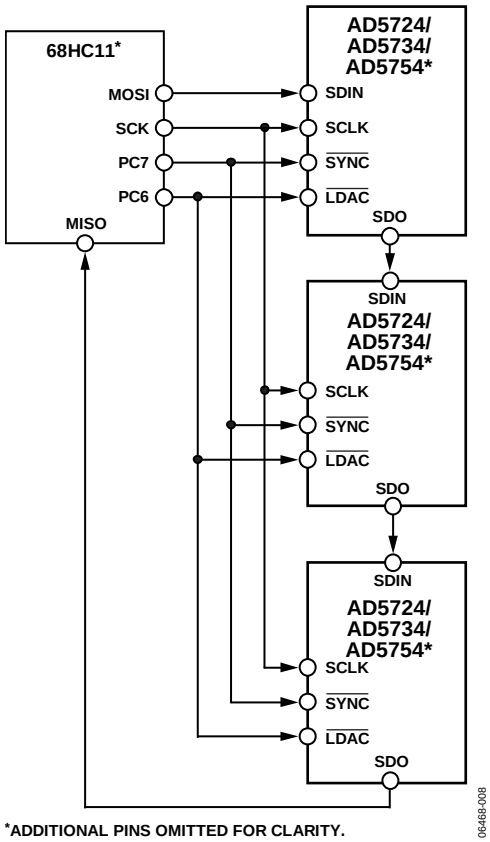


*Figure 40. Daisy Chaining the AD5724/AD5734/AD5754*

### Daisy-Chain Operation

For systems that contain several devices, the SDO pin can be used to daisy-chain several devices together. Daisy-chain mode can be useful in system diagnostics and in reducing the number of serial interface lines. The first falling edge of SYNC starts the write cycle. SCLK is continuously applied to the input shift register when SYNC is low. If more than 24 clock pulses are applied, the data ripples out of the shift register and appears on the SDO line. This data is clocked out on the rising edge of SCLK and is valid on the falling edge. By connecting the SDO of the first device to the SDIN input of the next device in the chain, a multidevice interface is constructed. Each device in the system requires 24 clock pulses. Therefore, the total number of clock cycles must equal 24 × N, where N is the total number of AD5724/AD5734/AD5754 devices in the chain. When the serial transfer to all devices is complete, SYNC is taken high. This latches the input data in each device in the daisy chain and prevents any further data from being clocked into the input shift register. The serial clock can be a continuous or a gated clock.

A continuous SCLK source can only be used if SYNC is held low for the correct number of clock cycles. In gated clock mode, a burst clock containing the exact number of clock cycles must be used, and SYNC must be taken high after the final clock to latch the data.

### Readback Operation

Readback mode is invoked by setting the R/W bit = 1 in the serial input shift register write. (If the SDO output is disabled via the SDO disable bit in the control register, it is automatically enabled for the duration of the read operation, after which it is disabled again). With R/W = 1, Bit A2 to Bit A0 in association with Bit REG2 to Bit REG0, select the register to be read. The remaining data bits in the write sequence are don't care bits. During the next SPI write, the data appearing on the SDO output contains the data from the previously addressed register. For a read of a single register, the NOP command can be used in clocking out the data from the selected register on SDO. The readback diagram in Figure 4 shows the readback sequence. For example, to read back the DAC register of Channel A, the following sequence should be implemented:

1. Write 0x800000 to the AD5724/AD5734/AD5754 input register. This configures the part for read mode with the DAC register of Channel A selected. Note that all the data bits, DB15 to DB0, are don't care bits.
2. Follow this with a second write, a NOP condition, 0x180000. During this write, the data from the register is clocked out on the SDO line.

## LOAD DAC ($\overline{\text{LDAC}}$)

After data has been transferred into the input register of the DACs, there are two ways to update the DAC registers and DAC outputs. Depending on the status of both $\overline{\text{SYNC}}$ and $\overline{\text{LDAC}}$, one of two update modes is selected: individual DAC updating or simultaneous updating of all DACs.

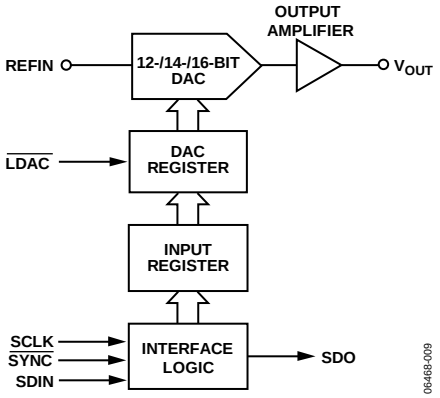


*Figure 41. Simplified Diagram of Input Loading Circuitry for One DAC*

### *Individual DAC Updating*

In this mode, $\overline{\text{LDAC}}$ is held low while data is being clocked into the input shift register. The addressed DAC output is updated on the rising edge of $\overline{\text{SYNC}}$.

### *Simultaneous Updating of All DACs*

In this mode, $\overline{\text{LDAC}}$ is held high while data is being clocked into the input shift register. All DAC outputs are asynchronously updated by taking $\overline{\text{LDAC}}$ low after $\overline{\text{SYNC}}$ has been taken high. The update now occurs on the falling edge of $\overline{\text{LDAC}}$.

## ASYNCHRONOUS CLEAR ($\overline{\text{CLR}}$)

$\overline{\text{CLR}}$ is an active low clear that allows the outputs to be cleared to either zero-scale code or midscale code. The clear code value is user-selectable via the CLR select bit of the control register (see the Control Register section). It is necessary to maintain $\overline{\text{CLR}}$ low for a minimum amount of time to complete the operation (see Figure 2). When the $\overline{\text{CLR}}$ signal is returned high, the output remains at the cleared value until a new value is programmed. The outputs cannot be updated with a new value while the $\overline{\text{CLR}}$ pin is low. A clear operation can also be performed via the clear command in the control register.

## CONFIGURING THE AD5724/AD5734/AD5754

When the power supplies are applied to the AD5724/AD5734/AD5754, the power-on reset circuit ensures that all registers default to 0. This places all channels in power-down mode. The $DV_{CC}$ should be brought high before any of the interface lines are powered. If this is not done, the first write to the device may be ignored. The first communication to the AD5724/AD5734/AD5754 should be to set the required output range on all channels (the default range is the 5 V unipolar range) by writing to the output range select register. The user should then write to the power control register to power on the required channels. To program an output value on a channel, that channel must first be powered up; any writes to a channel while it is in power-down mode are ignored. The AD5724/ AD5734/AD5754 operate with a wide power supply range. It is important that the power supply applied to the parts provides adequate headroom to support the chosen output ranges.

## TRANSFER FUNCTION

Table 7 to Table 15 show the relationships of the ideal input code to output voltage for the AD5754, AD5734, and AD5724, respectively, for all output voltage ranges. For unipolar output ranges, the data coding is straight binary. For bipolar output ranges, the data coding is user-selectable via the BIN/$\overline{\text{2sCOMP}}$ pin and can be either offset binary or twos complement.

For a unipolar output range, the output voltage expression is given by

$$V_{OUT} = V_{REFIN} \times Gain\left[\frac{D}{2^N}\right]$$

For a bipolar output range, the output voltage expression is given by

$$V_{OUT} = V_{REFIN} \times Gain\left[\frac{D}{2^N}\right] - \frac{Gain \times V_{REFIN}}{2}$$

where:
*D* is the decimal equivalent of the code loaded to the DAC.
*N* is the bit resolution of the DAC.
$V_{REFIN}$ is the reference voltage applied at the REFIN pin.
*Gain* is an internal gain whose value depends on the output range selected by the user, as shown in Table 6.

**Table 6. Internal Gain Values**

| Output Range (V) | Gain Value |
|---|---|
| +5 | 2 |
| +10 | 4 |
| +10.8 | 4.32 |
| ±5 | 4 |
| ±10 | 8 |
| ±10.8 | 8.64 |

### *Ideal Output Voltage to Input Code Relationship—AD5754*

**Table 7. Bipolar Output, Offset Binary Coding**

| Digital Input | | | | Analog Output | | |
|---|---|---|---|---|---|---|
| **MSB** | | | **LSB** | **±5 V Output Range** | **±10 V Output Range** | **±10.8 V Output Range** |
| 1111 | 1111 | 1111 | 1111 | +2 × REFIN × (32,767/32,768) | +4 × REFIN × (32,767/32,768) | +4.32 × REFIN × (32,767/32,768) |
| 1111 | 1111 | 1111 | 1110 | +2 × REFIN × (32,766/32,768) | +4 × REFIN × (32,766/32,768) | +4.32 × REFIN × (32,766/32,768) |
| … | … | … | … | … | … | … |
| 1000 | 0000 | 0000 | 0001 | +2 × REFIN × (1/32,768) | +4 × REFIN × (1/32,768) | +4.32 × REFIN × (1/32,768) |
| 1000 | 0000 | 0000 | 0000 | 0 V | 0 V | 0 V |
| 0111 | 1111 | 1111 | 1111 | −2 × REFIN × (1/32,768) | −4 × REFIN × (1/32,768) | −4.32 × REFIN × (32,766/32,768) |
| … | … | … | … | … | … | … |
| 0000 | 0000 | 0000 | 0001 | −2 × REFIN × (32,766/32,768) | −4 × REFIN × (32,766/32,768) | −4.32 × REFIN × (32,766/32,768) |
| 0000 | 0000 | 0000 | 0000 | −2 × REFIN × (32,767/32,768 | −4 × REFIN × (32,767/32,768) | −4.32 × REFIN × (32,767/32,768) |

**Table 8. Bipolar Output, Twos Complement Coding**

| Digital Input | | | | Analog Output | | |
|---|---|---|---|---|---|---|
| **MSB** | | | **LSB** | **±5 V Output Range** | **±10 V Output Range** | **±10.8 V Output Range** |
| 0111 | 1111 | 1111 | 1111 | +2 × REFIN × (32,767/32,768) | +4 × REFIN × (32,767/32,768) | +4.32 × REFIN × (32,767/32,768) |
| 0111 | 1111 | 1111 | 1110 | +2 × REFIN × (32,766/32,768) | +4 × REFIN × (32,766/32,768) | +4.32 × REFIN × (32,766/32,768) |
| … | … | … | … | … | … | … |
| 0000 | 0000 | 0000 | 0001 | +2 × REFIN × (1/32,768) | +4 × REFIN × (1/32,768) | +4.32 × REFIN × (1/32,768) |
| 0000 | 0000 | 0000 | 0000 | 0 V | 0 V | 0 V |
| 1111 | 1111 | 1111 | 1111 | −2 × REFIN × (1/32,768) | −4 × REFIN × (1/32,768) | −4.32 × REFIN × (1/32,768) |
| … | … | … | … | … | … | … |
| 1000 | 0000 | 0000 | 0001 | −2 × REFIN × (32,766/32,768) | −4 × REFIN × (32,766/32,768) | −4.32 × REFIN × (32,766/32,768) |
| 1000 | 0000 | 0000 | 0000 | −2 × REFIN × (32,767/32,768) | −4 × REFIN × (32,767/32,768) | −4.32 × REFIN × (32,767/32,768) |

**Table 9. Unipolar Output, Straight Binary Coding**

| Digital Input | | | | Analog Output | | |
|---|---|---|---|---|---|---|
| **MSB** | | | **LSB** | **+5 V Output Range** | **+10 V Output Range** | **+10.8 V Output Range** |
| 1111 | 1111 | 1111 | 1111 | +2 × REFIN × (65,535/65,536) | +4 × REFIN × (65,535/65,536) | +4.32 × REFIN × (65,535/65,536) |
| 1111 | 1111 | 1111 | 1110 | +2 × REFIN × (65,534/65,536) | +4 × REFIN × (65,534/65,536) | +4.32 × REFIN × (65,534/65,536) |
| … | … | … | … | … | … | … |
| 1000 | 0000 | 0000 | 0001 | +2 × REFIN × (32,769/65,536) | +4 × REFIN × (32,769/65,536) | +4.32 × REFIN × (32,769/65,536) |
| 1000 | 0000 | 0000 | 0000 | +2 × REFIN × (32,768/65,536) | +4 × REFIN × (32,768/65,536) | +4.32 × REFIN × (32,768/65,536) |
| 0111 | 1111 | 1111 | 1111 | +2 × REFIN × (32,767/65,536) | +4 × REFIN × (32,767/65,536) | +4.32 × REFIN × (32,767/65,536) |
| … | … | … | … | … | … | … |
| 0000 | 0000 | 0000 | 0001 | +2 × REFIN × (1/65,536) | +4 × REFIN × (1/65,536) | +4.32 × REFIN × (1/65,536) |
| 0000 | 0000 | 0000 | 0000 | 0 V | 0 V | 0 V |

### *Ideal Output Voltage to Input Code Relationship—AD5734*

**Table 10. Bipolar Output, Offset Binary Coding**

| Digital Input | | | | Analog Output | | |
|---|---|---|---|---|---|---|
| **MSB** | | | **LSB** | **±5 V Output Range** | **±10 V Output Range** | **±10.8 V Output Range** |
| 11 | 1111 | 1111 | 1111 | +2 × REFIN × (8191/8192) | +4 × REFIN × (8191/8192) | +4.32 × REFIN × (8191/8192) |
| 11 | 1111 | 1111 | 1110 | +2 × REFIN × (8190/8192) | +4 × REFIN × (8190/8192) | +4.32 × REFIN × (8190/8192) |
| … | … | … | … | … | … | … |
| 10 | 0000 | 0000 | 0001 | +2 × REFIN × (1/8192) | +4 × REFIN × (1/8192) | +4.32 × REFIN × (1/8192) |
| 10 | 0000 | 0000 | 0000 | 0 V | 0 V | 0 V |
| 01 | 1111 | 1111 | 1111 | −2 × REFIN × (1/8192) | −4 × REFIN × (1/8192) | −4.32 × REFIN × (1/8192) |
| … | … | … | … | … | … | … |
| 00 | 0000 | 0000 | 0001 | −2 × REFIN × (8190/8192) | −4 × REFIN × (8190/8192) | −4.32 × REFIN × (8190/8192) |
| 00 | 0000 | 0000 | 0000 | −2 × REFIN × (8191/8191) | −4 × REFIN × (8191/8192) | −4.32 × REFIN × (8191/8192) |

**Table 11. Bipolar Output, Twos Complement Coding**

| Digital Input | | | | Analog Output | | |
|---|---|---|---|---|---|---|
| **MSB** | | | **LSB** | **±5 V Output Range** | **±10 V Output Range** | **±10.8 V Output Range** |
| 01 | 1111 | 1111 | 1111 | +2 × REFIN × (8191/8192) | +4 × REFIN × (8191/8192) | +4.32 × REFIN × (8191/8192) |
| 01 | 1111 | 1111 | 1110 | +2 × REFIN × (8190/8192) | +4 × REFIN × (8190/8192) | +4.32 × REFIN × (8190/8192) |
| … | … | … | … | … | … | … |
| 00 | 0000 | 0000 | 0001 | +2 × REFIN × (1/8192) | +4 × REFIN × (1/8192) | +4.32 × REFIN × (1/8192) |
| 00 | 0000 | 0000 | 0000 | 0 V | 0 V | 0 V |
| 11 | 1111 | 1111 | 1111 | −2 × REFIN × (1/8192) | −4 × REFIN × (1/8192) | −4.32 × REFIN × (1/8192) |
| … | … | … | … | … | … | … |
| 10 | 0000 | 0000 | 0001 | −2 × REFIN × (8190/8192) | −4 × REFIN × (8190/8192) | −4.32 × REFIN × (8190/8192) |
| 10 | 0000 | 0000 | 0000 | −2 × REFIN × (8191/8192) | −4 × REFIN × (8191/8192) | −4.32 × REFIN × (8191/8192) |

**Table 12. Unipolar Output, Straight Binary Coding**

| Digital Input | | | | Analog Output | | |
|---|---|---|---|---|---|---|
| **MSB** | | | **LSB** | **+5 V Output Range** | **+10 V Output Range** | **+10.8 V Output Range** |
| 11 | 1111 | 1111 | 1111 | +2 × REFIN × (16,383/16,384) | +4 × REFIN × (16,383/16,384) | +4.32 × REFIN × (16,383/16,384) |
| 11 | 1111 | 1111 | 1110 | +2 × REFIN × (16,382/16,384) | +4 × REFIN × (16,382/16,384) | +4.32 × REFIN × (16,382/16,384) |
| … | … | … | … | … | … | … |
| 10 | 0000 | 0000 | 0001 | +2 × REFIN × (8193/16,384) | +4 × REFIN × (8193/16,384) | +4.32 × REFIN × (8193/16,384) |
| 10 | 0000 | 0000 | 0000 | +2 × REFIN × (8192/16,384) | +4 × REFIN × (8192/16,384) | +4.32 × REFIN × (8192/16,384) |
| 01 | 1111 | 1111 | 1111 | +2 × REFIN × (8191/16,384) | +4 × REFIN × (8191/16,384) | +4.32 × REFIN × (8191/16,384) |
| … | … | … | … | … | … | … |
| 00 | 0000 | 0000 | 0001 | +2 × REFIN × (1/16,384) | +4 × REFIN × (1/16,384) | +4.32 × REFIN × (1/16,384) |
| 00 | 0000 | 0000 | 0000 | 0 V | 0 V | 0 V |

### *Ideal Output Voltage to Input Code Relationship—AD5724*

**Table 13. Bipolar Output, Offset Binary Coding**

| Digital Input | | | Analog Output | | |
|---|---|---|---|---|---|
| **MSB** | | **LSB** | **±5 V Output Range** | **±10 V Output Range** | **±10.8 V Output Range** |
| 1111 | 1111 | 1111 | +2 × REFIN × (2047/2048) | +4 × REFIN × (2047/2048) | +4.32 × REFIN × (2047/2048) |
| 1111 | 1111 | 1110 | +2 × REFIN × (2046/2048) | +4 × REFIN × (2046/2048) | +4.32 × REFIN × (2046/2048) |
| … | … | … | … | … | … |
| 1000 | 0000 | 0001 | +2 × REFIN × (1/2048) | +4 × REFIN × (1/2048) | +4.32 × REFIN × (1/2048) |
| 1000 | 0000 | 0000 | 0 V | 0 V | 0 V |
| 0111 | 1111 | 1111 | −2 × REFIN × (1/2048) | −4 × REFIN × (1/2048) | −4.32 × REFIN × (1/2048) |
| … | … | … | … | … | … |
| 0000 | 0000 | 0001 | −2 × REFIN × (2046/2048) | −4 × REFIN × (2046/2048) | −4.32 × REFIN × (2046/2048) |
| 0000 | 0000 | 0000 | −2 × REFIN × (2047/2047) | −4 × REFIN × (2047/2048) | −4.32 × REFIN × (2047/2048) |

**Table 14. Bipolar Output, Twos Complement Coding**

| Digital Input | | | Analog Output | | |
|---|---|---|---|---|---|
| **MSB** | | **LSB** | **±5 V Output Range** | **±10 V Output Range** | **±10.8 V Output Range** |
| 0111 | 1111 | 1111 | +2 × REFIN × (2047/2048) | +4 × REFIN × (2047/2048) | +4.32 × REFIN × (2047/2048) |
| 0111 | 1111 | 1110 | +2 × REFIN × (2046/2048) | +4 × REFIN × (2046/2048) | +4.32 × REFIN × (2046/2048) |
| … | … | … | … | … | … |
| 0000 | 0000 | 0001 | +2 × REFIN × (1/2048) | +4 × REFIN × (1/2048) | +4.32 × REFIN × (1/2048) |
| 0000 | 0000 | 0000 | 0 V | 0 V | 0 V |
| 1111 | 1111 | 1111 | −2 × REFIN × (1/2048) | −4 × REFIN × (1/2048) | −4.32 × REFIN × (1/2048) |
| … | … | … | … | … | … |
| 1000 | 0000 | 0001 | −2 × REFIN × (2046/2048) | −4 × REFIN × (2046/2048) | −4.32 × REFIN × (2046/2048) |
| 1000 | 0000 | 0000 | −2 × REFIN × (2047/2048) | −4 × REFIN × (2047/2048) | −4.32 × REFIN × (2047/2048) |

**Table 15. Unipolar Output, Straight Binary Coding**

| Digital Input | | | Analog Output | | |
|---|---|---|---|---|---|
| **MSB** | | **LSB** | **+5 V Output Range** | **+10 V Output Range** | **+10.8 V Output Range** |
| 1111 | 1111 | 1111 | +2 × REFIN × (4095/4096) | +4 × REFIN × (4095/4096) | +4.32 × REFIN × (4095/4096) |
| 1111 | 1111 | 1110 | +2 × REFIN × (4094/4096) | +4 × REFIN × (4094/4096) | +4.32 × REFIN × (4094/4096) |
| … | … | … | … | … | … |
| 1000 | 0000 | 0001 | +2 × REFIN × (2049/4096) | +4 × REFIN × (2049/4096) | +4.32 × REFIN × (2049/4096) |
| 1000 | 0000 | 0000 | +2 × REFIN × (2048/4096) | +4 × REFIN × (2048/4096) | +4.32 × REFIN × (2048/4096) |
| 0111 | 1111 | 1111 | +2 × REFIN × (2047/4096) | +4 × REFIN × (2047/4096) | +4.32 × REFIN × (2047/4096) |
| … | … | … | … | … | … |
| 0000 | 0000 | 0001 | +2 × REFIN × (1/4096) | +4 × REFIN × (1/4096) | +4.32 × REFIN × (1/4096) |
| 0000 | 0000 | 0000 | 0 V | 0 V | 0 V |

## INPUT SHIFT REGISTER

The input shift register is 24 bits wide and consists of a read/write bit (R/$\overline{W}$), a reserved bit (zero) that must always be set to 0, three register select bits (REG0, REG1, REG2), three DAC address bits (A2, A1, A0), and 16 data bits (data). The register data is clocked in MSB first on the SDIN pin. Table 16 shows the register format and Table 17 describes the function of each bit in the register. All registers are read/write registers.

**Table 16. Input Register Format**

**MSB** **LSB**

| DB23 | DB22 | DB21 | DB20 | DB19 | DB18 | DB17 | DB16 | DB15 to DB0 |
|---|---|---|---|---|---|---|---|---|
| R/$\overline{W}$ | Zero | REG2 | REG1 | REG0 | A2 | A1 | A0 | Data |

**Table 17. Input Register Bit Functions**

| Bit Mnemonic | Description | | | |
|---|---|---|---|---|
| R/$\overline{W}$ | Indicates a read from or a write to the addressed register. | | | |
| REG2, REG1, REG0 | Used in association with the address bits to determine if a write operation is to the DAC register, the output range select register, the power control register, or the control register. | | | |
| | **REG2** | **REG1** | **REG0** | **Function** |
| | 0 | 0 | 0 | DAC register |
| | 0 | 0 | 1 | Output range select register |
| | 0 | 1 | 0 | Power control register |
| | 0 | 1 | 1 | Control register |
| A2, A1, A0 | These DAC address bits are used to decode the DAC channels. | | | |
| | **A2** | **A1** | **A0** | **Channel Address** |
| | 0 | 0 | 0 | DAC A |
| | 0 | 0 | 1 | DAC B |
| | 0 | 1 | 0 | DAC C |
| | 0 | 1 | 1 | DAC D |
| | 1 | 0 | 0 | All four DACs |
| DB15 to DB0 | Data bits. | | | |

## DAC REGISTER

The DAC register is addressed by setting the three REG bits to 000. The DAC address bits select the DAC channel where the data transfer is to take place (see Table 17). The data bits are in positions DB15 to DB0 for the AD5754 (see Table 18), DB15 to DB2 for the AD5734 (see Table 19), and DB15 to DB4 for the AD5724 (see Table 20).

**Table 18. Programming the AD5754 DAC Register**

**MSB** **LSB**

| R/$\overline{W}$ | Zero | REG2 | REG1 | REG0 | A2 | A1 | A0 | DB15 to DB0 |
|---|---|---|---|---|---|---|---|---|
| 0 | 0 | 0 | 0 | 0 | DAC address | | | 16-bit DAC data |

**Table 19. Programming the AD5734 DAC Register**

**MSB** **LSB**

| R/$\overline{W}$ | Zero | REG2 | REG1 | REG0 | A2 | A1 | A0 | DB15 to DB2 | DB1 | DB0 |
|---|---|---|---|---|---|---|---|---|---|---|
| 0 | 0 | 0 | 0 | 0 | DAC address | | | 14-bit DAC data | X | X |

**Table 20. Programming the AD5724 DAC Register**

**MSB** **LSB**

| R/$\overline{W}$ | Zero | REG2 | REG1 | REG0 | A2 | A1 | A0 | DB15 to DB4 | DB3 | DB2 | DB1 | DB0 |
|---|---|---|---|---|---|---|---|---|---|---|---|---|
| 0 | 0 | 0 | 0 | 0 | DAC address | | | 12-bit DAC data | X | X | X | X |

## OUTPUT RANGE SELECT REGISTER

The output range select register is addressed by setting the three REG bits to 001. The DAC address bits select the DAC channel and the range bits (R2, R1, R0) select the required output range (see Table 21 and Table 22).

**Table 21. Programming the Required Output Range**

| MSB | | | | | | | | | | | LSB |
|---|---|---|---|---|---|---|---|---|---|---|---|
| **R/$\overline{W}$** | **Zero** | **REG2** | **REG1** | **REG0** | **A2** | **A1** | **A0** | **DB15 to DB3** | **DB2** | **DB1** | **DB0** |
| 0 | 0 | 0 | 0 | 1 | DAC address | | | Don't care | R2 | R1 | R0 |

**Table 22. Output Range Options**

| R2 | R1 | R0 | Output Range (V) |
|---|---|---|---|
| 0 | 0 | 0 | +5 |
| 0 | 0 | 1 | +10 |
| 0 | 1 | 0 | +10.8 |
| 0 | 1 | 1 | ±5 |
| 1 | 0 | 0 | ±10 |
| 1 | 0 | 1 | ±10.8 |

## CONTROL REGISTER

The control register is addressed by setting the three REG bits to 011. The value written to the address and data bits determines the control function selected. The control register options are shown in Table 23 and Table 24.

**Table 23. Programming the Control Register**

| MSB | | | | | | | | | | | | LSB |
|---|---|---|---|---|---|---|---|---|---|---|---|---|
| **R/$\overline{W}$** | **Zero** | **REG2** | **REG1** | **REG0** | **A2** | **A1** | **A0** | **DB15 to DB4** | **DB3** | **DB2** | **DB1** | **DB0** |
| 0 | 0 | 0 | 1 | 1 | 0 | 0 | 0 | NOP, data = don't care | | | | |
| 0 | 0 | 0 | 1 | 1 | 0 | 0 | 1 | Don't care | TSD enable | Clamp enable | CLR select | SDO disable |
| 0 | 0 | 0 | 1 | 1 | 1 | 0 | 0 | Clear, data = don't care | | | | |
| 0 | 0 | 0 | 1 | 1 | 1 | 0 | 1 | Load, data = don't care | | | | |

**Table 24. Explanation of Control Register Options**

| Option | Description |
|---|---|
| NOP | No operation instruction used in readback operations. |
| Clear | Addressing this function sets the DAC registers to the clear code and updates the outputs. |
| Load | Addressing this function updates the DAC registers and, consequently, the DAC outputs. |
| SDO Disable | Set by the user to disable the SDO output. Cleared by the user to enable the SDO output (default). |
| CLR Select | See Table 25 for a description of the CLR select operation. |
| Clamp Enable | Set by the user to enable the current-limit clamp. The channel does not power down upon detection of an overcurrent; the current is clamped at 20 mA (default).<br>Cleared by the user to disable the current-limit clamp. The channel powers down upon detection of an overcurrent. |
| TSD Enable | Set by the user to enable the thermal shutdown feature. Cleared by the user to disable the thermal shutdown feature (default). |

**Table 25. CLR Select Options**

| | Output CLR Value | |
|---|---|---|
| **CLR Select Setting** | **Unipolar Output Range** | **Bipolar Output Range** |
| 0 | 0 V | 0 V |
| 1 | Midscale | Negative full scale |

## POWER CONTROL REGISTER

The power control register is addressed by setting the three REG bits to 010. This register allows the user to control and determine the power and thermal status of the AD5724/AD5734/AD5754. The power control register options are shown in Table 26 and Table 27.

**Table 26. Programming the Power Control Register**

MSB LSB

| R/$\overline{W}$ | Zero | REG2 | REG1 | REG0 | A2 | A1 | A0 | DB15 to DB11 | DB10 | DB9 | DB8 | DB7 | DB6 | DB5 | DB4 | DB3 | DB2 | DB1 | DB0 |
|---|---|---|---|---|---|---|---|---|---|---|---|---|---|---|---|---|---|---|---|
| 0 | 0 | 0 | 1 | 0 | 0 | 0 | 0 | X | $OC_D$ | $OC_C$ | $OC_B$ | $OC_A$ | 0 | TSD | 0 | $PU_D$ | $PU_C$ | $PU_B$ | $PU_A$ |

**Table 27. Power Control Register Functions**

| Option | Description |
|---|---|
| $PU_A$ | DAC A power-up. When set, this bit places DAC A in normal operating mode. When cleared, this bit places DAC A in power-down mode (default). After setting this bit to power DAC A, a power up time of 10 µs is required. During this power-up time, the DAC register should not be loaded to the DAC output (see the Load DAC/$\overline{LDAC}$ section). If the clamp enable bit of the control register is cleared, DAC A powers down automatically upon detection of an overcurrent, and $PU_A$ is cleared to reflect this. |
| $PU_B$ | DAC B power-up. When set, this bit places DAC B in normal operating mode. When cleared, this bit places DAC B in power-down mode (default). After setting this bit to power DAC B, a power up time of 10 µs is required. During this power-up time, the DAC register should not be loaded to the DAC output (see the Load DAC/$\overline{LDAC}$ section). If the clamp enable bit of the control register is cleared, DAC B powers down automatically upon detection of an overcurrent, and $PU_B$ is cleared to reflect this. |
| $PU_C$ | DAC C power-up. When set, this bit places DAC C in normal operating mode. When cleared, this bit places DAC C in power-down mode (default). After setting this bit to power DAC C, a power up time of 10 µs is required. During this power-up time, the DAC register should not be loaded to the DAC output (see the Load DAC/$\overline{LDAC}$ section). If the clamp enable bit of the control register is cleared, DAC C powers down automatically upon detection of an overcurrent, and $PU_C$ is cleared to reflect this. |
| $PU_D$ | DAC D power-up. When set, this bit places DAC D in normal operating mode. When cleared, this bit places DAC D in power-down mode (default). After setting this bit to power DAC D, a power up time of 10 µs is required. During this power-up time, the DAC register should not be loaded to the DAC output (see the Load DAC/$\overline{LDAC}$ section). If the clamp enable bit of the control register is cleared, DAC D powers down automatically upon detection of an overcurrent, and $PU_D$ is cleared to reflect this. |
| TSD | Thermal shutdown alert. Read-only bit. In the event of an overtemperature situation, the four DACs are powered down and this bit is set. |
| $OC_A$ | DAC A overcurrent alert. Read-only bit. In the event of an overcurrent situation on DAC A, this bit is set. |
| $OC_B$ | DAC B overcurrent alert. Read-only bit. In the event of an overcurrent situation on DAC B, this bit is set. |
| $OC_C$ | DAC C overcurrent alert. Read-only bit. In the event of an overcurrent situation on DAC C, this bit is set. |
| $OC_D$ | DAC D overcurrent alert. Read-only bit. In the event of an overcurrent situation on DAC D, this bit is set. |

# FEATURES

## ANALOG OUTPUT CONTROL

In many industrial process control applications, it is vital that the output voltage be controlled during power-up. When the supply voltages change during power-up, the $V_{OUT}$ pins are clamped to 0 V via a low impedance path (approximately 4 kΩ). To prevent the output amplifiers from being shorted to 0 V during this time, Transmission Gate G1 is also opened (see Figure 42). These conditions are maintained until the power supplies have stabilized and a valid word is written to a DAC register. At this time, G2 opens and G1 closes.

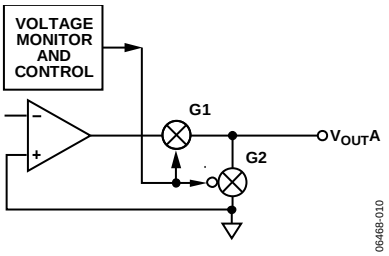


*Figure 42. Analog Output Control Circuitry*

## POWER-DOWN MODE

Each DAC channel of the AD5724/AD5734/AD5754 can be individually powered down. By default, all channels are in power-down mode. The power status is controlled by the power control register (see Table 26 and Table 27 for details). When a channel is in power-down mode, its output pin is clamped to ground through a resistance of approximately 4 kΩ and the output of the amplifier is disconnected from the output pin.

## OVERCURRENT PROTECTION

Each DAC channel of the AD5724/AD5734/AD5754 incorporates individual overcurrent protection. The user has two options for the configuration of the overcurrent protection: constant current clamp or automatic channel power-down. The configuration of the overcurrent protection is selected via the clamp enable bit in the control register.

### *Constant Current Clamp (Clamp Enable = 1)*

If a short circuit occurs in this configuration, the current is clamped at 20 mA. This event is signaled to the user by the setting of the appropriate overcurrent ($OC_X$) bit in the power control register. Upon removal of the short-circuit fault, the $OC_X$ bit is cleared.

### *Automatic Channel Power-Down (Clamp Enable = 0)*

If a short circuit occurs in this configuration, the shorted channel powers down and its output is clamped to ground via a resistance of approximately 4 kΩ. At this time, the output of the amplifier is disconnected from the output pin. The short-circuit event is signaled to the user via the overcurrent ($OC_X$) bits, and the power-up ($PU_X$) bits indicate which DACs have powered down. After the fault is rectified, the channels can be powered up again by setting the $PU_X$ bits.

## THERMAL SHUTDOWN

The AD5724/AD5734/AD5754 incorporate a thermal shutdown feature that automatically shuts down the device if the core temperature exceeds approximately 150°C. The thermal shutdown feature is disabled by default and can be enabled via the TSD enable bit of the control register. In the event of a thermal shutdown, the TSD bit of the power control register is set.

# APPLICATIONS INFORMATION

## +5 V/±5 V OPERATION

When operating from a single +5 V supply or a dual ±5 V supply, an output range of +5 V or ±5 V is not achievable because sufficient headroom for the output amplifier is not available. In this situation, a reduced reference voltage can be used. For example, a 2 V reference voltage produces an output range of +4 V or ±4 V, and the 1 V of headroom is more than enough for full operation. A standard value voltage reference of 2.048 V can be used to produce output ranges of +4.096 V and ±4.096 V.

## LAYOUT GUIDELINES

In any circuit where accuracy is important, careful consideration of the power supply and ground return layout helps to ensure the rated performance. The printed circuit board on which the AD5724/AD5734/AD5754 are mounted should be designed so that the analog and digital sections are separated and confined to certain areas of the board. If the AD5724/AD5734/AD5754 are in a system where multiple devices require an AGND-to-DGND connection, the connection should be made at one point only. The star ground point should be established as close as possible to the device.

The AD5724/AD5734/AD5754 should have ample supply bypassing of a 10 µF capacitor in parallel with a 0.1 µF capacitor on each supply located as close to the package as possible, ideally right up against the device. The 10 µF capacitor is the tantalum bead type. The 0.1 µF capacitor should have low effective series resistance (ESR) and low effective series inductance (ESI), such as the common ceramic types, which provide a low impedance path to ground at high frequencies to handle transient currents due to internal logic switching.

The power supply lines of the AD5724/AD5734/AD5754 should use as large a trace as possible to provide low impedance paths and reduce the effects of glitches on the power supply line. Fast switching signals, such as a data clock, should be shielded with digital ground to avoid radiating noise to other parts of the board, and they should never be run near the reference inputs. A ground line routed between the SDIN and SCLK lines helps reduce crosstalk between them (this is not required on a multilayer board that has a separate ground plane, but separating the lines does help). It is essential to minimize noise on the REFIN line because any unwanted signals will couple through to the DAC outputs.

Avoid crossover of digital and analog signals. Traces on opposite sides of the board should run at right angles to each other. This reduces the effects of feedthrough on the board. A microstrip technique is by far the best method, but it is not always possible with a double-sided board. In this technique, the component side of the board is dedicated to a ground plane, and signal traces are placed on the solder side.

## GALVANICALLY ISOLATED INTERFACE

In many process control applications, it is necessary to provide an isolation barrier between the controller and the unit being controlled to protect and isolate the controlling circuitry from any hazardous common-mode voltages that may occur. The *i*Coupler® family of products from Analog Devices, Inc., provides voltage isolation in excess of 2.5 kV. The serial loading structure of the AD5724/AD5734/AD5754 makes them ideal for isolated interfaces because the number of interface lines is kept to a minimum. Figure 43 shows a 4-channel isolated interface to the AD5724/AD5734/AD5754 using an ADuM1400. For further information, visit http://www.analog.com/icouplers.

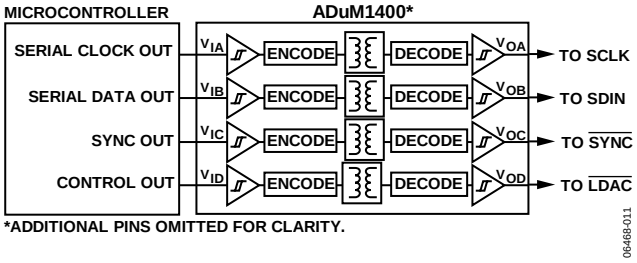


*Figure 43. Isolated Interface*

## VOLTAGE REFERENCE SELECTION

To achieve optimum performance from the AD5724/AD5734/AD5754 over their full operating temperature range, a precision voltage reference must be used. Thought should be given to the selection of a precision voltage reference. The voltage applied to the reference inputs are used to provide a buffered positive and negative reference for the DAC cores. Therefore, any error in the voltage reference is reflected in the outputs of the device.

There are four possible sources of error to consider when choosing a voltage reference for high accuracy applications: initial accuracy, temperature coefficient of the output voltage, long-term drift, and output voltage noise.

- Initial accuracy error on the output voltage of an external reference can lead to a full-scale error in the DAC. Therefore, to minimize these errors, a reference with low initial accuracy error specification is preferred. Choosing a reference with an output trim adjustment, such as the ADR421, allows a system designer to trim out system errors by setting the reference voltage to a voltage other than the nominal. The trim adjustment can also be used to trim out temperature-induced errors.
- The temperature coefficient of a reference output voltage affects INL, DNL, and TUE. A reference with a tight temperature coefficient specification should be chosen to reduce the dependence of the DAC output voltage on ambient conditions.
- Long-term drift is a measure of how much the reference output voltage drifts over time. A reference with a tight long-term drift specification ensures that the overall solution remains relatively stable over its entire lifetime.

- Reference output voltage noise needs to be considered in high accuracy applications that have relatively low noise budgets. It is important to choose a reference with as low an output noise voltage as practical for the required system resolution. Precision voltage references such as the ADR431 (XFET® design) produce low output noise in the 0.1 Hz to 10 Hz range. However, as the circuit bandwidth increases, filtering the output of the reference may be required to minimize the output noise.

## MICROPROCESSOR INTERFACING

Microprocessor interfacing to the AD5724/AD5734/AD5754 is via a serial bus that uses standard protocol compatible with microcontrollers and DSP processors. The communications channel is a 3-wire (minimum) interface consisting of a clock signal, a data signal, and a synchronization signal. The AD5724/AD5734/AD5754 require a 24-bit data-word with data valid on the falling edge of SCLK.

For all interfaces, the DAC output update can be initiated automatically when all the data is clocked in, or it can be performed under the control of $\overline{\text{LDAC}}$. The contents of the registers can be read using the readback function.

### *AD5724/AD5734/AD5754 to Blackfin® DSP Interface*

Figure 44 shows how the AD5724/AD5734/AD5754 can be interfaced to the Analog Devices Blackfin DSP. The Blackfin has an integrated SPI port that can be connected directly to the SPI pins of the AD5724/AD5734/AD5754 and the programmable I/O pins that can be used to set the state of a digital input such as the $\overline{\text{LDAC}}$ pin.

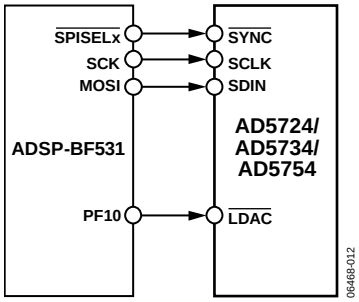


*Figure 44. AD5724/AD5734/AD5754 to Blackfin Interface*

**Table 28. Some Precision References Recommended for Use with the AD5724/AD5734/AD5754**

| Part No. | Initial Accuracy (mV max) | Long-Term Drift (ppm typ) | Temp Drift (ppm/°C max) | 0.1 Hz to 10 Hz Noise (µV p-p typ) |
|---|---|---|---|---|
| ADR431 | ±1 | 40 | 3 | 3.5 |
| ADR421 | ±1 | 50 | 3 | 1.75 |
| ADR03 | ±2.5 | 50 | 3 | 6 |
| ADR291 | ±2 | 50 | 8 | 8 |
| AD780 | ±1 | 20 | 3 | 4 |

# OUTLINE DIMENSIONS

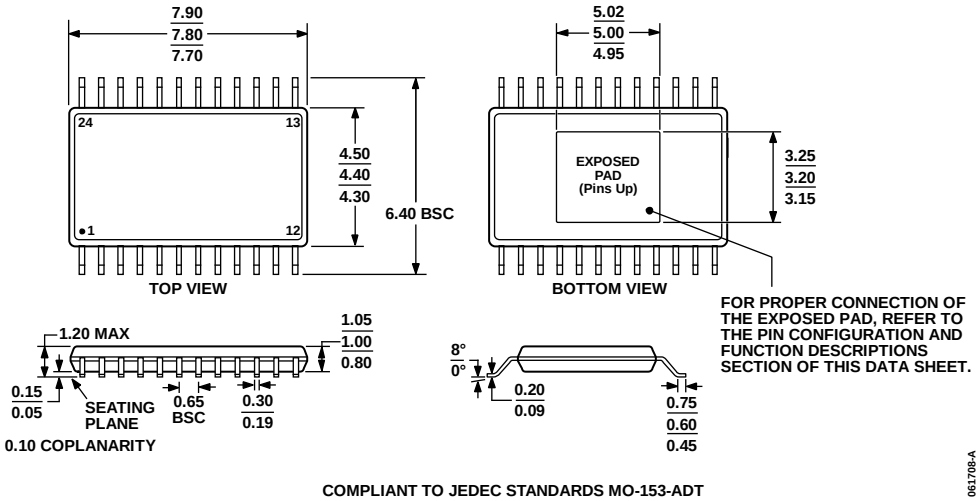


*Figure 45. 24-Lead Thin Shrink Small Outline Package, Exposed Pad [TSSOP_EP] (RE-24)*
*Dimensions shown in millimeters*

## ORDERING GUIDE

| Model[1] | Resolution (Bits) | Temperature Range | TUE | INL | Package Description | Package Option |
|---|---|---|---|---|---|---|
| AD5724AREZ | 12 | −40°C to +85°C | 0.3% FSR | ±1 LSB | 24-Lead TSSOP_EP | RE-24 |
| AD5724AREZ-REEL7 | 12 | −40°C to +85°C | 0.3% FSR | ±1 LSB | 24-Lead TSSOP_EP | RE-24 |
| AD5734AREZ | 14 | −40°C to +85°C | 0.3% FSR | ±4 LSB | 24-Lead TSSOP_EP | RE-24 |
| AD5734AREZ-REEL7 | 14 | −40°C to +85°C | 0.3% FSR | ±4 LSB | 24-Lead TSSOP_EP | RE-24 |
| AD5754AREZ | 16 | −40°C to +85°C | 0.3% FSR | ±16 LSB | 24-Lead TSSOP_EP | RE-24 |
| AD5754AREZ-REEL7 | 16 | −40°C to +85°C | 0.3% FSR | ±16 LSB | 24-Lead TSSOP_EP | RE-24 |
| AD5754BREZ | 16 | −40°C to +85°C | 0.1% FSR | ±16 LSB | 24-Lead TSSOP_EP | RE-24 |
| AD5754BREZ-REEL7 | 16 | −40°C to +85°C | 0.1% FSR | ±16 LSB | 24-Lead TSSOP_EP | RE-24 |

[1] Z = RoHS Compliant Part.

# NOTES

# NOTES

©2008–2011 Analog Devices, Inc. All rights reserved. Trademarks and registered trademarks are the property of their respective owners.
D06468-0-7/11(D)