AT91SAM ARM-based Flash MCU

SAM3S Series

Summary

Features

- Core
  - ARM® Cortex®-M3 revision 2.0 running at up to 64 MHz
  - Memory Protection Unit (MPU)
  - Thumb®-2 instruction set
- Pin-to-pin compatible with AT91SAM7S legacy products (48- and 64-pin versions)
- Memories
  - From 64 to 256 Kbytes embedded Flash, 128-bit wide access, memory accelerator, single plane
  - From 16 to 48 Kbytes embedded SRAM
  - 16 Kbytes ROM with embedded bootloader routines (UART, USB) and IAP routines
  - 8-bit Static Memory Controller (SMC): SRAM, PSRAM, NOR and NAND Flash support
  - Memory Protection Unit (MPU)
- System
  - Embedded voltage regulator for single supply operation
  - Power-on-Reset (POR), Brown-out Detector (BOD) and Watchdog for safe operation
  - Quartz or ceramic resonator oscillators: 3 to 20 MHz main power with Failure Detection and optional low power 32.768 kHz for RTC or device clock
  - High precision 8/12 MHz factory trimmed internal RC oscillator with 4 MHz default frequency for device startup. In-application trimming access for frequency adjustment
  - Slow Clock Internal RC oscillator as permanent low-power mode device clock
  - Two PLLs up to 130 MHz for device clock and for USB
  - Temperature Sensor
  - Up to 22 peripheral DMA (PDC) channels
- Low Power Modes
  - Sleep and Backup modes, down to 3 µA in Backup mode
  - Ultra low power RTC
- Peripherals
  - USB 2.0 Device: 12 Mbps, 2668 byte FIFO, up to 8 bidirectional Endpoints. On-Chip Transceiver
  - Up to 2 USARTs with ISO7816, IrDA®, RS-485, SPI, Manchester and Modem Mode
  - Two 2-wire UARTs
  - Up to 2 Two Wire Interface (I2C compatible), 1 SPI, 1 Serial Synchronous Controller (I2S), 1 High Speed Multimedia Card Interface (SDIO/SD Card/MMC)
  - Up to 6 Three-Channel 16-bit Timer/Counter with capture, waveform, compare and PWM mode. Quadrature Decoder Logic and 2-bit Gray Up/Down Counter for Stepper Motor
  - 4-channel 16-bit PWM with Complementary Output, Fault Input, 12-bit Dead Time Generator Counter for Motor Control
  - 32-bit Real-time Timer and RTC with calendar and alarm features
  - Up to 15-channel, 1Msps ADC with differential input mode and programmable gain stage
  - One 2-channel 12-bit 1Msps DAC
  - One Analog Comparator with flexible input selection, Selectable input hysteresis
  - 32-bit Cyclic Redundancy Check Calculation Unit (CRCCU)
- I/O
  - Up to 79 I/O lines with external interrupt capability (edge or level sensitivity), debouncing, glitch filtering and on-die Series Resistor Termination
  - Three 32-bit Parallel Input/Output Controllers, Peripheral DMA assisted Parallel Capture Mode
- Packages
  - 100-lead LQFP, 14 x 14 mm, pitch 0.5 mm/100-ball LFBGA, 9 x 9 mm, pitch 0.8 mm
  - 64-lead LQFP, 10 x 10 mm, pitch 0.5 mm/64-pad QFN 9x9 mm, pitch 0.5 mm
  - 48-lead LQFP, 7 x 7 mm, pitch 0.5 mm/48-pad QFN 7x7 mm, pitch 0.5 mm

NOTE: This is a summary document. The complete document is available on the Atmel website at www.atmel.com.

6500CS–ATARM–24-Jan-11

1. SAM3S Description

Atmel's SAM3S series is a member of a family of Flash microcontrollers based on the high performance 32-bit ARM Cortex-M3 RISC processor. It operates at a maximum speed of 64 MHz and features up to 256 Kbytes of Flash and up to 48 Kbytes of SRAM. The peripheral set includes a Full Speed USB Device port with embedded transceiver, a High Speed MCI for SDIO/SD/MMC, an External Bus Interface featuring a Static Memory Controller providing connection to SRAM, PSRAM, NOR Flash, LCD Module and NAND Flash, 2x USARTs, 2x UARTs, 2x TWIs, 3x SPI, an I2S, as well as 1 PWM timer, 6x general-purpose 16-bit timers, an RTC, an ADC, a 12-bit DAC and an analog comparator.

The SAM3S series is ready for capacitive touch thanks to the QTouch library, offering an easy way to implement buttons, wheels and sliders

The SAM3S device is a medium range general purpose microcontroller with the best ratio in terms of reduced power consumption, processing power and peripheral set. This enables the SAM3S to sustain a wide range of applications including consumer, industrial control, and PC peripherals.

It operates from 1.62V to 3.6V and is available in 48-, 64- and 100-pin QFP, 48- and 64-pin QFN, and 100-pin BGA packages.

The SAM3S series is the ideal migration path from the SAM7S series for applications that require more performance. The SAM3S series is pin-to-pin compatible with the SAM7Sseries.

1.1 Configuration Summary

The SAM3S series devices differ in memory size, package and features list. Table 1-1 below summarizes the configurations of the device family

Table 1-1. Configuration Summary

Device	Flash	SRAM	Timer Counter Channels	GPIOs	UART/ USARTs	ADC	12-bit DAC Output	External Bus Interface	HSMCI	Package
SAM3S4C	256 Kbytes single plane	48 Kbytes	6	79	2/2[(1)]	16 ch.	2	8-bit data, 4 chip selects, 24-bit address	1 port 4 bits	LQFP100 BGA100
SAM3S4B	256 Kbytes single plane	48 Kbytes	3	47	2/2	10 ch.	2	-	1 port 4 bits	LQFP64 QFN 64
SAM3S4A	256 Kbytes single plane	48 Kbytes	3	34	2/1	8 ch.	-	-	-	LQFP48 QFN 48
SAM3S2C	128 Kbytes single plane	32 Kbytes	6	79	2/2[(1)]	16 ch.	2	8-bit data, 4 chip selects, 24-bit address	1 port 4 bits	LQFP100 BGA100
SAM3S2B	128 Kbytes single plane	32 Kbytes	3	47	2/2	10 ch.	2	-	1 port 4 bits	LQFP64 QFN 64
SAM3S2A	128 Kbytes single plane	32 Kbytes	3	34	2/1	8 ch.	-	-	-	LQFP48 QFN 48
SAM3S1C	64 Kbytes single plane	16 Kbytes	6	79	2/2[(1)]	16 ch.	2	8-bit data, 4 chip selects, 24-bit address	1 port 4 bits	LQFP100 BGA100
SAM3S1B	64 Kbytes single plane	16 Kbytes	3	47	2/2	10 ch.	2	-	1 port 4 bits	LQFP64 QFN 64
SAM3S1A	64 Kbytes single plane	16 Kbytes	3	34	2/1	8 ch.	-	-	-	LQFP48 QFN 48

Note: 1. Full Modem support on USART1.

2. SAM3S Block Diagram

Figure 2-1. SAM3S 100-pin Version Block Diagram

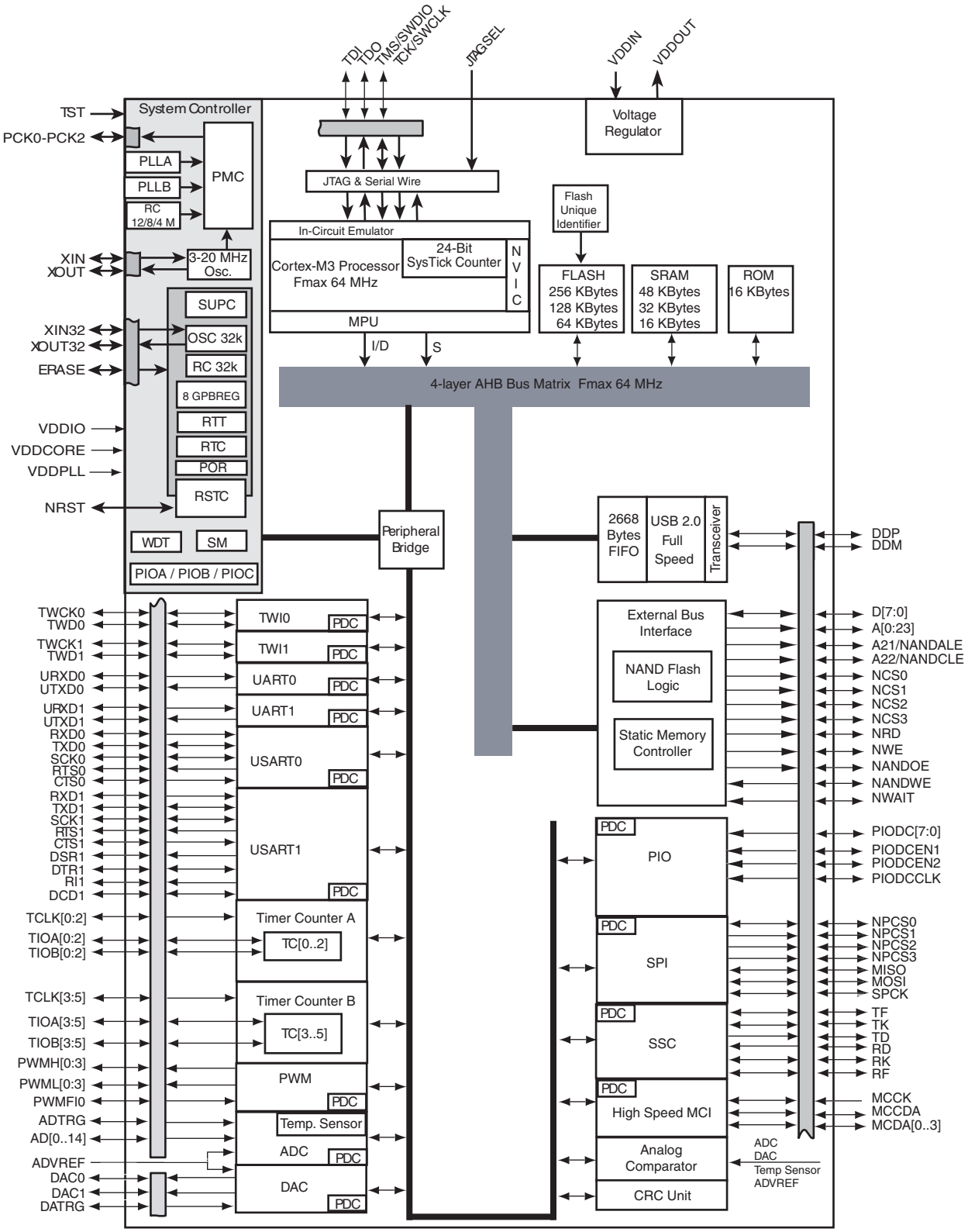

Figure 2-2. SAM3S 64-pin Version Block Diagram

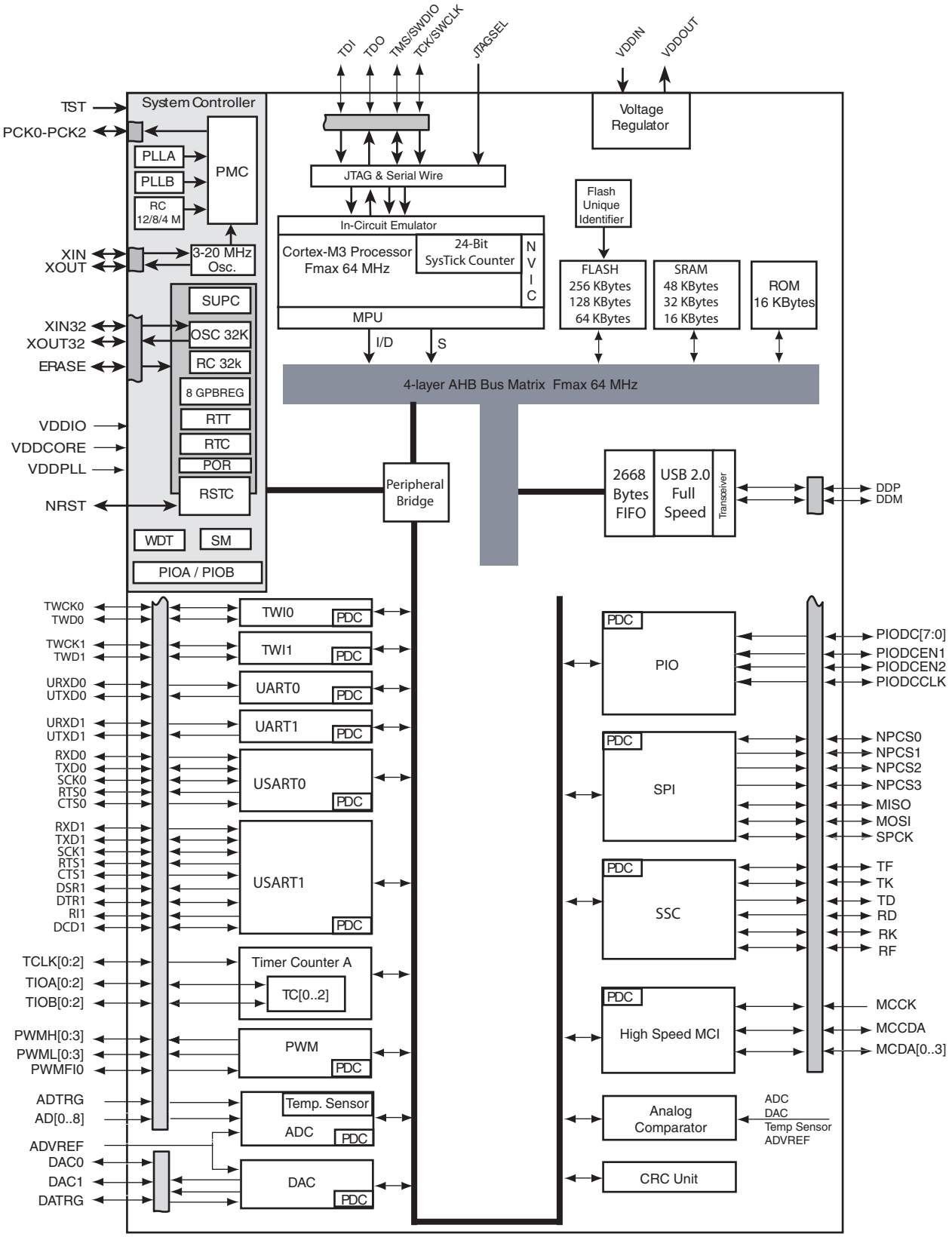

Figure 2-3. SAM3S 48-pin Version Block Diagram

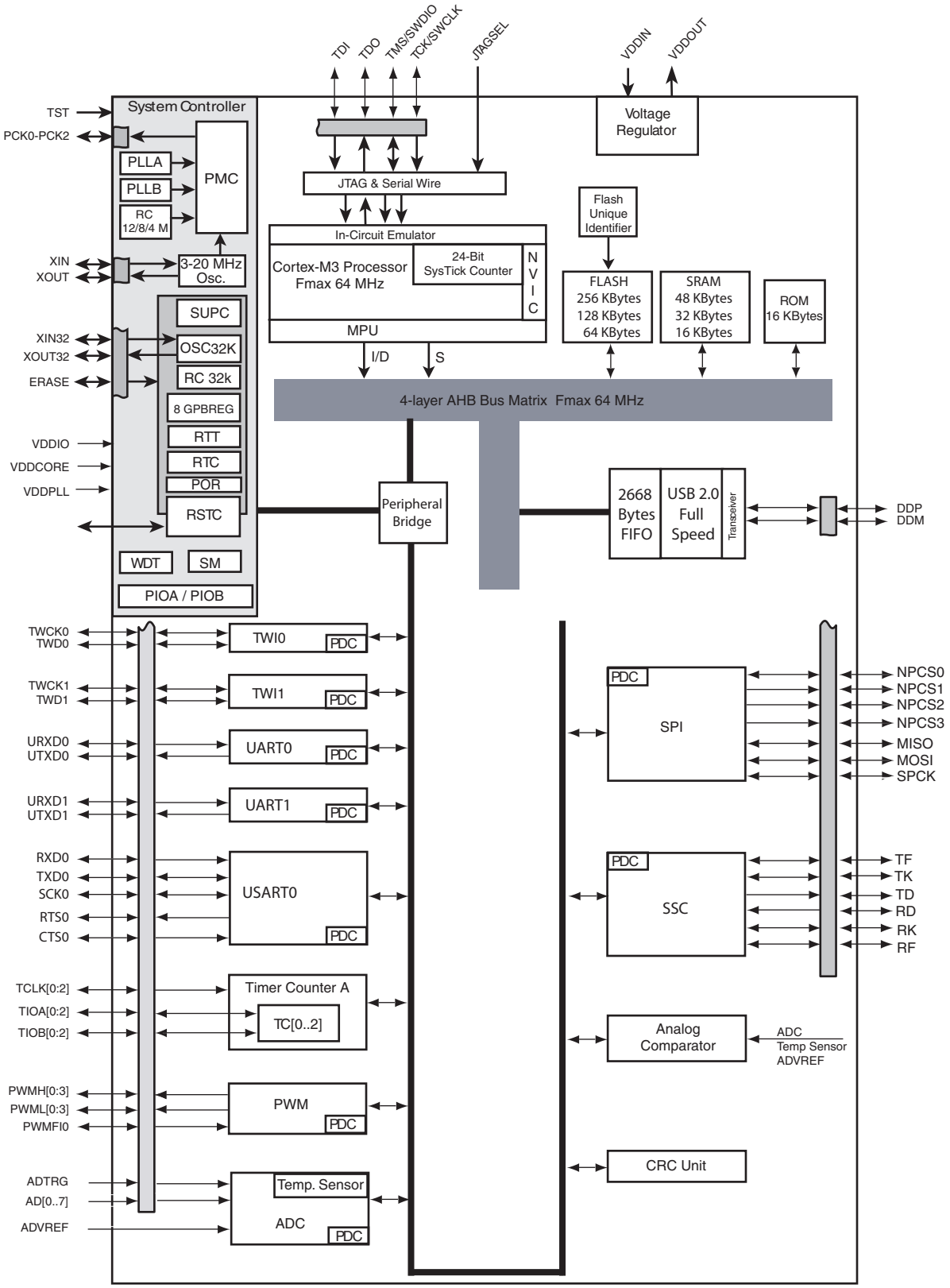

3. Signal Description

Table 3-1 gives details on the signal names classified by peripheral.

Table 3-1. Signal Description List

Signal Name	Function	Type	Active Level	Voltage reference	Comments
Power Supplies					
VDDIO	Peripherals I/O Lines and USB transceiver Power Supply	Power			1.62V to 3.6V
VDDIN	Voltage Regulator Input, ADC, DAC and Analog Comparator Power Supply	Power			1.8V to 3.6V[4]
VDDOUT	Voltage Regulator Output	Power			1.8V Output
VDDPLL	Oscillator and PLL Power Supply	Power			1.62 V to 1.95V
VDDCORE	Power the core, the embedded memories and the peripherals	Power			1.62V to 1.95V
GND	Ground	Ground			
Clocks, Oscillators and PLLs					
XIN	Main Oscillator Input	Input		VDDIO	Reset State: - PIO Input - Internal Pull-up disabled - Schmitt Trigger enabled[1]
XOUT	Main Oscillator Output	Output			
XIN32	Slow Clock Oscillator Input	Input			
XOUT32	Slow Clock Oscillator Output	Output			
PCK0 - PCK2	Programmable Clock Output	Output			Reset State: - PIO Input - Internal Pull-up enabled - Schmitt Trigger enabled[1]
Serial Wire/JTAG Debug Port - SWJ-DP					
TCK/SWCLK	Test Clock/Serial Wire Clock	Input		VDDIO	Reset State: - SWJ-DP Mode - Internal pull-up disabled - Schmitt Trigger enabled[1]
TDI	Test Data In	Input			
TDO/TRACESWO	Test Data Out / Trace Asynchronous Data Out	Output			
TMS/SWDIO	Test Mode Select /Serial Wire Input/Output	Input / I/O			
JTAGSEL	JTAG Selection	Input	High		Permanent Internal pull-down
Flash Memory					
ERASE	Flash and NVM Configuration Bits Erase Command	Input	High	VDDIO	Reset State: - Erase Input - Internal pull-down enabled - Schmitt Trigger enabled[1]
Reset/Test					
NRST	Synchronous Microcontroller Reset	I/O	Low	VDDIO	Permanent Internal pull-up
TST	Test Select	Input			Permanent Internal pull-down

Table 3-1. Signal Description List (Continued)

Signal Name	Function	Type	Active Level	Voltage reference	Comments
Universal Asynchronous Receiver Transmitter - UARTx					
URXDx	UART Receive Data	Input			
UTXDx	UART Transmit Data	Output			
PIO Controller - PIOA - PIOB - PIOC					
PA0 - PA31	Parallel IO Controller A	I/O		VDDIO	Reset State: - PIO or System IOs[2] - Internal pull-up enabled - Schmitt Trigger enabled[1]
PB0 - PB14	Parallel IO Controller B	I/O			
PC0 - PC31	Parallel IO Controller C	I/O			
PIO Controller - Parallel Capture Mode (PIOA Only)					
PIODC0-PIODC7	Parallel Capture Mode Data	Input		VDDIO	
PIODCCLK	Parallel Capture Mode Clock	Input			
PIODCEN1-2	Parallel Capture Mode Enable	Input			
External Bus Interface					
D0 - D7	Data Bus	I/O			
A0 - A23	Address Bus	Output			
NWAIT	External Wait Signal	Input	Low		
Static Memory Controller - SMC					
NCS0 - NCS3	Chip Select Lines	Output	Low		
NRD	Read Signal	Output	Low		
NWE	Write Enable	Output	Low		
NAND Flash Logic					
NANDOE	NAND Flash Output Enable	Output	Low		
NANDWE	NAND Flash Write Enable	Output	Low		
High Speed Multimedia Card Interface - HSMCI					
MCCK	Multimedia Card Clock	I/O			
MCCDA	Multimedia Card Slot A Command	I/O			
MCDA0 - MCDA3	Multimedia Card Slot A Data	I/O			
Universal Synchronous Asynchronous Receiver Transmitter USARTx					
SCKx	USARTx Serial Clock	I/O			
TXDx	USARTx Transmit Data	I/O			
RXDx	USARTx Receive Data	Input			
RTSx	USARTx Request To Send	Output			
CTSx	USARTx Clear To Send	Input			
DTR1	USART1 Data Terminal Ready	I/O			
DSR1	USART1 Data Set Ready	Input			
DCD1	USART1 Data Carrier Detect	Input			
RI1	USART1 Ring Indicator	Input			

Table 3-1. Signal Description List (Continued)

Signal Name	Function	Type	Active Level	Voltage reference	Comments
Synchronous Serial Controller - SSC					
TD	SSC Transmit Data	Output			
RD	SSC Receive Data	Input			
TK	SSC Transmit Clock	I/O			
RK	SSC Receive Clock	I/O			
TF	SSC Transmit Frame Sync	I/O			
RF	SSC Receive Frame Sync	I/O			
Timer/Counter - TC					
TCLKx	TC Channel x External Clock Input	Input			
TIOAx	TC Channel x I/O Line A	I/O			
TIOBx	TC Channel x I/O Line B	I/O			
Pulse Width Modulation Controller- PWMC					
PWMHx	PWM Waveform Output High for channel x	Output			
PWMLx	PWM Waveform Output Low for channel x	Output			only output in complementary mode when dead time insertion is enabled
PWMFI0	**PWM Fault Input**	Input			
Serial Peripheral Interface - SPI					
MISO	Master In Slave Out	I/O			
MOSI	Master Out Slave In	I/O			
SPCK	SPI Serial Clock	I/O			
SPI_NPCS0	SPI Peripheral Chip Select 0	I/O	Low		
SPI_NPCS1 - SPI_NPCS3	SPI Peripheral Chip Select	Output	Low		
Two-Wire Interface- TWI					
TWDx	TWIx Two-wire Serial Data	I/O			
TWCKx	TWIx Two-wire Serial Clock	I/O			
Analog					
ADVREF	ADC, DAC and Analog Comparator Reference	Analog			
Analog-to-Digital Converter - ADC					
AD0 - AD14	Analog Inputs	Analog, Digital			
ADTRG	ADC Trigger	Input		VDDIO	
12-bit Digital-to-Analog Converter - DAC					
DAC0 - DAC1	Analog output	Analog, Digital			
DACTRG	DAC Trigger	Input		VDDIO	

Table 3-1. Signal Description List (Continued)

Signal Name	Function	Type	Active Level	Voltage reference	Comments
Fast Flash Programming Interface - FFPI					
PGMEN0-PGMEN2	Programming Enabling	Input		VDDIO	
PGMM0-PGMM3	Programming Mode	Input		VDDIO	
PGMD0-PGMD15	Programming Data	I/O			
PGMRDY	Programming Ready	Output	High		
PGMNVALID	Data Direction	Output	Low		
PGMNOE	Programming Read	Input	Low		
PGMCK	Programming Clock	Input			
PGMNCMD	Programming Command	Input	Low		
USB Full Speed Device					
DDM	USB Full Speed Data -	Analog, Digital		VDDIO	Reset State: - USB Mode - Internal Pull-down[3]
DDP	USB Full Speed Data +				

Notes:
1. Schmitt Triggers can be disabled through PIO registers.
2. Some PIO lines are shared with System IOs.
3. Refer to the USB sub section in the product Electrical Characteristics Section for Pull-down value in USB Mode.
4. See Section 5.3 “Typical Powering Schematics” for restriction on voltage range of Analog Cells.

4. Package and Pinout

4.1 SAM3S4/2/1C Package and Pinout

Figure 4-2 shows the orientation of the 100-ball LFBGA Package

4.1.1 100-lead LQFP Package Outline

Figure 4-1. Orientation of the 100-lead LQFP Package

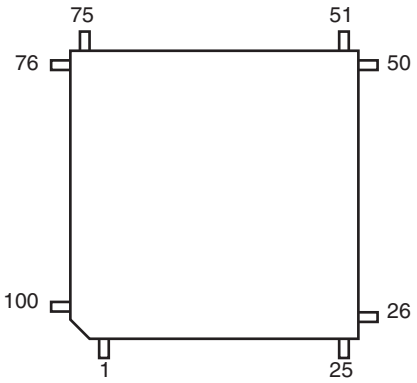

4.1.2 100-ball LFBGA Package Outline

The 100-Ball LFBGA package has a 0.8 mm ball pitch and respects Green Standards. Its dimensions are 9 x 9 x 1.1 mm.

Figure 4-2. Orientation of the 100-BALL LFBGA Package

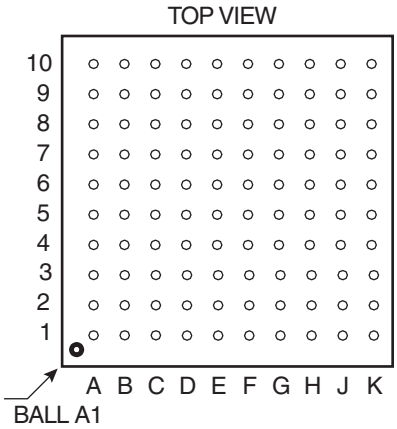

4.1.3 100-Lead LQFP Pinout

Table 4-1. 100-lead LQFP SAM3S4/2/1C Pinout

1	ADVREF	26	GND	51	TDI/PB4	76	TDO/TRACESWO/PB5
2	GND	27	VDDIO	52	PA6/PGMNOE	77	JTAGSEL
3	PB0/AD4	28	PA16/PGMD4	53	PA5/PGMRDY	78	PC18
4	PC29/AD13	29	PC7	54	PC28	79	TMS/SWDIO/PB6
5	PB1/AD5	30	PA15/PGMD3	55	PA4/PGMNCMD	80	PC19
6	PC30/AD14	31	PA14/PGMD2	56	VDDCORE	81	PA31
7	PB2/AD6	32	PC6	57	PA27/PGMD15	82	PC20
8	PC31	33	PA13/PGMD1	58	PC8	83	TCK/SWCLK/PB7
9	PB3/AD7	34	PA24/PGMD12	59	PA28	84	PC21
10	VDDIN	35	PC5	60	NRST	85	VDDCORE
11	VDDOUT	36	VDDCORE	61	TST	86	PC22
12	PA17/PGMD5/AD0	37	PC4	62	PC9	87	ERASE/PB12
13	PC26	38	PA25/PGMD13	63	PA29	88	DDM/PB10
14	PA18/PGMD6/AD1	39	PA26/PGMD14	64	PA30	89	DDP/PB11
15	PA21/PGMD9/AD8	40	PC3	65	PC10	90	PC23
16	VDDCORE	41	PA12/PGMD0	66	PA3	91	VDDIO
17	PC27	42	PA11/PGMM3	67	PA2/PGMEN2	92	PC24
18	PA19/PGMD7/AD2	43	PC2	68	PC11	93	PB13/DAC0
19	PC15/AD11	44	PA10/PGMM2	69	VDDIO	94	PC25
20	PA22/PGMD10/AD9	45	GND	70	GND	95	GND
21	PC13/AD10	46	PA9/PGMM1	71	PC14	96	PB8/XOUT
22	PA23/PGMD1	47	PC1	72	PA1/PGMEN1	97	PB9/*PGMCK/XIN*
23	PC12/AD12	48	PA8/XOUT32/PGMM0	73	PC16	98	VDDIO
24	PA20/PGMD8/AD3	49	PA7/XIN32/PGMNVALID	74	PA0/PGMEN0	99	PB14/DAC1
25	PC0	50	VDDIO	75	PC17	100	VDDPLL

4.1.4 100-ball LFBGA Pinout

Table 4-2. 100-ball LFBGA SAM3S4/2/1C Pinout

A1	PB1/AD5	C6	TCK/SWCLK/PB7	F1	PA18/PGMD6/AD1	H6	PC4
A2	PC29	C7	PC16	F2	PC26	H7	PA11/PGMM3
A3	VDDIO	C8	PA1/PGMEN1	F3	VDDOUT	H8	PC1
A4	PB9/PGMCK/XIN	C9	PC17	F4	GND	H9	PA6/PGMNOE
A5	PB8/XOUT	C10	PA0/PGMEN0	F5	VDDIO	H10	TDI/PB4
A6	PB13/DAC0	D1	PB3/AD7	F6	PA27/PGMD15	J1	PC15/AD11
A7	DDP/PB11	D2	PB0/AD4	F7	PC8	J2	PC0
A8	DDM/PB10	D3	PC24	F8	PA28	J3	PA16/PGMD4
A9	TMS/SWDIO/PB6	D4	PC22	F9	TST	J4	PC6
A10	JTAGSEL	D5	GND	F10	PC9	J5	PA24/PGMD12
B1	PC30	D6	GND	G1	PA21/PGMD9/AD8	J6	PA25/PGMD13
B2	ADVREF	D7	VDDCORE	G2	PC27	J7	PA10/PGMM2
B3	GNDANA	D8	PA2/PGMEN2	G3	PA15/PGMD3	J8	GND
B4	PB14/DAC1	D9	PC11	G4	VDDCORE	J9	VDDCORE
B5	PC21	D10	PC14	G5	VDDCORE	J10	VDDIO
B6	PC20	E1	PA17/PGMD5/AD0	G6	PA26/PGMD14	K1	PA22/PGMD10/AD9
B7	PA31	E2	PC31	G7	PA12/PGMD0	K2	PC13/AD10
B8	PC19	E3	VDDIN	G8	PC28	K3	PC12/AD12
B9	PC18	E4	GND	G9	PA4/PGMNCMD	K4	PA20/PGMD8/AD3
B10	TDO/TRACESWO/ PB5	E5	GND	G10	PA5/PGMRDY	K5	PC5
C1	PB2/AD6	E6	NRST	H1	PA19/PGMD7/AD2	K6	PC3
C2	VDDPLL	E7	PA29/AD13	H2	PA23/PGMD11	K7	PC2
C3	PC25	E8	PA30/AD14	H3	PC7	K8	PA9/PGMM1
C4	PC23	E9	PC10	H4	PA14/PGMD2	K9	PA8/XOUT32/PGMM0
C5	ERASE/PB12	E10	PA3	H5	PA13/PGMD1	K10	PA7/XIN32/ PGMNVALID

4.2 SAM3S4/2/1B Package and Pinout

Figure 4-3. Orientation of the 64-pad QFN Package

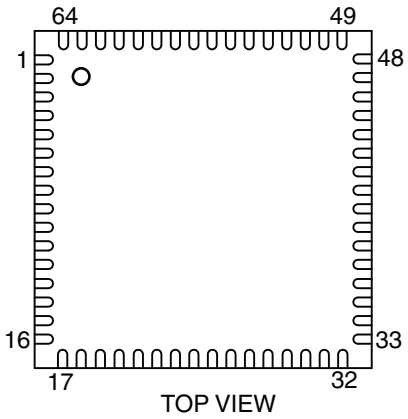

Figure 4-4. Orientation of the 64-lead LQFP Package

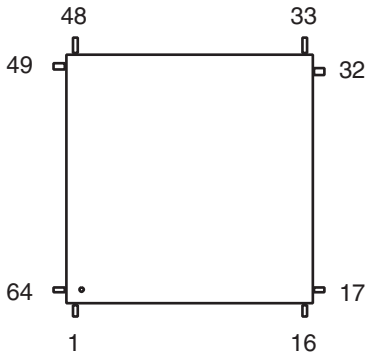

4.2.1 64-Lead LQFP and QFN Pinout

64-pin version SAM3S devices are pin-to-pin compatible with AT91SAM7S legacy products. Furthermore, SAM3S products have new functionalities shown in italic in Table 4-3.

Table 4-3. 64-pin SAM3S4/2/1B Pinout

1	ADVREF	17	GND	33	TDI/PB4	49	TDO/TRACESWO/PB5
2	GND	18	VDDIO	34	PA6/PGMNOE	50	JTAGSEL
3	PB0/AD4	19	PA16/PGMD4	35	PA5/PGMRDY	51	TMS/SWDIO/PB6
4	PB1/AD5	20	PA15/PGMD3	36	PA4/PGMNCMD	52	PA31
5	PB2/AD6	21	PA14/PGMD2	37	PA27/PGMD15	53	TCK/SWCLK/PB7
6	PB3/AD7	22	PA13/PGMD1	38	PA28	54	VDDCORE
7	VDDIN	23	PA24/PGMD12	39	NRST	55	ERASE/PB12
8	VDDOUT	24	VDDCORE	40	TST	56	DDM/PB10
9	PA17/PGMD5/ AD*0*	25	PA25/PGMD13	41	PA29	57	DDP/PB11
10	PA18/PGMD6/ AD1	26	PA26/PGMD14	42	PA30	58	VDDIO
11	PA21/PGMD9/ AD8	27	PA12/PGMD0	43	PA3	59	PB13/DAC0
12	VDDCORE	28	PA11/PGMM3	44	PA2/PGMEN2	60	GND
13	PA19/PGMD7/ AD2	29	PA10/PGMM2	45	VDDIO	61	XOUT/PB8
14	PA22/PGMD10/ AD9	30	PA9/PGMM1	46	GND	62	XIN/PGMCK/PB9
15	PA23/PGMD11	31	PA8/*XOUT32/* PGMM0	47	PA1/PGMEN1	63	PB14/DAC1
16	PA20/PGMD8/ AD3	32	PA7/*XIN32/* PGMNVALID	48	PA0/PGMEN0	64	VDDPLL

Note: The bottom pad of the QFN package must be connected to ground.

4.3 SAM3S4/2/1A Package and Pinout

Figure 4-5. Orientation of the 48-pad QFN Package

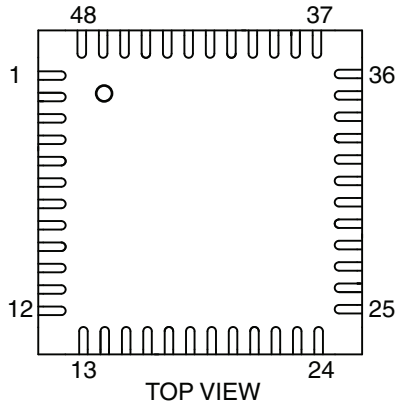

Figure 4-6. Orientation of the 48-lead LQFP Package

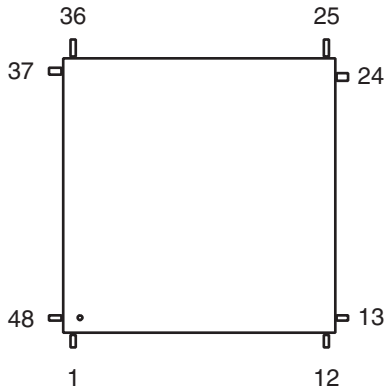

4.3.1 48-Lead LQFP and QFN Pinout

Table 4-4. 48-pin SAM3S4/2/1A Pinout

1	ADVREF	13	VDDIO	25	TDI/PB4	37	TDO/TRACESWO/ PB5
2	GND	14	PA16/PGMD4	26	PA6/PGMNOE	38	JTAGSEL
3	PB0/AD4	15	PA15/PGMD3	27	PA5/PGMRDY	39	TMS/SWDIO/PB6
4	PB1/AD5	16	PA14/PGMD2	28	PA4/PGMNCMD	40	TCK/SWCLK/PB7
5	PB2/AD6	17	PA13/PGMD1	29	NRST	41	VDDCORE
6	PB3/AD7	18	VDDCORE	30	TST	42	ERASE/PB12
7	VDDIN	19	PA12/PGMD0	31	PA3	43	DDM/PB10
8	VDDOUT	20	PA11/PGMM3	32	PA2/PGMEN2	44	DDP/PB11
9	PA17/PGMD5/ AD0	21	PA10/PGMM2	33	VDDIO	45	XOUT/PB8
10	PA18/PGMD6/ AD1	22	PA9/PGMM1	34	GND	46	XIN/PB9/PGMCK
11	PA19/PGMD7/ AD2	23	PA8/*XOUT32*/ PGMM0	35	PA1/PGMEN1	47	VDDIO
12	PA20/AD3	24	PA7/*XIN32*/ PGMNVALID	36	PA0/PGMEN0	48	VDDPLL

Note: The bottom pad of the QFN package must be connected to ground.

5. Power Considerations

5.1 Power Supplies

The SAM3S product has several types of power supply pins:

- VDDCORE pins: Power the core, the embedded memories and the peripherals; voltage ranges from 1.62V and 1.95V.
- VDDIO pins: Power the Peripherals I/O lines (Input/Output Buffers); USB transceiver; Backup part, 32kHz crystal oscillator and oscillator pads; ranges from 1.62V and 3.6V
- VDDIN pin: Voltage Regulator Input, ADC, DAC and Analog Comparator Power Supply; Voltage ranges from 1.8V to 3.6V
- VDDPLL pin: Powers the PLLA, PLLB, the Fast RC and the 3 to 20 MHz oscillator; voltage ranges from 1.62V and 1.95V.

5.2 Voltage Regulator

The SAM3S embeds a voltage regulator that is managed by the Supply Controller.

This internal regulator is intended to supply the internal core of SAM3S. It features two different operating modes:

- In Normal mode, the voltage regulator consumes less than 700 µA static current and draws 80 mA of output current. Internal adaptive biasing adjusts the regulator quiescent current depending on the required load current. In Wait Mode quiescent current is only 7 µA.

• In Backup mode, the voltage regulator consumes less than 1 µA while its output (VDDOUT) is driven internally to GND. The default output voltage is 1.80V and the start-up time to reach Normal mode is inferior to 100 µs.

For adequate input and output power supply decoupling/bypassing, refer to the Voltage Regulator section in the Electrical Characteristics section of the datasheet.

5.3 Typical Powering Schematics

The SAM3S supports a 1.62V-3.6V single supply mode. The internal regulator input connected to the source and its output feeds VDDCORE. Figure 5-1 shows the power schematics.

As VDDIN powers the voltage regulator, the ADC/DAC and the analog comparator, when the user does not want to use the embedded voltage regulator, it can be disabled by software via the SUPC (note that it is different from Backup mode).

Figure 5-1. Single Supply

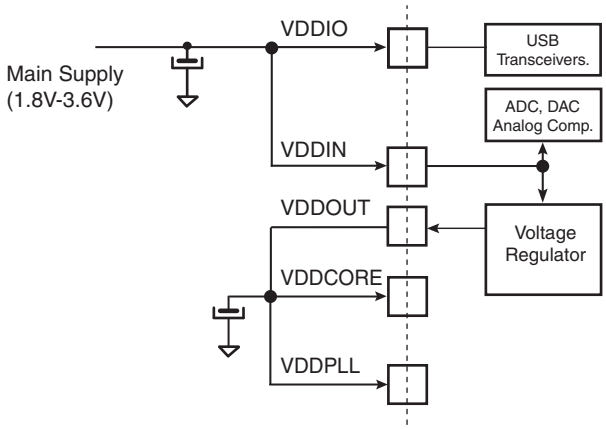

Note: Restrictions
With Main Supply < 2.0 V, USB and ADC/DAC and Analog comparator are not usable.
With Main Supply ≥ 2.0V and < 3V, USB is not usable.
With Main Supply ≥ 3V, all peripherals are usable.

Figure 5-2. Core Externally Supplied

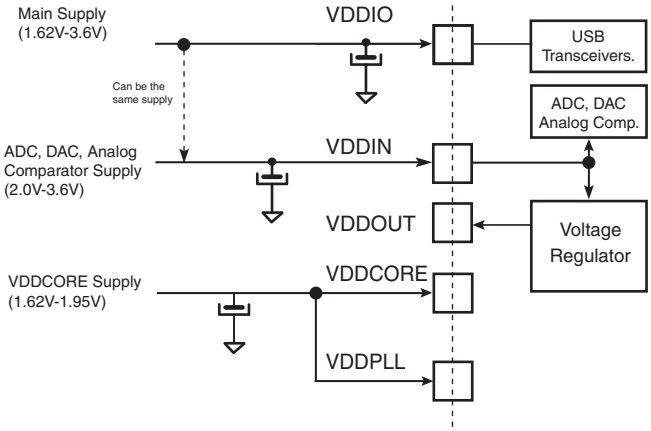

Note: Restrictions
With Main Supply < 2.0V, USB is not usable.
With VDDIN < 2.0V, ADC/DAC and Analog comparator are not usable.
With Main Supply ≥ 2.0V and < 3V, USB is not usable.
With Main Supply and VDDIN ≥ 3V, all peripherals are usable.

Figure 5-3 below provides an example of the powering scheme when using a backup battery. Since the PIO state is preserved when in backup mode, any free PIO line can be used to switch off the external regulator by driving the PIO line at low level (PIO is input, pull-up enabled after backup reset). External wake-up of the system can be from a push button or any signal. See Section 5.6 “Wake-up Sources” for further details.

Figure 5-3. Backup Battery

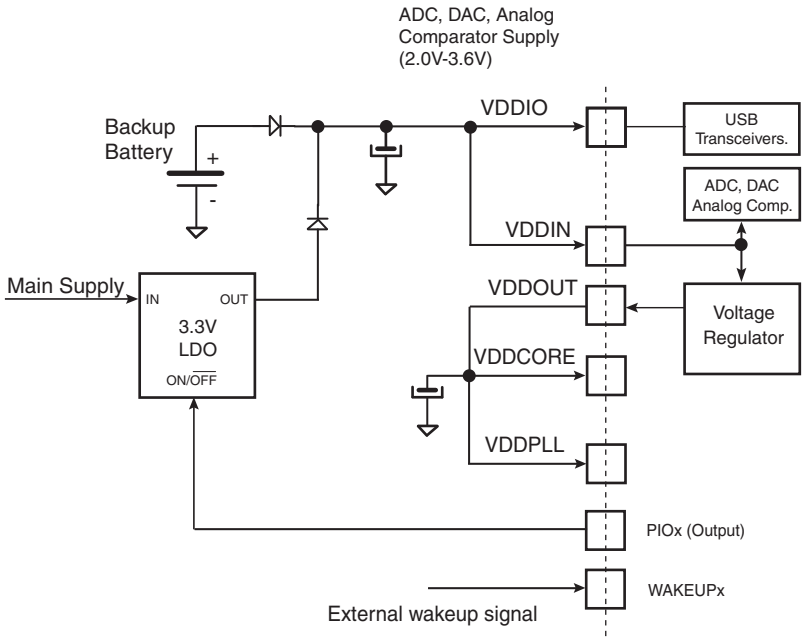

Note: The two diodes provide a "switchover circuit" (for illustration purpose) between the backup battery and the main supply when the system is put in backup mode.

5.4 Active Mode

Active mode is the normal running mode with the core clock running from the fast RC oscillator, the main crystal oscillator or the PLLA. The power management controller can be used to adapt the frequency and to disable the peripheral clocks.

5.5 Low Power Modes

The various low power modes of the SAM3S are described below:

5.5.1 Backup Mode

The purpose of backup mode is to achieve the lowest power consumption possible in a system which is performing periodic wake-ups to perform tasks but not requiring fast startup time (<0.1ms). Total current consumption is 3 µA typical.

The Supply Controller, zero-power power-on reset, RTT, RTC, Backup registers and 32 kHz oscillator (RC or crystal oscillator selected by software in the Supply Controller) are running. The regulator and the core supply are off.

Backup mode is based on the Cortex-M3 deepsleep mode with the voltage regulator disabled.

The SAM3S can be awakened from this mode through WUP0-15 pins, the supply monitor (SM), the RTT or RTC wake-up event.

Backup mode is entered by using WFE instructions with the SLEEPDEEP bit in the System Control Register of the Cortex-M3 set to 1. (See the Power management description in The ARM Cortex M3 Processor section of the product datasheet).

Exit from Backup mode happens if one of the following enable wake up events occurs:

- WKUPEN0-15 pins (level transition, configurable debouncing)
- Supply Monitor alarm
- RTC alarm
- RTT alarm

5.5.2 Wait Mode

The purpose of the wait mode is to achieve very low power consumption while maintaining the whole device in a powered state for a startup time of less than 10 µs. Current Consumption in Wait mode is typically 15 µA (total current consumption) if the internal voltage regulator is used or 8 µA if an external regulator is used.

In this mode, the clocks of the core, peripherals and memories are stopped. However, the core, peripherals and memories power supplies are still powered. From this mode, a fast start up is available.

This mode is entered via Wait for Event (WFE) instructions with LPM = 1 (Low Power Mode bit in PMC_FSMR). The Cortex-M3 is able to handle external events or internal events in order to wake-up the core (WFE). This is done by configuring the external lines WUP0-15 as fast startup wake-up pins (refer to Section 5.7 “Fast Startup”). RTC or RTT Alarm and USB wake-up events can be used to wake up the CPU (exit from WFE).

Entering Wait Mode:

- Select the 4/8/12 MHz fast RC oscillator as Main Clock
- Set the LPM bit in the PMC Fast Startup Mode Register (PMC_FSMR)
- Execute the Wait-For-Event (WFE) instruction of the processor

Note: Internal Main clock resynchronization cycles are necessary between the writing of MOSCRCEN bit and the effective entry in Wait mode. Depending on the user application, Waiting for MOSCRCEN bit to be cleared is recommended to ensure that the core will not execute undesired instructions.

5.5.3 Sleep Mode

The purpose of sleep mode is to optimize power consumption of the device versus response time. In this mode, only the core clock is stopped. The peripheral clocks can be enabled. The current consumption in this mode is application dependent.

This mode is entered via Wait for Interrupt (WFI) or Wait for Event (WFE) instructions with LPM = 0 in PMC_FSMR.

The processor can be woke up from an interrupt if WFI instruction of the Cortex M3 is used, or from an event if the WFE instruction is used to enter this mode.

5.5.4 Low Power Mode Summary Table

The modes detailed above are the main low power modes. Each part can be set to on or off separately and wake up sources can be individually configured. Table 5-1 below shows a summary of the configurations of the low power modes.

Table 5-1. Low Power Mode Configuration Summary

Mode	SUPC, 32 kHz Oscillator RTC RTT Backup Registers, POR (Backup Region)	Regulator	Core Memory Peripherals	Mode Entry	Potential Wake Up Sources	Core at Wake Up	PIO State while in Low Power Mode	PIO State at Wake Up	Consumption (2) (3)	Wake-up Time(1)
Backup Mode	ON	OFF	OFF (Not powered)	WFE +SLEEPDEEP bit = 1	WUP0-15 pins SM alarm RTC alarm RTT alarm	Reset	Previous state saved	PIOA & PIOB & PIOC Inputs with pull ups	3 µA typ(4)	< 0.1 ms
Wait Mode	ON	ON	Powered (Not clocked)	WFE +SLEEPDEEP bit = 0 +LPM bit = 1	Any Event from: Fast startup through WUP0-15 pins RTC alarm RTT alarm USB wake-up	Clocked back	Previous state saved	Unchanged	5 µA/15 µA (5)	< 10 µs
Sleep Mode	ON	ON	Powered(7) (Not clocked)	WFE or WFI +SLEEPDEEP bit = 0 +LPM bit = 0	Entry mode =WFI Interrupt Only; Entry mode =WFE Any Enabled Interrupt and/or Any Event from: Fast start-up through WUP0-15 pins RTC alarm RTT alarm USB wake-up	Clocked back	Previous state saved	Unchanged	(6)	(6)

Notes:
1. When considering wake-up time, the time required to start the PLL is not taken into account. Once started, the device works with the 4/8/12 MHz fast RC oscillator. The user has to add the PLL start-up time if it is needed in the system. The wake-up time is defined as the time taken for wake up until the first instruction is fetched.
2. The external loads on PIOs are not taken into account in the calculation.
3. Supply Monitor current consumption is not included.
4. Total Current consumption.
5. 5 µA on VDDCORE, 15 µA for total current consumption (using internal voltage regulator), 8 µA for total current consumption (without using internal voltage regulator).
6. Depends on MCK frequency.
7. In this mode the core is supplied and not clocked but some peripherals can be clocked.

5.6 Wake-up Sources

The wake-up events allow the device to exit the backup mode. When a wake-up event is detected, the Supply Controller performs a sequence which automatically reenables the core power supply and the SRAM power supply, if they are not already enabled.

Figure 5-4. Wake-up Source

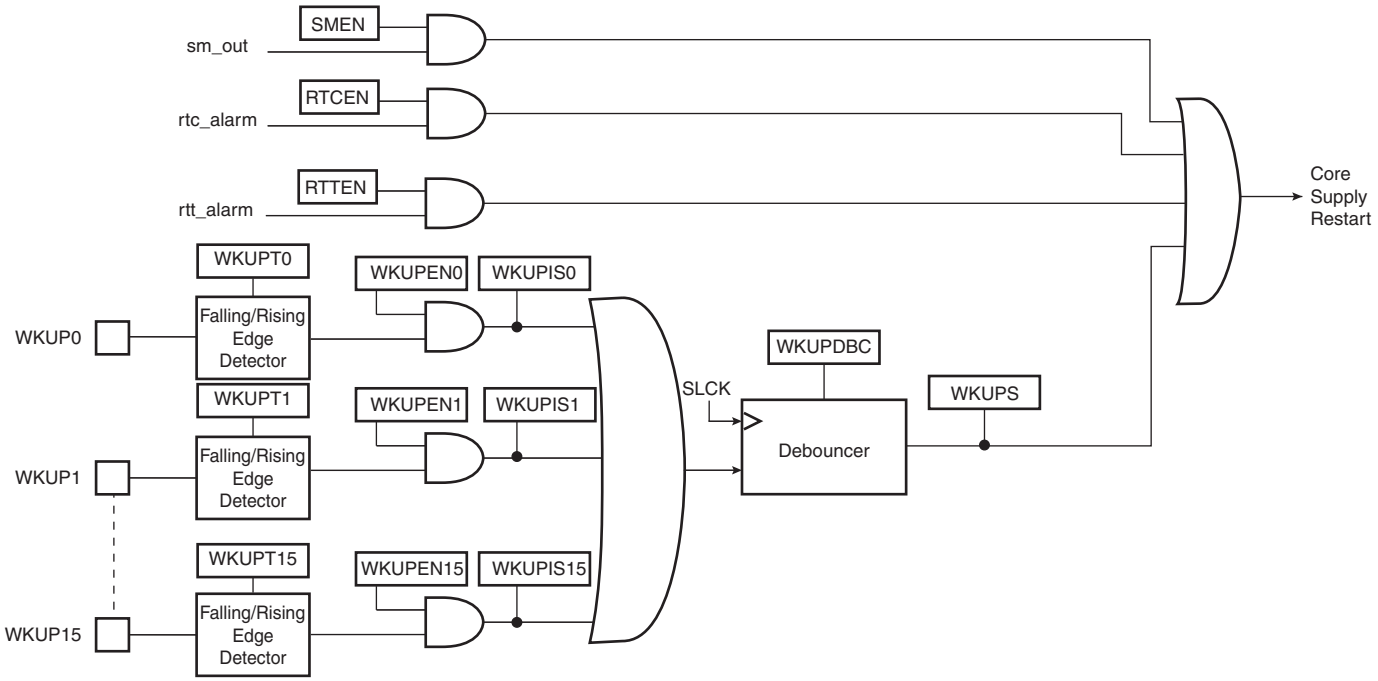

5.7 Fast Startup

The device allows the processor to restart in a few microseconds while the processor is in wait mode. A fast start up can occur upon detection of a low level on one of the 19 wake-up inputs (WKUP0 to 15 + SM + RTC + RTT).

The fast restart circuitry, as shown in Figure 5-5, is fully asynchronous and provides a fast start-up signal to the Power Management Controller. As soon as the fast start-up signal is asserted, the PMC automatically restarts the embedded 4/8/12 MHz fast RC oscillator, switches the master clock on this 4MHz clock and reenables the processor clock.

Figure 5-5. Fast Start-Up Circuitry

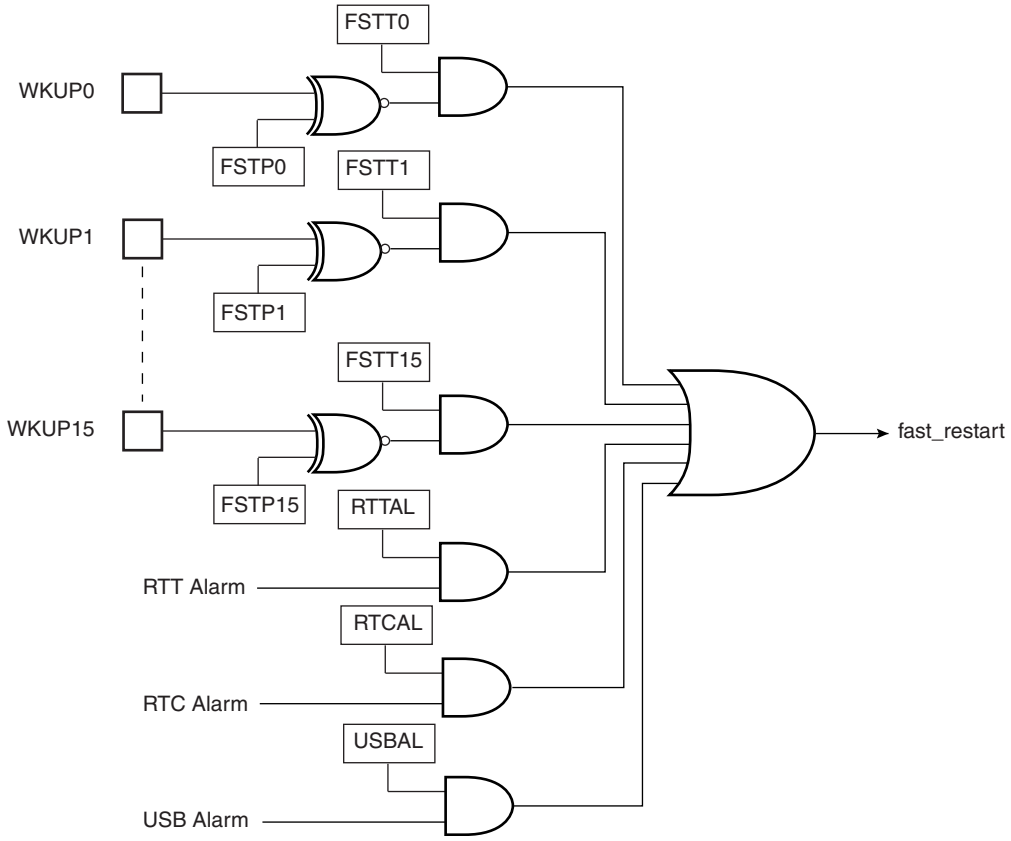

6. Input/Output Lines

The SAM3S has several kinds of input/output (I/O) lines such as general purpose I/Os (GPIO) and system I/Os. GPIOs can have alternate functionality due to multiplexing capabilities of the PIO controllers. The same PIO line can be used whether in IO mode or by the multiplexed peripheral. System I/Os include pins such as test pins, oscillators, erase or analog inputs.

6.1 General Purpose I/O Lines

GPIO Lines are managed by PIO Controllers. All I/Os have several input or output modes such as pull-up or pull-down, input Schmitt triggers, multi-drive (open-drain), glitch filters, debouncing or input change interrupt. Programming of these modes is performed independently for each I/O line through the PIO controller user interface. For more details, refer to the product PIO controller section.

The input output buffers of the PIO lines are supplied through VDDIO power supply rail.

The SAM3S embeds high speed pads able to handle up to 32 MHz for HSMCI (MCK/2), 45 MHz for SPI clock lines and 35 MHz on other lines. See AC Characteristics Section in the Electrical Characteristics Section of the datasheet for more details. Typical pull-up and pull-down value is 100 kΩ for all I/Os.

Each I/O line also embeds an ODT (On-Die Termination), see Figure 6-1. It consists of an internal series resistor termination scheme for impedance matching between the driver output (SAM3S) and the PCB trace impedance preventing signal reflection. The series resistor helps to reduce IOs switching current (di/dt) thereby reducing in turn, EMI. It also decreases overshoot and undershoot (ringing) due to inductance of interconnect between devices or between boards. In conclusion ODT helps diminish signal integrity issues.

Figure 6-1. On-Die Termination

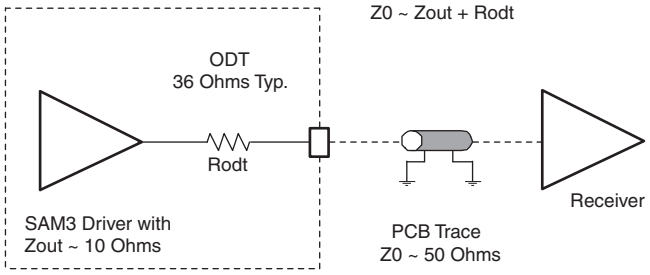

6.2 System I/O Lines

System I/O lines are pins used by oscillators, test mode, reset and JTAG to name but a few. Described below are the SAM3S system I/O lines shared with PIO lines:

These pins are software configurable as general purpose I/O or system pins. At startup the default function of these pins is always used.

Table 6-1. System I/O Configuration Pin List.

SYSTEM_IO bit number	Default function after reset	Other function	Constraints for normal start	Configuration
12	ERASE	PB12	Low Level at startup[1]	In Matrix User Interface Registers (Refer to the SystemIO Configuration Register in the Bus Matrix section of the product datasheet.)
10	DDM	PB10	-	
11	DDP	PB11	-	
7	TCK/SWCLK	PB7	-	
6	TMS/SWDIO	PB6	-	
5	TDO/TRACESWO	PB5	-	
4	TDI	PB4	-	
-	PA7	XIN32	-	See footnote [2] below
-	PA8	XOUT32	-	
-	PB9	XIN	-	See footnote [3] below
-	PB8	XOUT	-	

Notes:
1. If PB12 is used as PIO input in user applications, a low level must be ensured at startup to prevent Flash erase before the user application sets PB12 into PIO mode,
2. In the product Datasheet Refer to: Slow Clock Generator of the Supply Controller section.
3. In the product Datasheet Refer to: 3 to 20 MHZ Crystal Oscillator information in PMC section.

6.2.1 Serial Wire JTAG Debug Port (SWJ-DP) Pins

The SWJ-DP pins are TCK/SWCLK, TMS/SWDIO, TDO/SWO, TDI and commonly provided on a standard 20-pin JTAG connector defined by ARM. For more details about voltage reference and reset state, refer to Table 3-1 on page 6.

At startup, SWJ-DP pins are configured in SWJ-DP mode to allow connection with debugging probe. Please refer to the Debug and Test Section of the product datasheet.

SWJ-DP pins can be used as standard I/Os to provide users more general input/output pins when the debug port is not needed in the end application. Mode selection between SWJ-DP mode (System IO mode) and general IO mode is performed through the AHB Matrix Special Function Registers (MATRIX_SFR). Configuration of the pad for pull-up, triggers, debouncing and glitch filters is possible regardless of the mode.

The JTAGSEL pin is used to select the JTAG boundary scan when asserted at a high level. It integrates a permanent pull-down resistor of about 15 kΩ to GND, so that it can be left unconnected for normal operations.

By default, the JTAG Debug Port is active. If the debugger host wants to switch to the Serial Wire Debug Port, it must provide a dedicated JTAG sequence on TMS/SWDIO and TCK/SWCLK which disables the JTAG-DP and enables the SW-DP. When the Serial Wire Debug Port is active, TDO/TRACESWO can be used for trace.

The asynchronous TRACE output (TRACESWO) is multiplexed with TDO. So the asynchronous trace can only be used with SW-DP, not JTAG-DP. For more information about SW-DP and JTAG-DP switching, please refer to the Debug and Test Section.

6.3 Test Pin

The TST pin is used for JTAG Boundary Scan Manufacturing Test or Fast Flash programming mode of the SAM3S series. The TST pin integrates a permanent pull-down resistor of about 15 kΩ to GND, so that it can be left unconnected for normal operations. To enter fast programming mode, see the Fast Flash Programming Interface (FFPI) section. For more on the manufacturing and test mode, refer to the “Debug and Test” section of the product datasheet.

6.4 NRST Pin

The NRST pin is bidirectional. It is handled by the on-chip reset controller and can be driven low to provide a reset signal to the external components or asserted low externally to reset the microcontroller. It will reset the Core and the peripherals except the Backup region (RTC, RTT and Supply Controller). There is no constraint on the length of the reset pulse and the reset controller can guarantee a minimum pulse length. The NRST pin integrates a permanent pull-up resistor to VDDIO of about 100 kΩ. By default, the NRST pin is configured as an input.

6.5 ERASE Pin

The ERASE pin is used to reinitialize the Flash content (and some of its NVM bits) to an erased state (all bits read as logic level 1). It integrates a pull-down resistor of about 100 kΩ to GND, so that it can be left unconnected for normal operations.

This pin is debounced by SCLK to improve the glitch tolerance. When the ERASE pin is tied high during less than 100 ms, it is not taken into account. The pin must be tied high during more than 220 ms to perform a Flash erase operation.

The ERASE pin is a system I/O pin and can be used as a standard I/O. At startup, the ERASE pin is not configured as a PIO pin. If the ERASE pin is used as a standard I/O, startup level of this pin must be low to prevent unwanted erasing. Please refer to Section 11.2 “Peripheral Signal Multiplexing on I/O Lines” on page 43. Also, if the ERASE pin is used as a standard I/O output, asserting the pin to low does not erase the Flash.

7. Processor and Architecture

7.1 ARM Cortex-M3 Processor

- Version 2.0
- Thumb-2 (ISA) subset consisting of all base Thumb-2 instructions, 16-bit and 32-bit
- Harvard processor architecture enabling simultaneous instruction fetch with data load/store
- Three-stage pipeline
- Single cycle 32-bit multiply
- Hardware divide
- Thumb and Debug states
- Handler and Thread modes
- Low latency ISR entry and exit

7.2 APB/AHB bridge

The SAM3S product embeds one peripheral bridge:

The peripherals of the bridge are clocked by MCK.

7.3 Matrix Masters

The Bus Matrix of the SAM3S product manages 4 masters, which means that each master can perform an access concurrently with others, to an available slave.

Each master has its own decoder, which is defined specifically for each master. In order to simplify the addressing, all the masters have the same decodings.

Table 7-1. List of Bus Matrix Masters

Master 0	Cortex-M3 Instruction/Data
Master 1	Cortex-M3 System
Master 2	Peripheral DMA Controller (PDC)
Master 3	CRC Calculation Unit

7.4 Matrix Slaves

The Bus Matrix of the SAM3S product manages 5 slaves. Each slave has its own arbiter, allowing a different arbitration per slave.

Table 7-2. List of Bus Matrix Slaves

Slave 0	Internal SRAM
Slave 1	Internal ROM
Slave 2	Internal Flash
Slave 3	External Bus Interface
Slave 4	Peripheral Bridge

7.5 Master to Slave Access

All the Masters can normally access all the Slaves. However, some paths do not make sense, for example allowing access from the Cortex-M3 S Bus to the Internal ROM. Thus, these paths are forbidden or simply not wired and shown as “-” in the following table.

Table 7-3. SAM3S Master to Slave Access

Slaves	Masters	0	1	2	3
		Cortex-M3 I/D Bus	Cortex-M3 S Bus	PDC	CRCCU
0	Internal SRAM	-	X	X	X
1	Internal ROM	X	-	X	X
2	Internal Flash	X	-	-	X
3	External Bus Interface	-	X	X	X
4	Peripheral Bridge	-	X	X	-

7.6 Peripheral DMA Controller

- Handles data transfer between peripherals and memories
- Low bus arbitration overhead
  - One Master Clock cycle needed for a transfer from memory to peripheral
  - Two Master Clock cycles needed for a transfer from peripheral to memory
- Next Pointer management for reducing interrupt latency requirement

The Peripheral DMA Controller handles transfer requests from the channel according to the following priorities (Low to High priorities):

Table 7-4. Peripheral DMA Controller

Instance Name	Channel T/R	100 & 64 Pins	48 Pins
PWM	Transmit	x	x
TWI1	Transmit	x	x
TWI0	Transmit	x	x
UART1	Transmit	x	x
UART0	Transmit	x	x
USART1	Transmit	x	N/A
USART0	Transmit	x	x
DAC	Transmit	x	N/A
SPI	Transmit	x	x
SSC	Transmit	x	x
HSMCI	Transmit	x	N/A
PIOA	Transmit	x	x
TWI1	Receive	x	x
TWI0	Receive	x	x
UART1	Receive	x	N/A

Table 7-4. Peripheral DMA Controller (Continued)

Instance Name	Channel T/R	100 & 64 Pins	48 Pins
UART0	Receive	x	x
USART1	Receive	x	x
USART0	Receive	x	x
ADC	Receive	x	x
SPI	Receive	x	x
SSC	Receive	x	x
HSMCI	Receive	x	N/A
PIOA	Receive	x	x

7.7 Debug and Test Features

- Debug access to all memory and registers in the system, including Cortex-M3 register bank when the core is running, halted, or held in reset.
- Serial Wire Debug Port (SW-DP) and Serial Wire JTAG Debug Port (SWJ-DP) debug access
- Flash Patch and Breakpoint (FPB) unit for implementing breakpoints and code patches
- Data Watchpoint and Trace (DWT) unit for implementing watchpoints, data tracing, and system profiling
- Instrumentation Trace Macrocell (ITM) for support of printf style debugging
- IEEE1149.1 JTAG Boundary-can on All Digital Pins

8. Product Mapping

Figure 8-1. SAM3S Product Mapping

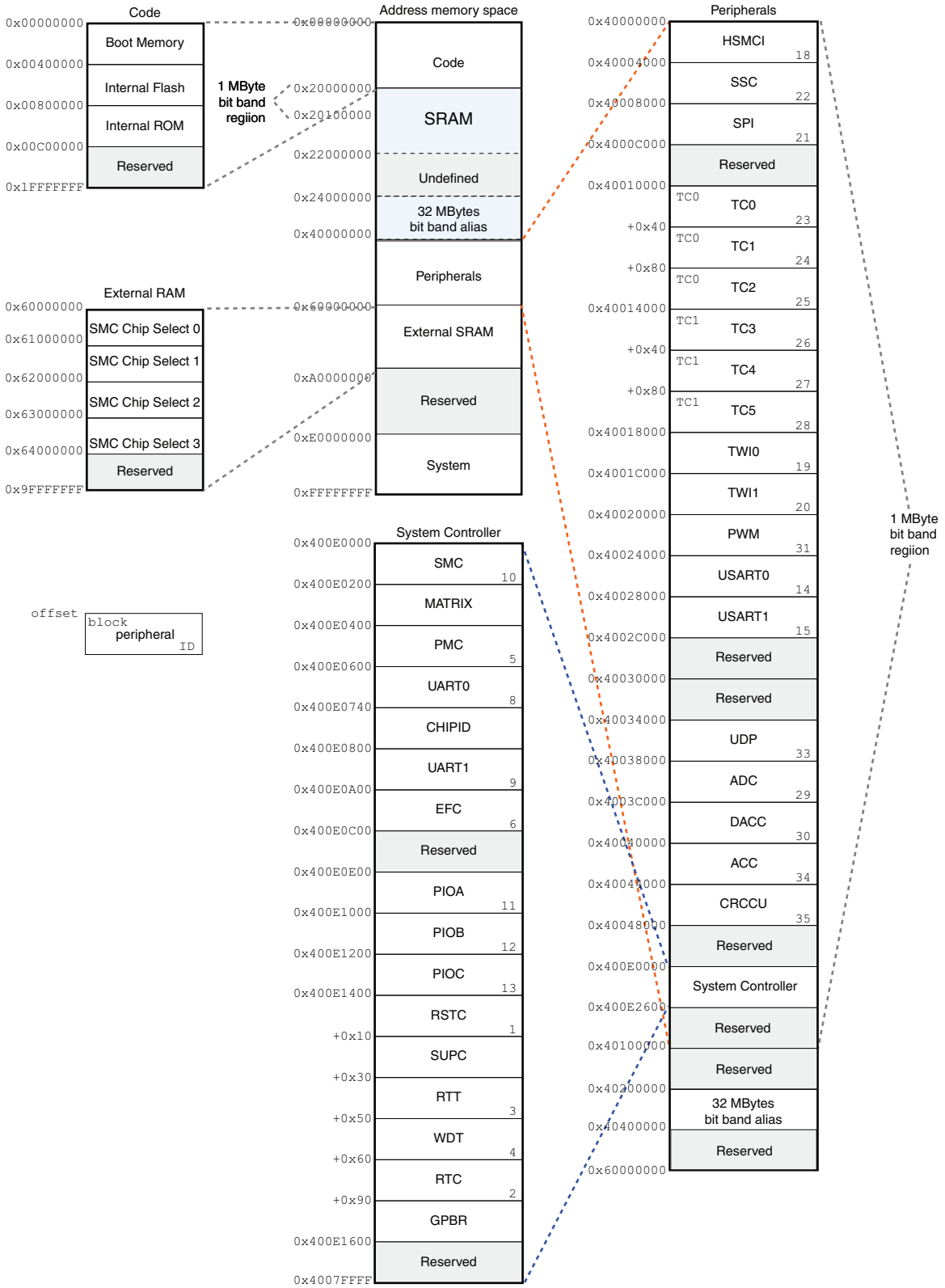

9. Memories

9.1 Embedded Memories

9.1.1 Internal SRAM

The ATSAM3S4 product (256-Kbyte internal Flash version) embeds a total of 48 Kbytes high-speed SRAM.

The ATSAM3S2 product (128-Kbyte internal Flash version) embeds a total of 32 Kbytes high-speed SRAM.

The ATSAM3S1 product (64-Kbyte internal Flash version) embeds a total of 16 Kbytes high-speed SRAM.

The SRAM is accessible over System Cortex-M3 bus at address 0x2000 0000.

The SRAM is in the bit band region. The bit band alias region is mapped from 0x2200 0000 to 0x23FF FFFF.

9.1.2 Internal ROM

The SAM3S product embeds an Internal ROM, which contains the SAM Boot Assistant (SAM-BA), In Application Programming routines (IAP) and Fast Flash Programming Interface (FFPI).

At any time, the ROM is mapped at address 0x0080 0000.

9.1.3 Embedded Flash

9.1.3.1 Flash Overview

The Flash of the ATSAM3S4 (256-Kbytes internal Flash version) is organized in one bank of 1024 pages (Single plane) of 256 bytes.

The Flash of the ATSAM3S2 (128-Kbytes internal Flash version) is organized in one bank of 512 pages (Single plane) of 256 bytes.

The Flash of the ATSAM3S1 (64-Kbytes internal Flash version) is organized in one bank of 256 pages (Single plane) of 256 bytes.

The Flash contains a 128-byte write buffer, accessible through a 32-bit interface.

9.1.3.2 Flash Power Supply

The Flash is supplied by VDDCORE.

9.1.3.3 Enhanced Embedded Flash Controller

The Enhanced Embedded Flash Controller (EEFC) manages accesses performed by the masters of the system. It enables reading the Flash and writing the write buffer. It also contains a User Interface, mapped on the APB.

The Enhanced Embedded Flash Controller ensures the interface of the Flash block with the 32-bit internal bus. Its 128-bit wide memory interface increases performance.

The user can choose between high performance or lower current consumption by selecting either 128-bit or 64-bit access. It also manages the programming, erasing, locking and unlocking sequences of the Flash using a full set of commands.

One of the commands returns the embedded Flash descriptor definition that informs the system about the Flash organization, thus making the software generic.

9.1.3.4 Flash Speed

The user needs to set the number of wait states depending on the frequency used.

For more details, refer to the AC Characteristics sub section in the product Electrical Characteristics Section.

9.1.3.5 Lock Regions

Several lock bits used to protect write and erase operations on lock regions. A lock region is composed of several consecutive pages, and each lock region has its associated lock bit.

Table 9-1. Number of Lock Bits

Product	Number of Lock Bits	Lock Region Size
ATSAM3S4	16	16 kbytes (64 pages)
ATSAM3S2	8	16 kbytes (64 pages)
ATSAM3S1	4	16 kbytes (64 pages)

If a locked-region's erase or program command occurs, the command is aborted and the EEFC triggers an interrupt.

The lock bits are software programmable through the EEFC User Interface. The command "Set Lock Bit" enables the protection. The command "Clear Lock Bit" unlocks the lock region.

Asserting the ERASE pin clears the lock bits, thus unlocking the entire Flash.

9.1.3.6 Security Bit Feature

The SAM3S features a security bit, based on a specific General Purpose NVM bit (GPNVM bit 0). When the security is enabled, any access to the Flash, SRAM, Core Registers and Internal Peripherals either through the ICE interface or through the Fast Flash Programming Interface, is forbidden. This ensures the confidentiality of the code programmed in the Flash.

This security bit can only be enabled, through the command "Set General Purpose NVM Bit 0" of the EEFC User Interface. Disabling the security bit can only be achieved by asserting the ERASE pin at 1, and after a full Flash erase is performed. When the security bit is deactivated, all accesses to the Flash, SRAM, Core registers, Internal Peripherals are permitted.

It is important to note that the assertion of the ERASE pin should always be longer than 200 ms.

As the ERASE pin integrates a permanent pull-down, it can be left unconnected during normal operation. However, it is safer to connect it directly to GND for the final application.

9.1.3.7 Calibration Bits

NVM bits are used to calibrate the brownout detector and the voltage regulator. These bits are factory configured and cannot be changed by the user. The ERASE pin has no effect on the calibration bits.

9.1.3.8 Unique Identifier

Each device integrates its own 128-bit unique identifier. These bits are factory configured and cannot be changed by the user. The ERASE pin has no effect on the unique identifier.

9.1.3.9 *Fast Flash Programming Interface*

The Fast Flash Programming Interface allows programming the device through either a serial JTAG interface or through a multiplexed fully-handshaked parallel port. It allows gang programming with market-standard industrial programmers.

The FFPI supports read, page program, page erase, full erase, lock, unlock and protect commands.

The Fast Flash Programming Interface is enabled and the Fast Programming Mode is entered when TST and PA0 and PA1are tied low.

9.1.3.10 *SAM-BA® Boot*

The SAM-BA Boot is a default Boot Program which provides an easy way to program in-situ the on-chip Flash memory.

The SAM-BA Boot Assistant supports serial communication via the UART and USB.

The SAM-BA Boot provides an interface with SAM-BA Graphic User Interface (GUI).

9.1.3.11 *GPNVM Bits*

The SAM3S features two GPNVM bits that can be cleared or set respectively through the commands “Clear GPNVM Bit” and “Set GPNVM Bit” of the EEFC User Interface.

Table 9-2. General Purpose Non-volatile Memory Bits

GPNVMBit[#]	Function
0	Security bit
1	Boot mode selection

9.1.4 Boot Strategies

The system always boots at address 0x0. To ensure maximum boot possibilities, the memory layout can be changed via GPNVM.

A general-purpose NVM (GPNVM) bit is used to boot either on the ROM (default) or from the Flash.

The GPNVM bit can be cleared or set respectively through the commands “Clear General-purpose NVM Bit” and “Set General-purpose NVM Bit” of the EEFC User Interface.

Setting GPNVM Bit 1 selects the boot from the Flash, clearing it selects the boot from the ROM. Asserting ERASE clears the GPNVM Bit 1 and thus selects the boot from the ROM by default.

9.2 External Memories

The SAM3S features an External Bus Interface to provide the interface to a wide range of external memories and to any parallel peripheral.

9.2.1 Static Memory Controller

- 8-bit Data Bus
- Up to 24-bit Address Bus (up to 16 MBytes linear per chip select)
- Up to 4 chip selects, Configurable Assignment
- Multiple Access Modes supported
  - Chip Select, Write enable or Read enable Control Mode

  - Asynchronous read in Page Mode supported (4- up to 32-byte page size)
- Multiple device adaptability
  - Control signals programmable setup, pulse and hold time for each Memory Bank
- Multiple Wait State Management
  - Programmable Wait State Generation
  - External Wait Request
  - Programmable Data Float Time
- Slow Clock mode supported
- Additional Logic for NAND Flash

10. System Controller

The System Controller is a set of peripherals, which allow handling of key elements of the system, such as power, resets, clocks, time, interrupts, watchdog, etc...

See the system controller block diagram in Figure 10-1 on page 35.

Figure 10-1. System Controller Block Diagram

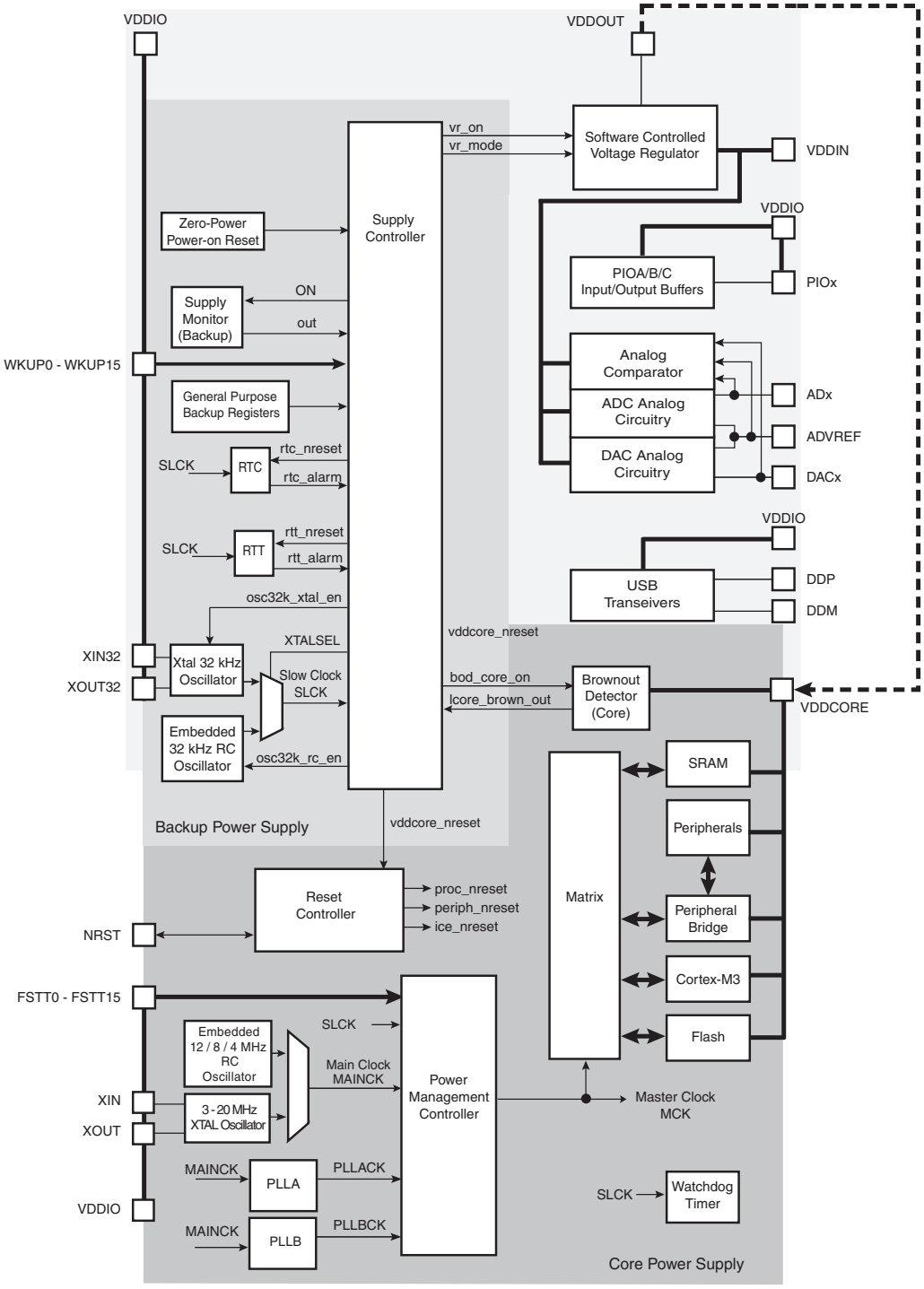

FSTT0 - FSTT15 are possible Fast Startup Sources, generated by WKUP0-WKUP15 Pins, but are not physical pins.

10.1 System Controller and Peripherals Mapping

Please refer to Section 8-1 “SAM3S Product Mapping” on page 30.

All the peripherals are in the bit band region and are mapped in the bit band alias region.

10.2 Power-on-Reset, Brownout and Supply Monitor

The SAM3S embeds three features to monitor, warn and/or reset the chip:

- Power-on-Reset on VDDIO
- Brownout Detector on VDDCORE
- Supply Monitor on VDDIO

10.2.1 Power-on-Reset

The Power-on-Reset monitors VDDIO. It is always activated and monitors voltage at start up but also during power down. If VDDIO goes below the threshold voltage, the entire chip is reset. For more information, refer to the Electrical Characteristics section of the datasheet.

10.2.2 Brownout Detector on VDDCORE

The Brownout Detector monitors VDDCORE. It is active by default. It can be deactivated by software through the Supply Controller (SUPC_MR). It is especially recommended to disable it during low-power modes such as wait or sleep modes.

If VDDCORE goes below the threshold voltage, the reset of the core is asserted. For more information, refer to the Supply Controller (SUPC) and Electrical Characteristics sections of the datasheet.

10.2.3 Supply Monitor on VDDIO

The Supply Monitor monitors VDDIO. It is not active by default. It can be activated by software and is fully programmable with 16 steps for the threshold (between 1.9V to 3.4V). It is controlled by the Supply Controller (SUPC). A sample mode is possible. It allows to divide the supply monitor power consumption by a factor of up to 2048. For more information, refer to the SUPC and Electrical Characteristics sections of the datasheet.

10.3 Reset Controller

The Reset Controller is based on a Power-on-Reset cell, and a Supply Monitor on VDDCORE.

The Reset Controller is capable to return to the software the source of the last reset, either a general reset, a wake-up reset, a software reset, a user reset or a watchdog reset.

The Reset Controller controls the internal resets of the system and the NRST pin input/output. It is capable to shape a reset signal for the external devices, simplifying to a minimum connection of a push-button on the NRST pin to implement a manual reset.

The configuration of the Reset Controller is saved as supplied on VDDIO.

10.4 Supply Controller (SUPC)

The Supply Controller controls the power supplies of each section of the processor and the peripherals (via Voltage regulator control)

The Supply Controller has its own reset circuitry and is clocked by the 32 kHz Slow clock generator.

The reset circuitry is based on a zero-power power-on reset cell and a brownout detector cell. The zero-power power-on reset allows the Supply Controller to start properly, while the software-programmable brownout detector allows detection of either a battery discharge or main voltage loss.

The Slow Clock generator is based on a 32 kHz crystal oscillator and an embedded 32 kHz RC oscillator. The Slow Clock defaults to the RC oscillator, but the software can enable the crystal oscillator and select it as the Slow Clock source.

The Supply Controller starts up the device by sequentially enabling the internal power switches and the Voltage Regulator, then it generates the proper reset signals to the core power supply.

It also enables to set the system in different low power modes and to wake it up from a wide range of events.

10.5 Clock Generator

The Clock Generator is made up of:

- One Low Power 32768Hz Slow Clock oscillator with bypass mode
- One Low-Power RC oscillator
- One 3-20 MHz Crystal Oscillator, which can be bypassed
- One Fast RC oscillator factory programmed, 3 output frequencies can be selected: 4, 8 or 12 MHz. By default 4 MHz is selected.
- One 60 to 130 MHz PLL (PLLB) providing a clock for the USB Full Speed Controller
- One 60 to 130 MHz programmable PLL (PLLA), capable to provide the clock MCK to the processor and to the peripherals. The PLLA input frequency is from 3.5 to 20 MHz.

Figure 10-2. Clock Generator Block Diagram

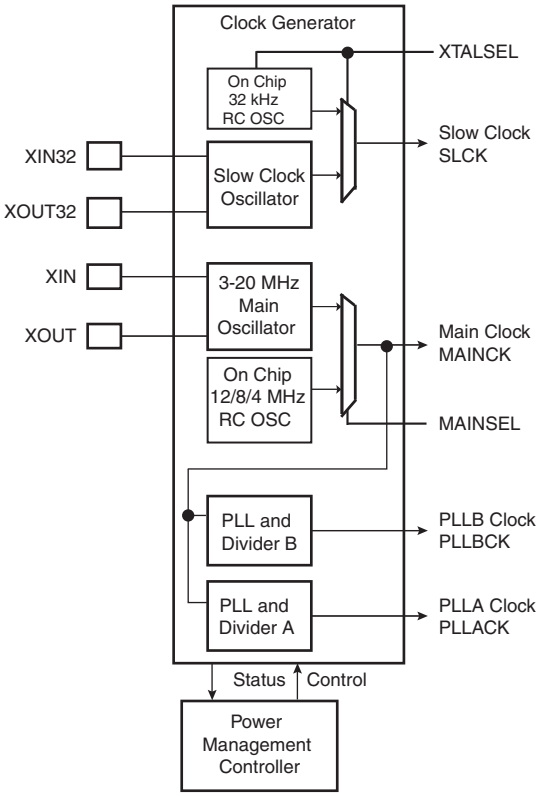

10.6 Power Management Controller

The Power Management Controller provides all the clock signals to the system. It provides:

- the Processor Clock, HCLK
- the Free running processor clock, FCLK
- the Cortex SysTick external clock
- the Master Clock, MCK, in particular to the Matrix and the memory interfaces
- the USB Clock, UDPCK
- independent peripheral clocks, typically at the frequency of MCK
- three programmable clock outputs: PCK0, PCK1 and PCK2

The Supply Controller selects between the 32 kHz RC oscillator or the crystal oscillator. The unused oscillator is disabled automatically so that power consumption is optimized.

By default, at startup the chip runs out of the Master Clock using the fast RC oscillator running at 4 MHz.

The user can trim the 8 and 12 MHz RC Oscillator frequency by software.

Figure 10-3. SAM3S Power Management Controller Block Diagram

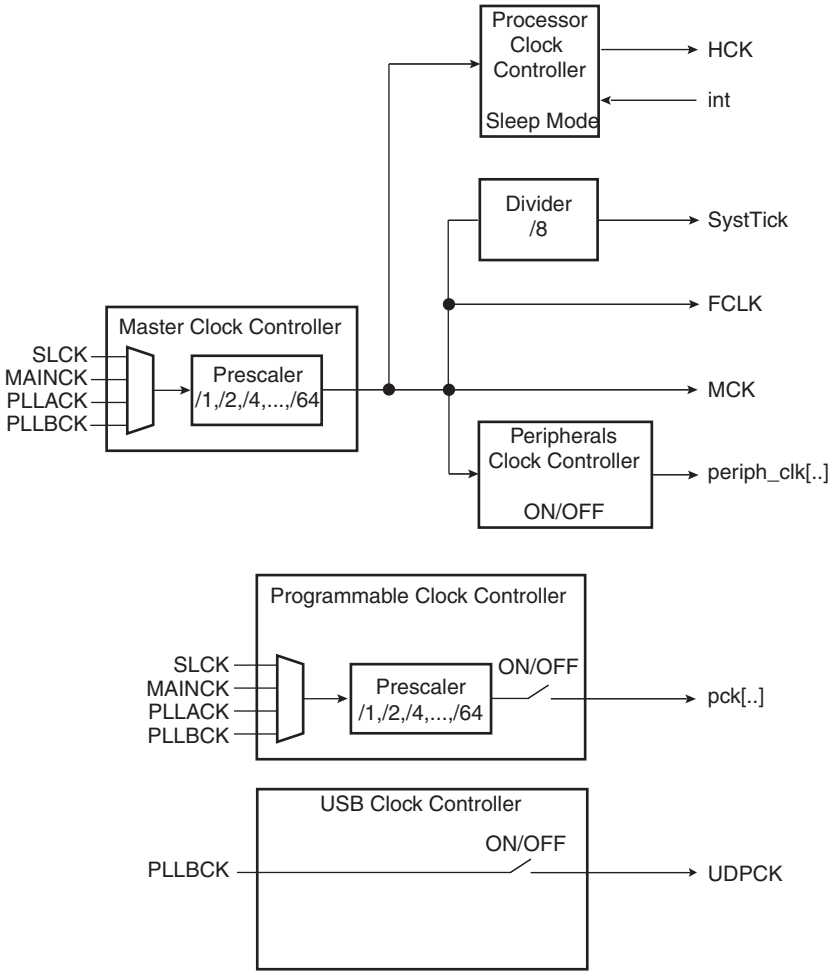

The SysTick calibration value is fixed at 8000 which allows the generation of a time base of 1 ms with SystTick clock at 8 MHz (max HCLK/8 = 64 MHz/8).

10.7 Watchdog Timer

- 16-bit key-protected only-once-Programmable Counter
- Windowed, prevents the processor to be in a dead-lock on the watchdog access.

10.8 SysTick Timer

- 24-bit down counter
- Self-reload capability
- Flexible System timer

10.9 Real Time Timer

- Real Time Timer, allowing backup of time with different accuracies
  - 32-bit free-running back-up counter
  - Integrates a 16-bit programmable prescaler running on slow clock

– Alarm register capable to generate a wake-up of the system through the Shut Down Controller

10.10 Real Time Clock

- Low power consumption
- Full asynchronous design
- Two hundred year calendar
- Programmable Periodic Interrupt
- Alarm and update parallel load
- Control of alarm and update Time/Calendar Data In

10.11 General Purpose Backup Registers

- Eight 32-bit general-purpose backup registers

10.12 Nested Vectored Interrupt Controller

- Thirty maskable external interrupts
- Sixteen priority levels
- Processor state automatically saved on interrupt entry, and restored on
- Dynamic reprioritization of interrupts
- Priority grouping.
  – selection of preempting interrupt levels and non-preempting interrupt levels.
- Support for tail-chaining and late arrival of interrupts.
  – back-to-back interrupt processing without the overhead of state saving and restoration between interrupts.
- Processor state automatically saved on interrupt entry, and restored on interrupt exit, with no instruction overhead.

10.13 Chip Identification

- Chip Identifier (CHIPID) registers permit recognition of the device and its revision.

Table 10-1. SAM3S Chip IDs Register

Chip Name	Flash Size (KBytes)	Pin Count	DBGU_CIDR	CHIPID_EXID
ATSAM3S4A (Rev A)	256	48	0x28800960	0x0
ATSAM3S2A (Rev A)	128	48	0x288A0760	0x0
ATSAM3S1A (Rev A)	64	48	0x28890560	0x0
ATSAM3S4B (Rev A)	256	64	0x28900960	0x0
ATSAM3S2B (Rev A)	128	64	0x289A0760	0x0
ATSAM3S1B (Rev A)	64	64	0x28990560	0x0
ATSAM3S4C (Rev A)	256	100	0x28A00960	0x0
ATSAM3S2C (Rev A)	128	100	0x28AA0760	0x0
ATSAM3S1C (Rev A)	64	100	0x28A90560	0x0

- JTAG ID: 0x05B2D03F

10.14 UART

- Two-pin UART
  - Implemented features are 100% compatible with the standard Atmel USART
  - Independent receiver and transmitter with a common programmable Baud Rate Generator
  - Even, Odd, Mark or Space Parity Generation
  - Parity, Framing and Overrun Error Detection
  - Automatic Echo, Local Loopback and Remote Loopback Channel Modes
  - Support for two PDC channels with connection to receiver and transmitter

10.15 PIO Controllers

- 3 PIO Controllers, PIOA, PIOB and PIOC (100-pin version only) controlling a maximum of 79 I/O Lines
- Fully programmable through Set/Clear Registers

Table 10-2. PIO available according to pin count

Version	48 pin	64 pin	100 pin
PIOA	21	32	32
PIOB	13	15	15
PIOC	-	-	32

- Multiplexing of four peripheral functions per I/O Line
- For each I/O Line (whether assigned to a peripheral or used as general purpose I/O)
  - Input change, rising edge, falling edge, low level and level interrupt
  - Debouncing and Glitch filter
  - Multi-drive option enables driving in open drain
  - Programmable pull-up or pull-down on each I/O line
  - Pin data status register, supplies visibility of the level on the pin at any time
- Synchronous output, provides Set and Clear of several I/O lines in a single write

11. Peripherals

11.1 Peripheral Identifiers

Table 11-1 defines the Peripheral Identifiers of the SAM3S. A peripheral identifier is required for the control of the peripheral interrupt with the Nested Vectored Interrupt Controller and for the control of the peripheral clock with the Power Management Controller.

Table 11-1. Peripheral Identifiers

Instance ID	Instance Name	NVIC Interrupt	PMC Clock Control	Instance Description
0	SUPC	X		Supply Controller
1	RSTC	X		Reset Controller
2	RTC	X		Real Time Clock
3	RTT	X		Real Time Timer
4	WDT	X		Watchdog Timer
5	PMC	X		Power Management Controller
6	EEFC	X		Enhanced Embedded Flash Controller
7	-	-		Reserved
8	UART0	X	X	UART 0
9	UART1	X	X	UART 1
10	SMC	X	X	SMC
11	PIOA	X	X	Parallel I/O Controller A
12	PIOB	X	X	Parallel I/O Controller B
13	PIOC	X	X	Parallel I/O Controller C
14	USART0	X	X	USART 0
15	USART1	X	X	USART 1
16	-	-	-	Reserved
17	-	-	-	Reserved
18	HSMCI	X	X	High Speed Multimedia Card Interface
19	TWI0	X	X	Two Wire Interface 0
20	TWI1	X	X	Two Wire Interface 1
21	SPI	X	X	Serial Peripheral Interface
22	SSC	X	X	Synchronous Serial Controller
23	TC0	X	X	Timer/Counter 0
24	TC1	X	X	Timer/Counter 1
25	TC2	X	X	Timer/Counter 2
26	TC3	X	X	Timer/Counter 3
27	TC4	X	X	Timer/Counter 4
28	TC5	X	X	Timer/Counter 5
29	ADC	X	X	Analog-to-Digital Converter
30	DACC	X	X	Digital-to-Analog Converter
31	PWM	X	X	Pulse Width Modulation
32	CRCCU	X	X	CRC Calculation Unit
33	ACC	X	X	Analog Comparator
34	UDP	X	X	USB Device Port

11.2 Peripheral Signal Multiplexing on I/O Lines

The SAM3S product features 2 PIO controllers on 48-pin and 64-pin versions (PIOA, PIOB) or 3 PIO controllers on the 100-pin version, (PIOA, PIOB, PIOC), that multiplex the I/O lines of the peripheral set.

The SAM3S 64-pin and 100-pin PIO Controllers control up to 32 lines. (See, Table 10-2.) Each line can be assigned to one of three peripheral functions: A, B or C. The multiplexing tables in the following pages define how the I/O lines of the peripherals A, B and C are multiplexed on the PIO Controllers. The column “Comments” has been inserted in this table for the user’s own comments; it may be used to track how pins are defined in an application.

Note that some peripheral functions which are output only, might be duplicated within the tables.

11.2.1 PIO Controller A Multiplexing

Table 11-2. Multiplexing on PIO Controller A (PIOA)

I/O Line	Peripheral A	Peripheral B	Peripheral C	Extra Function	System Function	Comments
PA0	PWMH0	TIOA0	A17	WKUP0		High drive
PA1	PWMH1	TIOB0	A18	WKUP1		High drive
PA2	PWMH2	SCK0	DATRG	WKUP2		High drive
PA3	TWD0	NPCS3				High drive
PA4	TWCK0	TCLK0		WKUP3		
PA5	RXD0	NPCS3		WKUP4		
PA6	TXD0	PCK0				
PA7	RTS0	PWMH3			XIN32	
PA8	CTS0	ADTRG		WKUP5	XOUT32	
PA9	URXD0	NPCS1	PWMFI0	WKUP6		
PA10	UTXD0	NPCS2				
PA11	NPCS0	PWMH0		WKUP7		
PA12	MISO	PWMH1				
PA13	MOSI	PWMH2				
PA14	SPCK	PWMH3		WKUP8		
PA15	TF	TIOA1	PWML3	WKUP14/PIODCEN1		
PA16	TK	TIOB1	PWML2	WKUP15/PIODCEN2		
PA17	TD	PCK1	PWMH3	AD0		
PA18	RD	PCK2	A14	AD1		
PA19	RK	PWML0	A15	AD2/WKUP9		
PA20	RF	PWML1	A16	AD3/WKUP10		
PA21	RXD1	PCK1		AD8		64/100-pin versions
PA22	TXD1	NPCS3	NCS2	AD9		64/100-pin versions
PA23	SCK1	PWMH0	A19	PIODCCLK		64/100-pin versions
PA24	RTS1	PWMH1	A20	PIODC0		64/100-pin versions
PA25	CTS1	PWMH2	A23	PIODC1		64/100-pin versions
PA26	DCD1	TIOA2	MCDA2	PIODC2		64/100-pin versions
PA27	DTR1	TIOB2	MCDA3	PIODC3		64/100-pin versions
PA28	DSR1	TCLK1	MCCDA	PIODC4		64/100-pin versions
PA29	RI1	TCLK2	MCCK	PIODC5		64/100-pin versions
PA30	PWML2	NPCS2	MCDA0	WKUP11/PIODC6		64/100-pin versions
PA31	NPCS1	PCK2	MCDA1	PIODC7		64/100-pin versions

11.2.2 PIO Controller B Multiplexing

Table 11-3. Multiplexing on PIO Controller B (PIOB)

I/O Line	Peripheral A	Peripheral B	Peripheral C	Extra Function	System Function	Comments
PB0	PWMH0			AD4		
PB1	PWMH1			AD5		
PB2	URXD1	NPCS2		AD6/ WKUP12		
PB3	UTXD1	PCK2		AD7		
PB4	TWD1	PWMH2			TDI	
PB5	TWCK1	PWML0		WKUP13	TDO/TRACESWO	
PB6					TMS/SWDIO	
PB7					TCK/SWCLK	
PB8					XOUT	
PB9					XIN	
PB10					DDM	
PB11					DDP	
PB12	PWML1				ERASE	
PB13	PWML2	PCK0		DAC0		64/100-pin versions
PB14	NPCS1	PWMH3		DAC1		64/100-pin versions

11.2.3 PIO Controller C Multiplexing

Table 11-4. Multiplexing on PIO Controller C (PIOC)

I/O Line	Peripheral A	Peripheral B	Peripheral C	Extra Function	System Function	Comments
PC0	D0	PWML0				100-pin version
PC1	D1	PWML1				100-pin version
PC2	D2	PWML2				100-pin version
PC3	D3	PWML3				100-pin version
PC4	D4	NPCS1				100-pin version
PC5	D5					100-pin version
PC6	D6					100-pin version
PC7	D7					100-pin version
PC8	NWE					100-pin version
PC9	NANDOE					100-pin version
PC10	NANDWE					100-pin version
PC11	NRD					100-pin version
PC12	NCS3			AD12		100-pin version
PC13	NWAIT	PWML0		AD10		100-pin version
PC14	NCS0					100-pin version
PC15	NCS1	PWML1		AD11		100-pin version
PC16	A21/NANDALE					100-pin version
PC17	A22/NANDCLE					100-pin version
PC18	A0	PWMH0				100-pin version
PC19	A1	PWMH1				100-pin version
PC20	A2	PWMH2				100-pin version
PC21	A3	PWMH3				100-pin version
PC22	A4	PWML3				100-pin version
PC23	A5	TIOA3				100-pin version
PC24	A6	TIOB3				100-pin version
PC25	A7	TCLK3				100-pin version
PC26	A8	TIOA4				100-pin version
PC27	A9	TIOB4				100-pin version
PC28	A10	TCLK4				100-pin version
PC29	A11	TIOA5		AD13		100-pin version
PC30	A12	TIOB5		AD14		100-pin version
PC31	A13	TCLK5				100-pin version

12. Embedded Peripherals Overview

12.1 Serial Peripheral Interface (SPI)

- Supports communication with serial external devices
  - Four chip selects with external decoder support allow communication with up to 15 peripherals
  - Serial memories, such as DataFlash and 3-wire EEPROMs
  - Serial peripherals, such as ADCs, DACs, LCD Controllers, CAN Controllers and Sensors
  - External co-processors
- Master or slave serial peripheral bus interface
  - 8- to 16-bit programmable data length per chip select
  - Programmable phase and polarity per chip select
  - Programmable transfer delays between consecutive transfers and between clock and data per chip select
  - Programmable delay between consecutive transfers
  - Selectable mode fault detection
- Very fast transfers supported
  - Transfers with baud rates up to MCK
  - The chip select line may be left active to speed up transfers on the same device

12.2 Two Wire Interface (TWI)

- Master, Multi-Master and Slave Mode Operation
- Compatibility with Atmel two-wire interface, serial memory and I^2C compatible devices
- One, two or three bytes for slave address
- Sequential read/write operations
- Bit Rate: Up to 400 kbit/s
- General Call Supported in Slave Mode
- Connecting to PDC channel capabilities optimizes data transfers in Master Mode only
  - One channel for the receiver, one channel for the transmitter
  - Next buffer support

12.3 Universal Asynchronous Receiver Transceiver (UART)

- Two-pin UART
  - Independent receiver and transmitter with a common programmable Baud Rate Generator
  - Even, Odd, Mark or Space Parity Generation
  - Parity, Framing and Overrun Error Detection
  - Automatic Echo, Local Loopback and Remote Loopback Channel Modes
  - Support for two PDC channels with connection to receiver and transmitter

12.4 Universal Synchronous Asynchronous Receiver Transceiver (USART)

- Programmable Baud Rate Generator with Fractional Baud rate support
- 5- to 9-bit full-duplex synchronous or asynchronous serial communications
  - 1, 1.5 or 2 stop bits in Asynchronous Mode or 1 or 2 stop bits in Synchronous Mode
  - Parity generation and error detection
  - Framing error detection, overrun error detection
  - MSB- or LSB-first
  - Optional break generation and detection
  - By 8 or by-16 over-sampling receiver frequency
  - Hardware handshaking RTS-CTS
  - Receiver time-out and transmitter timeguard
  - Optional Multi-drop Mode with address generation and detection
  - Optional Manchester Encoding
  - Full modem line support on USART1 (DCD-DSR-DTR-RI)
- RS485 with driver control signal
- ISO7816, T = 0 or T = 1 Protocols for interfacing with smart cards
  - NACK handling, error counter with repetition and iteration limit
- SPI Mode
  - Master or Slave
  - Serial Clock programmable Phase and Polarity
  - SPI Serial Clock (SCK) Frequency up to MCK/4
- IrDA modulation and demodulation
  - Communication at up to 115.2 Kbps
- Test Modes
  - Remote Loopback, Local Loopback, Automatic Echo

12.5 Synchronous Serial Controller (SSC)

- Provides serial synchronous communication links used in audio and telecom applications (with CODECs in Master or Slave Modes, I^2S, TDM Buses, Magnetic Card Reader)
- Contains an independent receiver and transmitter and a common clock divider
- Offers configurable frame sync and data length
- Receiver and transmitter can be programmed to start automatically or on detection of different event on the frame sync signal
- Receiver and transmitter include a data signal, a clock signal and a frame synchronization signal

12.6 Timer Counter (TC)

- Six 16-bit Timer Counter Channels
- Wide range of functions including:
  - Frequency Measurement
  - Event Counting

  - Interval Measurement
  - Pulse Generation
  - Delay Timing
  - Pulse Width Modulation
  - Up/down Capabilities
- Each channel is user-configurable and contains:
  - Three external clock inputs
  - Five internal clock inputs
  - Two multi-purpose input/output signals
- Two global registers that act on all three TC Channels
- Quadrature decoder
  - Advanced line filtering
  - Position / revolution / speed
- 2-bit Gray Up/Down Counter for Stepper Motor

12.7 Pulse Width Modulation Controller (PWM)

- One Four-channel 16-bit PWM Controller, 16-bit counter per channel
- Common clock generator, providing Thirteen Different Clocks
  - A Modulo n counter providing eleven clocks
  - Two independent Linear Dividers working on modulo n counter outputs
  - High Frequency Asynchronous clocking mode
- Independent channel programming
  - Independent Enable Disable Commands
  - Independent Clock Selection
  - Independent Period and Duty Cycle, with Double Buffering
  - Programmable selection of the output waveform polarity
  - Programmable center or left aligned output waveform
  - Independent Output Override for each channel
  - Independent complementary Outputs with 12-bit dead time generator for each channel
  - Independent Enable Disable Commands
  - Independent Clock Selection
  - Independent Period and Duty Cycle, with Double Buffering
- Synchronous Channel mode
  - Synchronous Channels share the same counter
  - Mode to update the synchronous channels registers after a programmable number of periods
- Connection to one PDC channel
  - Offers Buffer transfer without Processor Intervention, to update duty cycle of synchronous channels
- independent event lines which can send up to 4 triggers on ADC within a period

- Programmable Fault Input providing an asynchronous protection of outputs
- Stepper motor control (2 Channels)

12.8 High Speed Multimedia Card Interface (HSMCI)

- 4-bit or 1-bit Interface
- Compatibility with MultiMedia Card Specification Version 4.3
- Compatibility with SD and SDHC Memory Card Specification Version 2.0
- Compatibility with SDIO Specification Version V1.1.
- Compatibility with CE-ATA Specification 1.1
- Cards clock rate up to Master Clock divided by 2
- Boot Operation Mode support
- High Speed mode support
- Embedded power management to slow down clock rate when not used
- HSMCI has one slot supporting
  - One MultiMediaCard bus (up to 30 cards) or
  - One SD Memory Card
  - One SDIO Card
- Support for stream, block and multi-block data read and write

12.9 USB Device Port (UDP)

- USB V2.0 full-speed compliant,12 Mbits per second.
- Embedded USB V2.0 full-speed transceiver
- Embedded 2688-byte dual-port RAM for endpoints
- Eight endpoints
  - Endpoint 0: 64 bytes
  - Endpoint 1 and 2: 64 bytes ping-pong
  - Endpoint 3: 64 bytes
  - Endpoint 4 and 5: 512 bytes ping-pong
  - Endpoint 6 and 7: 64 bytes ping-pong
  - Ping-pong Mode (two memory banks) for Isochronous and bulk endpoints
- Suspend/resume logic
- Integrated Pull-up on DDP
- Pull-down resistor on DDM and DDP when disabled

12.10 Analog-to-Digital Converter (ADC)

- up to 16 Channels,
- 10/12-bit resolution
- up to 1 MSample/s
- programmable sequence of conversion on each channel
- Integrated temperature sensor
- Single ended/differential conversion

- Programmable gain: 1, 2, 4

12.11 Digital-to-Analog Converter (DAC)

- Up to 2 channel 12-bit DAC
- Up to 2 mega-samples conversion rate in single channel mode
- Flexible conversion range
- Multiple trigger sources for each channel
- 2 Sample/Hold (S/H) outputs
- Built-in offset and gain calibration
- Possibility to drive output to ground
- Possibility to use as input to analog comparator or ADC (as an internal wire and without S/H stage)
- Two PDC channels
- Power reduction mode

12.12 Static Memory Controller

- 16-Mbyte Address Space per Chip Select
- 8- bit Data Bus
- Word, Halfword, Byte Transfers
- Programmable Setup, Pulse And Hold Time for Read Signals per Chip Select
- Programmable Setup, Pulse And Hold Time for Write Signals per Chip Select
- Programmable Data Float Time per Chip Select
- External Wait Request
- Automatic Switch to Slow Clock Mode
- Asynchronous Read in Page Mode Supported: Page Size Ranges from 4 to 32 Bytes
- NAND FLASH additional logic supporting NAND Flash with Multiplexed Data/Address buses
- Hardware Configurable number of chip select from 1 to 4
- Programmable timing on a per chip select basis

12.13 Analog Comparator

- One analog comparator
- High speed option vs. low power option
- Selectable input hysteresis:
  - 0, 20 mV, 50 mV
- Minus input selection:
  - DAC outputs
  - Temperature Sensor
  - ADVREF
  - AD0 to AD3 ADC channels
- Plus input selection:
  - All analog inputs

- output selection:
  - Internal signal
  - external pin
  - selectable inverter
- Interrupt on:
  - Rising edge, Falling edge, toggle

12.14 Cyclic Redundancy Check Calculation Unit (CRCCU)

- 32-bit cyclic redundancy check automatic calculation
- CRC calculation between two addresses of the memory

13. Package Drawings

The SAM3S series devices are available in LQFP, QFN and LFBGA packages.

Figure 13-1. 100-lead LQFP Package Mechanical Drawing

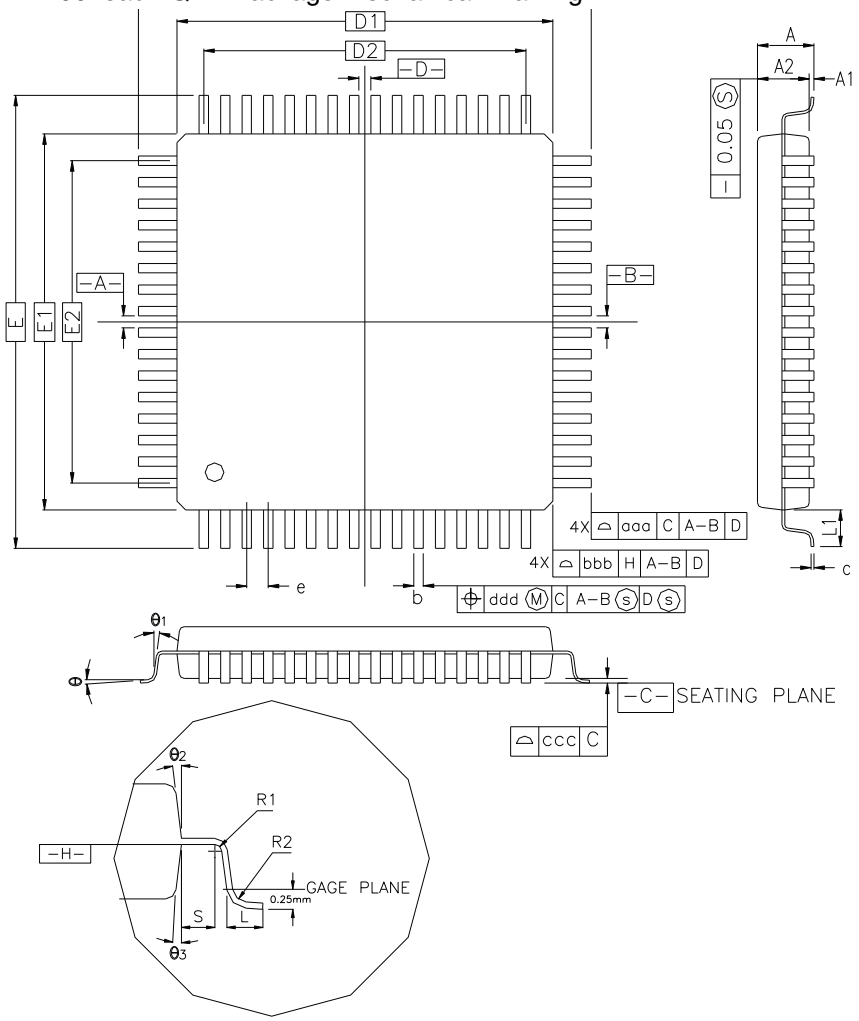

COTROL DIMENSIONS ARE IN MILLIMETERS.

SYMBOL	MILLIMETER			INCH		
	MIN.	NOM.	MAX.	MIN.	NOM.	
A	—	—	1.60	—	—	0
A1	0.05	—	0.15	0.002	—	0
A2	1.35	1.40	1.45	0.053	0.055	0
D	16.00 BSC.			0.630 BSC		
D1	14.00 BSC.			0.551 BSC		
E	16.00 BSC.			0.630 BSC		
E1	14.00 BSC.			0.551 BSC		
R2	0.08	—	0.20	0.003	—	0
R1	0.08	—	—	0.003	—	
θ	0°	3.5°	7°	0°	3.5°	
θ1	0°	—	—	0°	—	
θ2	11°	12°	13°	11°	12°	
θ3	11°	12°	13°	11°	12°	
c	0.09	—	0.20	0.004	—	0
L	0.45	0.60	0.75	0.018	0.024	0
L1	1.00 REF			0.039 REF		
S	0.20	—	—	0.008	—	
b	0.17	0.20	0.27	0.007	0.008	0
e	0.50 BSC.			0.020 BSC.		
D2	12.00			0.472		
E2	12.00			0.472		
TOLERANCES OF FORM AND POSITIO						
aaa	0.20			0.008		
bbb	0.20			0.008		
ccc	0.08			0.003		
ddd	0.08			0.003		

Note : 1. This drawing is for general information only. Refer to JEDEC Drawing MS-026 for additional information.

Figure 13-2. 100-ball LFBGA Package Drawing

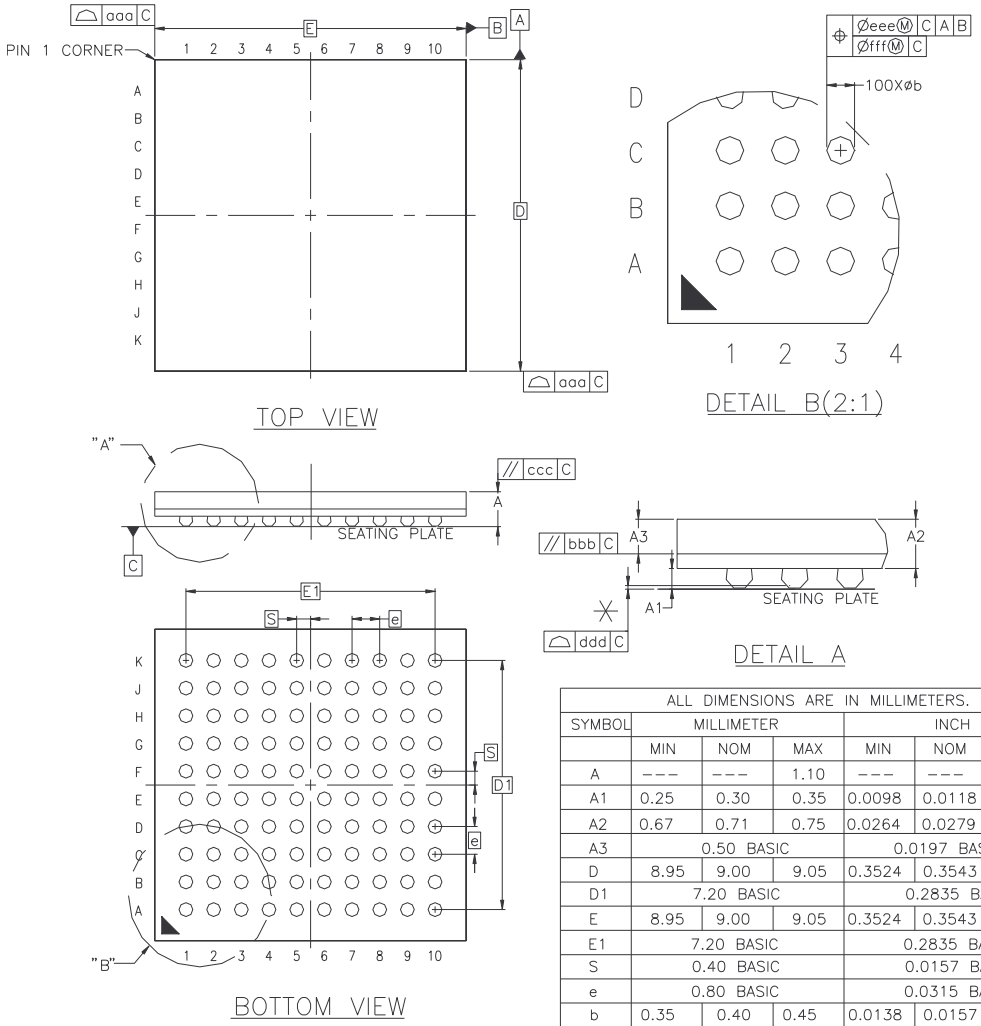

ALL DIMENSIONS ARE IN MILLIMETERS.						
SYMBOL	MILLIMETER			INCH		
	MIN	NOM	MAX	MIN	NOM	MAX
A	---	---	1.10	---	---	0.0575
A1	0.25	0.30	0.35	0.0098	0.0118	0.0138
A2	0.67	0.71	0.75	0.0264	0.0279	0.0295
A3	0.50 BASIC			0.0197 BASIC		
D	8.95	9.00	9.05	0.3524	0.3543	0.3563
D1	7.20 BASIC			0.2835 BASIC		
E	8.95	9.00	9.05	0.3524	0.3543	0.3563
E1	7.20 BASIC			0.2835 BASIC		
S	0.40 BASIC			0.0157 BASIC		
e	0.80 BASIC			0.0315 BASIC		
b	0.35	0.40	0.45	0.0138	0.0157	0.0177
aaa	0.15			0.0059		
bbb	0.20			0.0079		
ccc	0.20			0.0079		
ddd	0.12			0.0047		
eee	0.15			0.0059		
fff	0.08			0.0031		

Figure 13-3. 64- and 48-lead LQFP Package Drawing

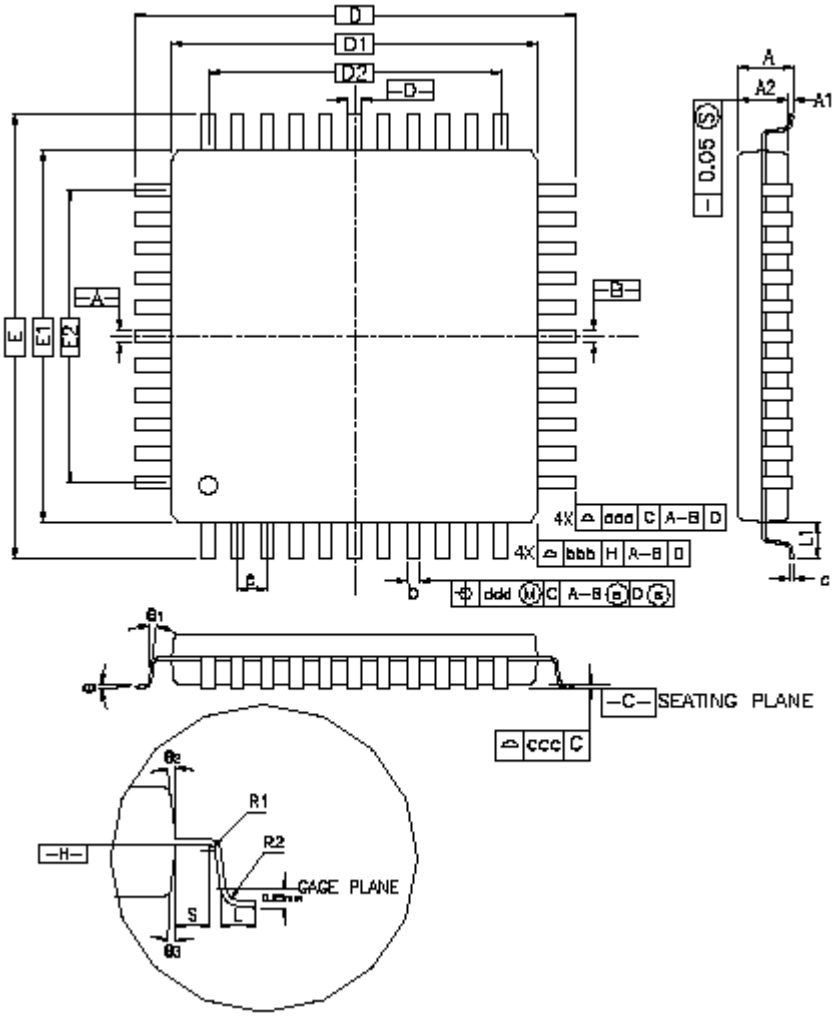

Table 13-1. 48-lead LQFP Package Dimensions (in mm)

Symbol	Millimeter			Inch		
	Min	**Nom**	**Max**	**Min**	**Nom**	**Max**
A	–	–	1.60	–	–	0.063
A1	0.05	–	0.15	0.002	–	0.006
A2	1.35	1.40	1.45	0.053	0.055	0.057
D	9.00 BSC			0.354 BSC		
D1	7.00 BSC			0.276 BSC		
E	9.00 BSC			0.354 BSC		
E1	7.00 BSC			0.276 BSC		
R2	0.08	–	0.20	0.003	–	0.008
R1	0.08	–	–	0.003	–	–
q	0°	3.5°	7°	0°	3.5°	7°
θ_1	0°	–	–	0°	–	–
θ_2	11°	12°	13°	11°	12°	13°
θ_3	11°	12°	13°	11°	12°	13°
c	0.09	–	0.20	0.004	–	0.008
L	0.45	0.60	0.75	0.018	0.024	0.030
L1	1.00 REF			0.039 REF		
S	0.20	–	–	0.008	–	–
b	0.17	0.20	0.27	0.007	0.008	0.011
e	0.50 BSC.			0.020 BSC.		
D2	5.50			0.217		
E2	5.50			0.217		
Tolerances of Form and Position						
aaa	0.20			0.008		
bbb	0.20			0.008		
ccc	0.08			0.003		
ddd	0.08			0.003		

Table 13-2. 64-lead LQFP Package Dimensions (in mm)

Symbol	Millimeter			Inch		
	Min	**Nom**	**Max**	**Min**	**Nom**	**Max**
A	–	–	1.60	–	–	0.063
A1	0.05	–	0.15	0.002	–	0.006
A2	1.35	1.40	1.45	0.053	0.055	0.057
D	12.00 BSC			0.472 BSC		
D1	10.00 BSC			0.383 BSC		
E	12.00 BSC			0.472 BSC		
E1	10.00 BSC			0.383 BSC		
R2	0.08	–	0.20	0.003	–	0.008
R1	0.08	–	–	0.003	–	–
q	0°	3.5°	7°	0°	3.5°	7°
θ_1	0°	–	–	0°	–	–
θ_2	11°	12°	13°	11°	12°	13°
θ_3	11°	12°	13°	11°	12°	13°
c	0.09	–	0.20	0.004	–	0.008
L	0.45	0.60	0.75	0.018	0.024	0.030
L1	1.00 REF			0.039 REF		
S	0.20	–	–	0.008	–	–
b	0.17	0.20	0.27	0.007	0.008	0.011
e	0.50 BSC.			0.020 BSC.		
D2	7.50			0.285		
E2	7.50			0.285		
Tolerances of Form and Position						
aaa	0.20			0.008		
bbb	0.20			0.008		
ccc	0.08			0.003		
ddd	0.08			0.003		

Figure 13-4. 48-pad QFN Package

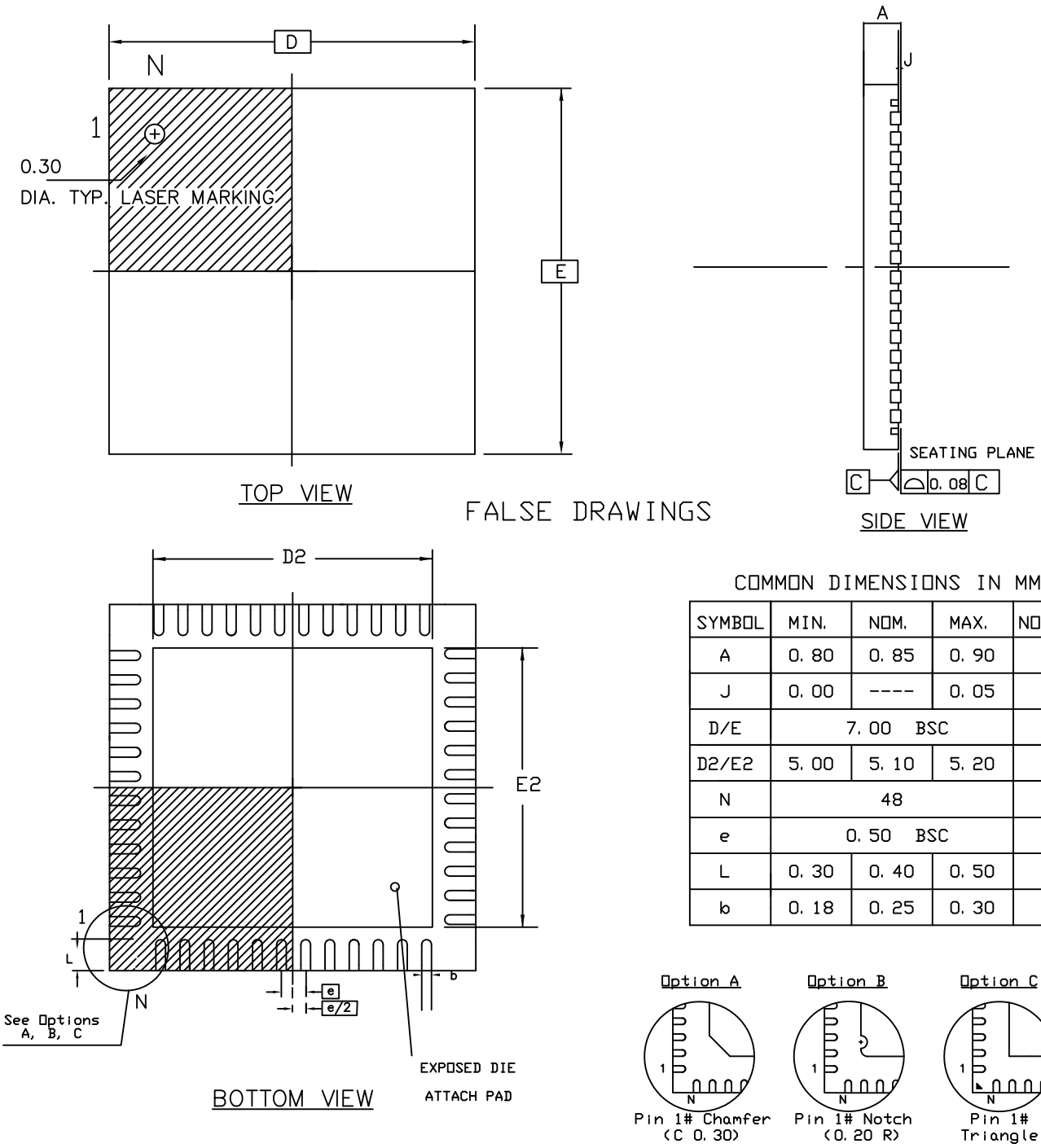

COMMON DIMENSIONS IN MM

SYMBOL	MIN.	NOM.	MAX.	NOTES
A	0.80	0.85	0.90	
J	0.00	----	0.05	
D/E	7.00 BSC			
D2/E2	5.00	5.10	5.20	
N	48			
e	0.50 BSC			
L	0.30	0.40	0.50	
b	0.18	0.25	0.30	

Table 13-3. 48-pad QFN Package Dimensions (in mm)

Symbol	Millimeter			Inch		
	Min	**Nom**	**Max**	**Min**	**Nom**	**Max**
A	–	–	090	–	–	0.035
A1	–	–	0.050	–	–	0.002
A2	–	0.65	0.70	–	0.026	0.028
A3	0.20 REF			0.008 REF		
b	0.18	0.20	0.23	0.007	0.008	0.009
D	7.00 bsc			0.276 bsc		
D2	5.45	5.60	5.75	0.215	0.220	0.226
E	7.00 bsc			0.276 bsc		
E2	5.45	5.60	5.75	0.215	0.220	0.226
L	0.35	0.40	0.45	0.014	0.016	0.018
e	0.50 bsc			0.020 bsc		
R	0.09	–	–	0.004	–	–
Tolerances of Form and Position						
aaa	0.10			0.004		
bbb	0.10			0.004		
ccc	0.05			0.002		

Figure 13-5. 64-pad QFN Package Drawing

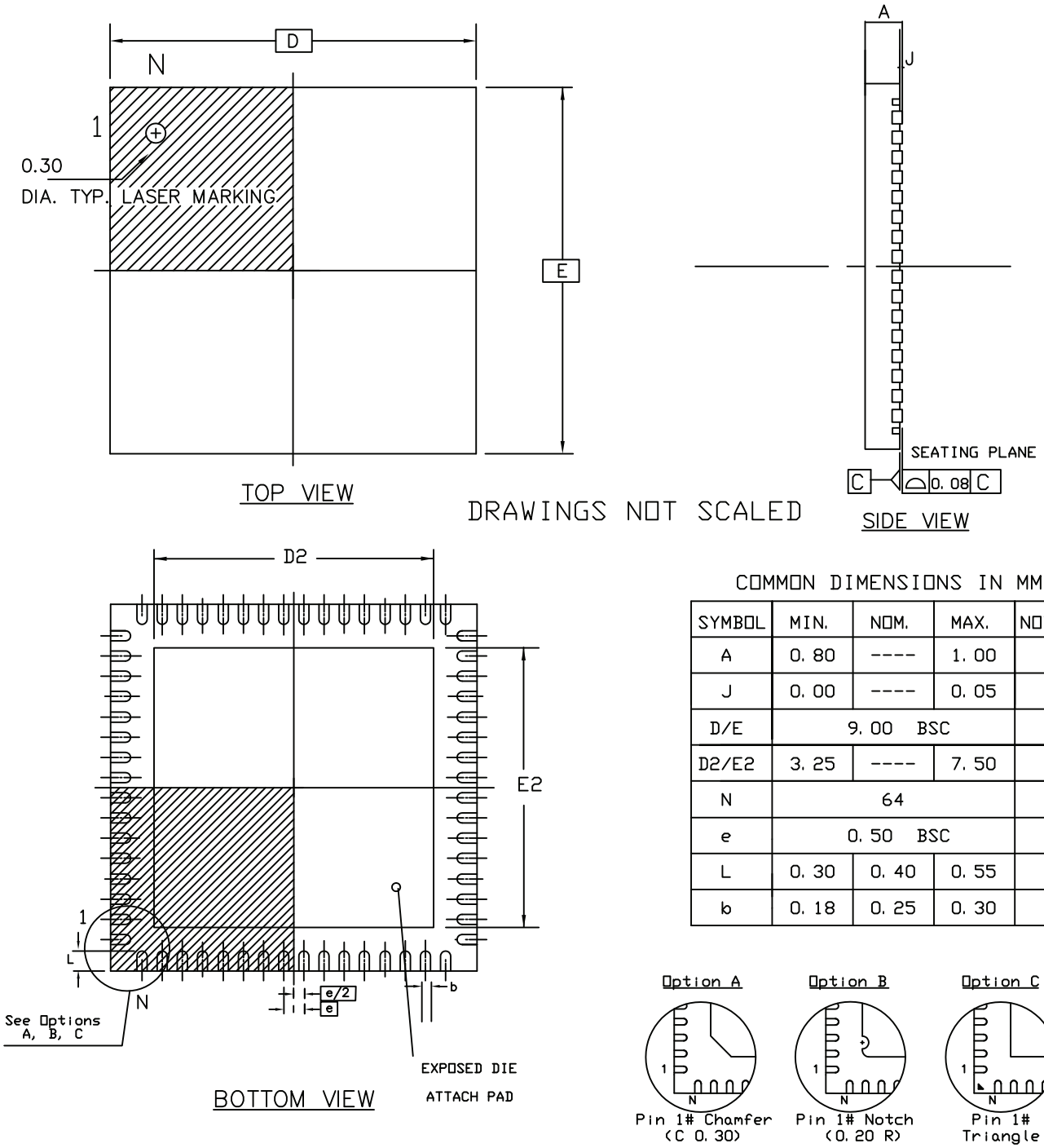

COMMON DIMENSIONS IN MM

SYMBOL	MIN.	NOM.	MAX.	NOTES
A	0.80	----	1.00	
J	0.00	----	0.05	
D/E	9.00 BSC			
D2/E2	3.25	----	7.50	
N	64			
e	0.50 BSC			
L	0.30	0.40	0.55	
b	0.18	0.25	0.30	

14. Ordering Information

Table 14-1. Ordering Codes for SAM3S Devices

Ordering Code	MRL	Flash (Kbytes)	Package (Kbytes)	Package Type	Temperature Operating Range
ATSAM3S4CA-AU	A	256	QFP100	Green	Industrial -40°C to 85°C
ATSAM3S4CA-CU	A	256	BGA100	Green	Industrial -40°C to 85°C
ATSAM3S4BA-AU	A	256	QFP64	Green	Industrial -40°C to 85°C
ATSAM3S4BA-MU	A	256	QFN64	Green	Industrial -40°C to 85°C
ATSAM3S4AA-AU	A	256	QFP48	Green	Industrial -40°C to 85°C
ATSAM3S4AA-MU	A	256	QFN48	Green	Industrial -40°C to 85°C
ATSAM3S2CA-AU	A	128	QFP100	Green	Industrial -40°C to 85°C
ATSAM3S2CA-CU	A	128	BGA100	Green	Industrial -40°C to 85°C
ATSAM3S2BA-AU	A	128	QFP64	Green	Industrial -40°C to 85°C
ATSAM3S2BA-MU	A	128	QFN64	Green	Industrial -40°C to 85°C
ATSAM3S2AA-AU	A	128	QFP48	Green	Industrial -40°C to 85°C
ATSAM3S2AA-MU	A	128	QFN48	Green	Industrial -40°C to 85°C
ATSAM3S1CA-AU	A	64	QFP100	Green	Industrial -40°C to 85°C
ATSAM3S1CA-CU	A	64	BGA100	Green	Industrial -40°C to 85°C
ATSAM3S1BA-AU	A	64	QFP64	Green	Industrial -40°C to 85°C
ATSAM3S1BA-MU	A	64	QFN64	Green	Industrial -40°C to 85°C
ATSAM3S1AA-AU	A	64	QFP48	Green	Industrial -40°C to 85°C
ATSAM3S1AA-MU	A	64	QFN48	Green	Industrial -40°C to 85°C

Revision History

Doc. Rev	Comments	Change Request Ref.
6500CS	Missing PGMD8 to 15 added to Table 4-1, “100-lead LQFP SAM3S4/2/1C Pinout” and Table 4-2, “100-ball LFBGA SAM3S4/2/1C Pinout”.	rfo
	Section 5.7 “Fast Startup” updated.	
	Typo fixed on back page: ‘techincal’ --> ‘technical’.	7536
	Typos fixed in Section 1. “SAM3S Description”.	7524
	Missing title added to Table 14-1.	
	PLLA input frequency range updated in Section 10.5 “Clock Generator”.	7494
	A sentence completed in Section 5.5.2 “Wait Mode”.	7492
	Last sentence removed from Section 9.1.3.10 “SAM-BA® Boot”.	7428
	‘three GPNVM bits’ replaced by ‘two GPNVM bits’ in Section 9.1.3.11 “GPNVM Bits”.	
	Leftover sentence removed from Section 4.1 “SAM3S4/2/1C Package and Pinout”.	7394
6500BS	“Packages” on page 1, package size or pitch updated.	
	Table 1-1, “Configuration Summary”, ADC column updated, footnote gives precision on reserved channel.	7214
	Table 4-2, “100-ball LFBGA SAM3S4/2/1C Pinout”, pinout information is available.	6981
	Figure 5-1, "Single Supply",Figure 5-2, "Core Externally Supplied" , updated notes below figures.	7201
	Figure 5-2, "Core Externally Supplied", Figure 5-3, "Backup Battery", ADC, DAC, Analog Comparator supply is 2.0V-3.6V.	7243/rfo
	Section 12.13 “Analog Comparator”, “Peripherals” on page 1, reference to “window function” removed.	7103
	Section 9.1.3.8 “Unique Identifier”, Each device integrates its own 128-bit unique identifier.	7307
6500AS	First issue	

Headquarters

Atmel Corporation
2325 Orchard Parkway
San Jose, CA 95131
USA
Tel: 1(408) 441-0311
Fax: 1(408) 487-2600

International

Atmel Asia
Unit 1-5 & 16, 19/F
BEA Tower, Millennium City 5
418 Kwun Tong Road
Kwun Tong, Kowloon
Hong Kong
Tel: (852) 2245-6100
Fax: (852) 2722-1369

Atmel Europe
Le Krebs
8, Rue Jean-Pierre Timbaud
BP 309
78054 Saint-Quentin-en-Yvelines Cedex
France
Tel: (33) 1-30-60-70-00
Fax: (33) 1-30-60-71-11

Atmel Japan
9F, Tonetsu Shinkawa Bldg.
1-24-8 Shinkawa
Chuo-ku, Tokyo 104-0033
Japan
Tel: (81) 3-3523-3551
Fax: (81) 3-3523-7581

Product Contact

Web Site
www.atmel.com
www.atmel.com/AT91SAM

Technical Support
AT91SAM Support
Atmel technical support

Sales Contacts
www.atmel.com/contacts/

Literature Requests
www.atmel.com/literature

Disclaimer: The information in this document is provided in connection with Atmel products. No license, express or implied, by estoppel or otherwise, to any intellectual property right is granted by this document or in connection with the sale of Atmel products. **EXCEPT AS SET FORTH IN ATMEL'S TERMS AND CONDITIONS OF SALE LOCATED ON ATMEL'S WEB SITE, ATMEL ASSUMES NO LIABILITY WHATSOEVER AND DISCLAIMS ANY EXPRESS, IMPLIED OR STATUTORY WARRANTY RELATING TO ITS PRODUCTS INCLUDING, BUT NOT LIMITED TO, THE IMPLIED WARRANTY OF MERCHANTABILITY, FITNESS FOR A PARTICULAR PURPOSE, OR NON-INFRINGEMENT. IN NO EVENT SHALL ATMEL BE LIABLE FOR ANY DIRECT, INDIRECT, CONSEQUENTIAL, PUNITIVE, SPECIAL OR INCIDENTAL DAMAGES (INCLUDING, WITHOUT LIMITATION, DAMAGES FOR LOSS OF PROFITS, BUSINESS INTERRUPTION, OR LOSS OF INFORMATION) ARISING OUT OF THE USE OR INABILITY TO USE THIS DOCUMENT, EVEN IF ATMEL HAS BEEN ADVISED OF THE POSSIBILITY OF SUCH DAMAGES.** Atmel makes no representations or warranties with respect to the accuracy or completeness of the contents of this document and reserves the right to make changes to specifications and product descriptions at any time without notice. Atmel does not make any commitment to update the information contained herein. Unless specifically provided otherwise, Atmel products are not suitable for, and shall not be used in, automotive applications. Atmel's products are not intended, authorized, or warranted for use as components in applications intended to support or sustain life.

© 2011 Atmel Corporation. All rights reserved. Atmel®, Atmel logo and combinations thereof, SAM-BA® and others are registered trademarks or trademarks of Atmel Corporation or its subsidiaries. ARM®, ARM®Powered logo, Cortex®, Thumb®-2 and others are registered trademarks or trademarks of ARM Ltd. Other terms and product names may be trademarks of others.