Online data sheet

LBV330-XXANDRAMX2000

LBV300

LEVEL SENSORS

SICK
Sensor Intelligence.

Illustration may differ

Ordering information

Type	Part no.
LBV330-XXANDRAMX2000	6038238

Other models and accessories → www.sick.com/LBV300

Detailed technical data

Features

Medium	Bulk solids
Measurement	Switch
Probe length	2,000 mm
Process pressure	–1 bar ... 25 bar
Process temperature	–50 °C ... +150 °C
Fill material density	≥ 0.008
Particle size	< 10 mm

Performance

Accuracy of sensor element	± 10 mm
Repeatability	≤ 5 mm
Response time	500 ms when covered / 1,000 ms when uncovered

Electronics

Power consumption	5 mA ... 30 mA
Initialization time	< 2 s
VDE protection class 1	✓
Electrical connection	M20 x 1.5
Supply voltage	Double relay (DPDT): 20 V DC ... 72 V DC / 20 V AC ... 253 V AC
Hysteresis	10 mm
Output current	> 10 µA; < 3A AC, 1A DC
Inductive load	750 VA 54 W
Capacitive load	750 VA 54 W
Contact load	Min. 50 mW / max. 750 VA, 54 W
Enclosure rating	IP 66 / IP 67

Mechanics

Process connection	1 1/2" NPT PN 25 / stainless steel 316L
Housing material	Aluminum
Sensor material	Stainless steel 1.4404

Ambient data

Ambient operating temperature	–40 °C ... +80 °C
Ambient storage temperature	–40 °C ... +80 °C

Classifications

ECl@ss 5.0	27273202
ECl@ss 5.1.4	27273202
ECl@ss 6.0	27273202
ECl@ss 6.2	27273202
ECl@ss 7.0	27273202
ECl@ss 8.0	27273202
ECl@ss 8.1	27273202
ECl@ss 9.0	27273202
ETIM 5.0	EC002654
ETIM 6.0	EC002654
UNSPSC 16.0901	41111938

Dimensional drawing (Dimensions in mm (inch))

Temperature adapter

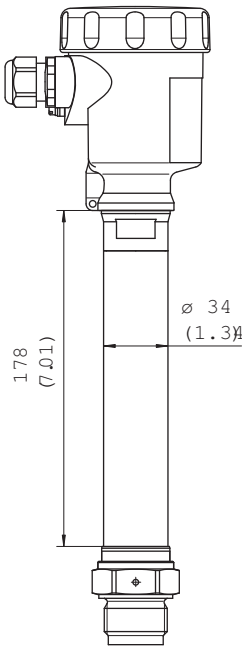

LBV330 threaded version G 1½ A (DIN ISO 228/1)

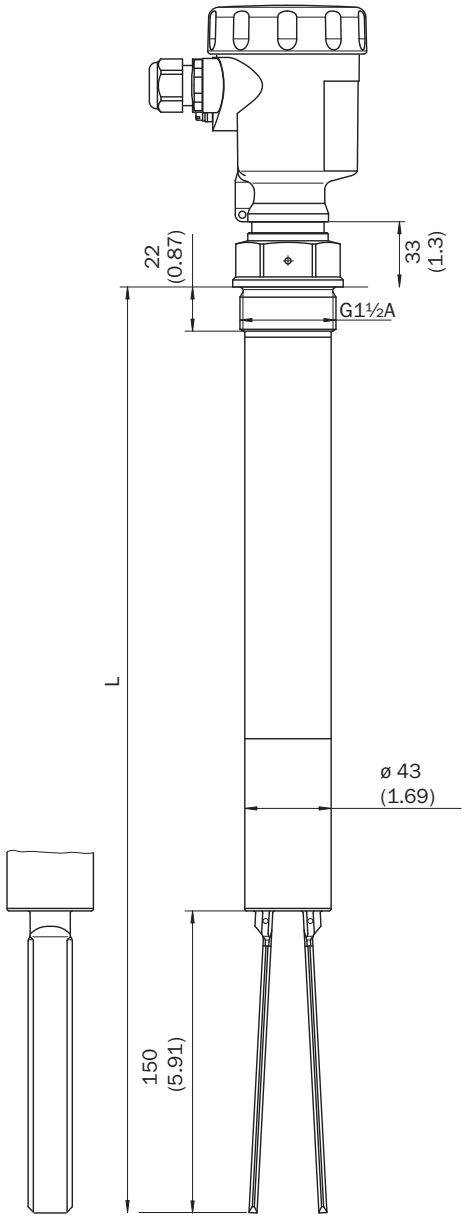

Connection diagram

Double relay connection diagram

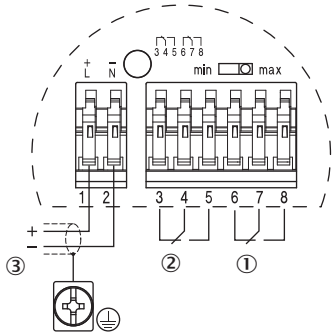

① Relay output
② Relay output
③ Power supply

Instruction for installation

Horizontal mounting

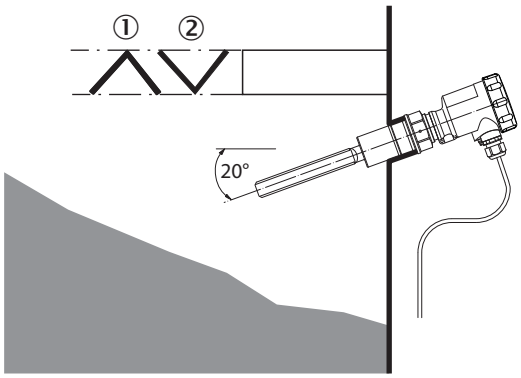

① Protective sheet
② Concave protective sheet for abrasive solids

Recommended accessories

Other models and accessories ➜ www.sick.com/LBV300

	Brief description	Type	Part no.
Mounting brackets and mounting plates			
	Locking screw connection, process pressure –1 bar to 16 bar, process connection G 2 A, inner thread G 1 1/2 A, stainless steel 316L	BEF-MU-316G20-ALBV	5322462
Electronic modules			
	Double relay (DPDT): 20 V DC ... 72 V DC / 20 ... 250 V AC	ECD-RE-LB-VREL-0001	6038666

SICK AT A GLANCE

SICK is one of the leading manufacturers of intelligent sensors and sensor solutions for industrial applications. A unique range of products and services creates the perfect basis for controlling processes securely and efficiently, protecting individuals from accidents and preventing damage to the environment.

We have extensive experience in a wide range of industries and understand their processes and requirements. With intelligent sensors, we can deliver exactly what our customers need. In application centers in Europe, Asia and North America, system solutions are tested and optimized in accordance with customer specifications. All this makes us a reliable supplier and development partner.

Comprehensive services complete our offering: SICK LifeTime Services provide support throughout the machine life cycle and ensure safety and productivity.

For us, that is "Sensor Intelligence."

WORLDWIDE PRESENCE:

Contacts and other locations –www.sick.com

SICK
Sensor Intelligence.