THIS DRAWING IS UNPUBLISHED. RELEASED FOR PUBLICATION 20
© COPYRIGHT 20 BY - ALL RIGHTS RESERVED.

REVISIONS

P	LTR	DESCRIPTION	DATE	DWN	APVD
	C	ECR-15-008603	23JUN2015	KG	DW

1. PACKAGED LOOSE PIECE.

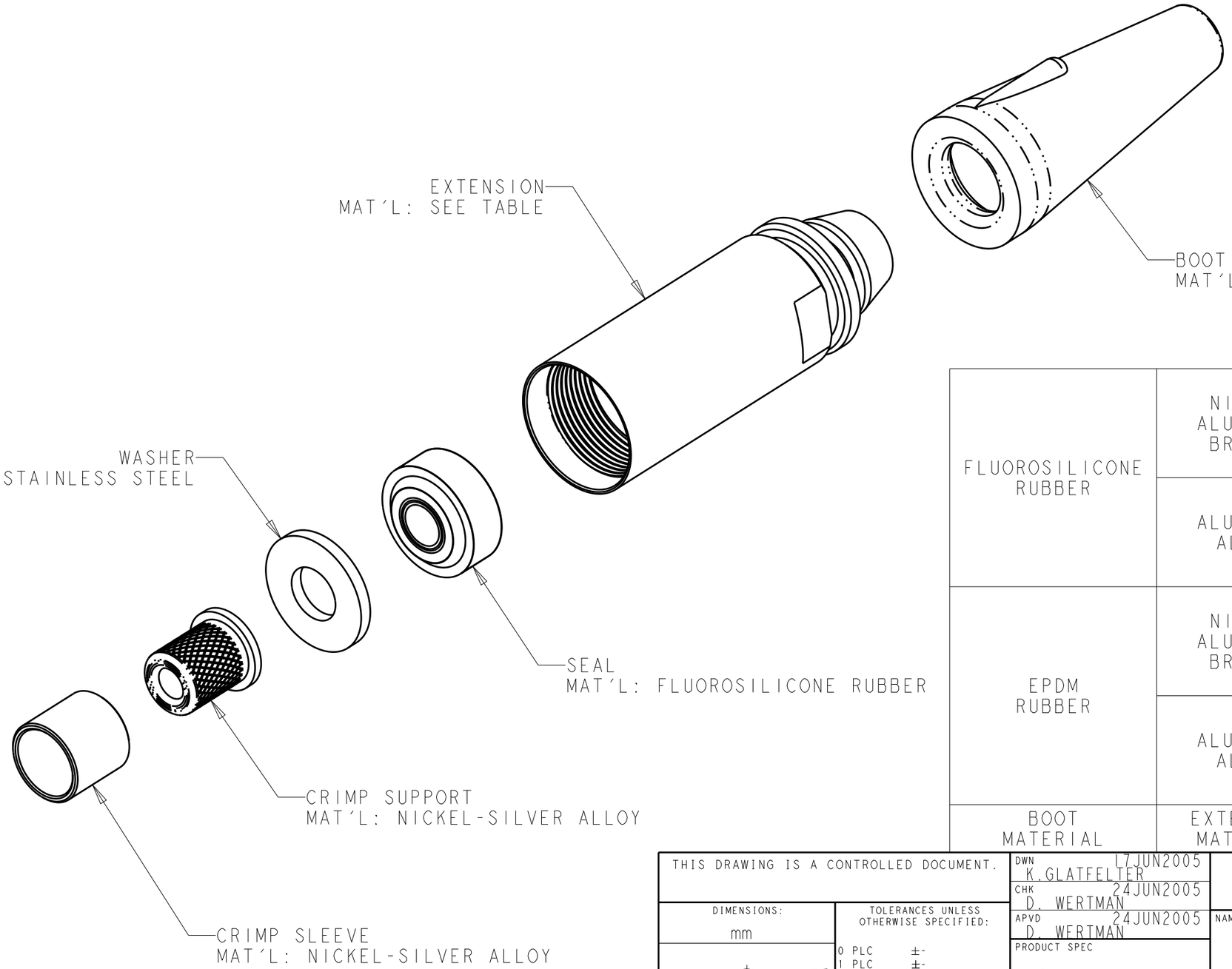

BOOT MATERIAL	EXTENSION MATERIAL	MAXIMUM CABLE SIZE	PART NUMBER
FLUOROSILICONE RUBBER	NICKEL ALUMINUM BRONZE	6.7mm	1-1828700-6
		6.2mm	1-1828700-5
		5.6mm	1-1828700-4
		5.1mm	1-1828700-3
	ALUMINUM ALLOY	6.7mm	1-1828700-2
		6.2mm	1-1828700-1
		5.6mm	1-1828700-0
		5.1mm	1828700-9
EPDM RUBBER	NICKEL ALUMINUM BRONZE	6.7mm	1828700-8
		6.2mm	1828700-7
		5.6mm	1828700-6
		5.1mm	1828700-5
	ALUMINUM ALLOY	6.7mm	1828700-4
		6.2mm	1828700-3
		5.6mm	1828700-2
		5.1mm	1828700-1

THIS DRAWING IS A CONTROLLED DOCUMENT.

DIMENSIONS: mm

TOLERANCES UNLESS OTHERWISE SPECIFIED:
0 PLC ±-
1 PLC ±-
2 PLC ±-
3 PLC ±-
4 PLC ±-
ANGLES ±-

MATERIAL: AS LISTED -

FINISH: HARD ANODIZE (Al ONLY)

DWN K.GLATFELTER 17JUN2005
CHK D. WERTMAN 24JUN2005
APVD D. WERTMAN 24JUN2005
PRODUCT SPEC -
APPLICATION SPEC -
WEIGHT -

TE Connectivity

NAME: CABLE ADAPTER KIT, PLUG PRO BEAM MINI -

SIZE	CAGE CODE	DRAWING NO	RESTRICTED TO
A3	00779	C-1828700	-

Customer Drawing | SCALE 2:1 | SHEET 1 OF 1 | REV C

1470-19 (3/13)