MIC2843

High-Efficiency 6-Channel Linear WLED Driver with Ultra-Fast PWM™ Control

General Description

The MIC2843 is a high-efficiency linear white LED (WLED) driver designed to drive up to six WLEDs, greatly extending battery life for portable display backlighting, keypad backlighting, and camera flash in mobile devices. The MIC2843 provides the highest possible efficiency as this architecture has no switching losses present in traditional charge pumps or inductive boost circuits. The MIC2843 provides six linear drivers which maintain constant current for up to six WLEDs. It features a typical dropout of less than 40mV at 20mA. This allows the WLEDs to be driven directly from the battery eliminating switching noise/losses present with the use of boost circuitry.

The six channels are matched better than ±3% typical, ensuring uniform display illumination under all conditions. The brightness is controlled through an Ultra Fast PWM™ interface operating down to less than 1% duty cycle.

The MIC2843 is available in the 2mm x 2mm 10-pin Thin MLF® leadless package with a junction temperature range of –40°C to +125°C.

Datasheets and support documentation can be found on Micrel's web site at: www.micrel.com.

Features

- High efficiency (no voltage boost losses)
- Ultra Fast PWM™ control (200Hz to 500kHz)
- Input voltage range: 3.0V to 5.5V
- Dropout of less than 40mV at 20mA
- Matching better than ±3% (typical)
- Current accuracy better than ±1.5% (typical)
- Maintains proper regulation regardless of how many channels are utilized
- Available in a 2mm x 2mm 10-pin Thin MLF® package

Applications

- Mobile handsets
- Digital cameras
- Portable media/MP3 players
- Portable navigation devices (GPS)
- Portable applications

Typical Application

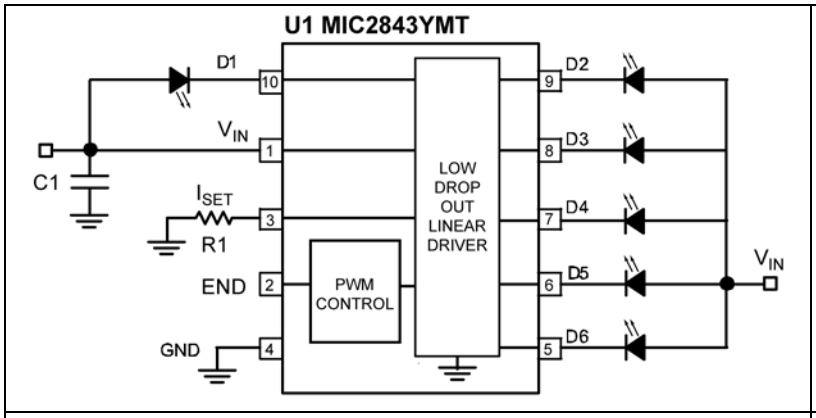

LCD Display Backlight with Six WLEDs

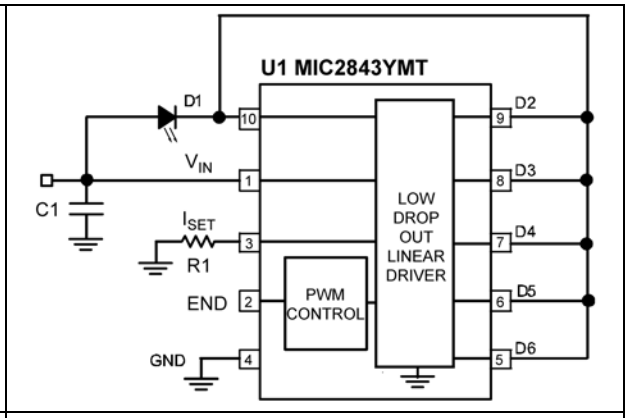

High Current Flash Driver

Ultra Fast PWM is a trademark of Micrel, Inc.
MLF and *Micro*LeadFrame are registered trademark Amkor Technology Inc.

Micrel Inc. • 2180 Fortune Drive • San Jose, CA 95131 • USA • tel +1 (408) 944-0800 • fax + 1 (408) 474-1000 • http://www.micrel.com

Ordering Information

Part Number	Mark Code[1]	Temperature Range	Package[2]
MIC2843YMT	YS3	–40°C to +125°C	10-Pin 2mm x 2mm Thin MLF®

Note:

1. Thin MLF® ▲ = Pin 1 identifier.
2. Thin MLF® is a GREEN RoHS-compliant package. Lead finish is NiPdAu. Mold compound is halogen free.

Pin Configuration

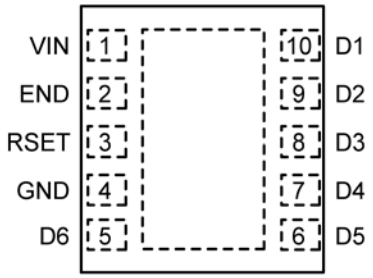

10-Pin 2mm x 2mm Thin MLF® (MT)
(Top View)

Pin Description

Pin Number	Pin Name	Pin Function
1	VIN	Voltage Input. Connect at least 1µF ceramic capacitor between V_{IN} and GND.
2	END	Enable LED drivers. This pin can be used as a PWM input for dimming of WLEDs. Do not leave floating.
3	R_{SET}	An internal 1.27V reference sets the nominal maximum WLED current. Example, apply a 20.5kΩ resistor between R_{SET} and GND to set LED current to 20mA at 100% duty cycle.
4	GND	Ground.
5	D6	LED6 driver input. Connect LED anode to VIN and cathode to this pin.
6	D5	LED5 driver input. Connect LED anode to VIN and cathode to this pin.
7	D4	LED4 driver input. Connect LED anode to VIN and cathode to this pin.
8	D3	LED3 driver input. Connect LED anode to VIN and cathode to this pin.
9	D2	LED2 driver input. Connect LED anode to VIN and cathode to this pin.
10	D1	LED1 driver input. Connect LED anode to VIN and cathode to this pin.
EPAD	HS PAD	Heat sink pad. Not internally connected. Connect to ground.

Absolute Maximum Ratings[1]

Main Input Voltage (V_{IN}) ..... –0.3V to +6V
Enable Input Voltage (V_{END}) ..... –0.3V to +6V
Current Source Voltage (V_{D1-D6}) ..... –0.3V to +6V
Power Dissipation ..... Internally Limited
Lead Temperature (soldering, 10sec.) ..... 260°C
Storage Temperature (T_s) ..... –65°C to +150°C
ESD Rating[3] ..... ESD Sensitive

Operating Ratings[2]

Supply Voltage (V_{IN}) ..... +3.0V to +5.5V
Enable Input Voltage (V_{END}) ..... 0V to V_{IN}
Current Source Voltage (V_{D1-D6}) ..... 0V to V_{IN}
Junction Temperature (T_J) ..... –40°C to +125°C
Junction Thermal Resistance
2mm x 2mm Thin MLF®-10L (θ_{JA}) ..... 90°C/W

Electrical Characteristics

WLED Linear Drivers

$V_{IN} = V_{END} = 3.8V$, $R_{SET} = 20.5k\Omega$; $V_{D1-D6} = 0.6V$; $T_J = 25°C$, **bold** values indicate $–40°C \le T_J \le 125°C$; unless noted.

Parameter	Conditions	Min.	Typ.	Max.	Units
Current Accuracy[4]	$V_{DROPNOM} = 0.6V$		1.5		%
Matching[5]	$V_{DROPNOM} = 0.6V$		3	**5.5**	%
Drop-out	Where I_{LED} = 90% of LED current seen at $V_{DROPNOM} = 0.6V$, 100% brightness level		40	**100**	mV
Ground/Supply Bias Current	$I_{OUT} = 20mA$		1.4		mA
Shutdown Current (Current Source Leakage)	$V_{END} = 0V$		0.01	1	µA
PWM Dimming					
Enable Input Voltage (V_{END})	Logic Low			**0.2**	V
	Logic High	**1.2**			V
Enable Input Current	$V_{IH} \ge 1.2V$		0.01	**1**	µA
Current Source Delay (50% levels)	Shutdown to On Standby to On On to Standby $R_{SET} = 20.5k$		40 0.5 1	60	µs µs µs
Current Source Transient Time (10% – 90%)	T_{RISE} T_{FALL}		1 0.3		µs µs
Standby to Shutdown Time	$V_{END} = 0V$	10	20	40	ms

Notes:

1. Exceeding the absolute maximum rating may damage the device.
2. The device is not guaranteed to function outside its operating rating.
3. Devices are ESD sensitive. Handling precautions recommended. Human body model, 1.5kΩ in series with 100pF.
4. As determined by average current of all channels in use and all channels loaded.
5. The current through each LED meets the stated limits from the average current of all LEDs.

Typical Characteristics

Average ILED vs. Duty Cycle

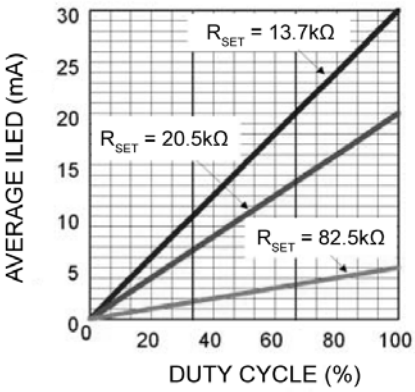

Peak LED Current vs. RSET

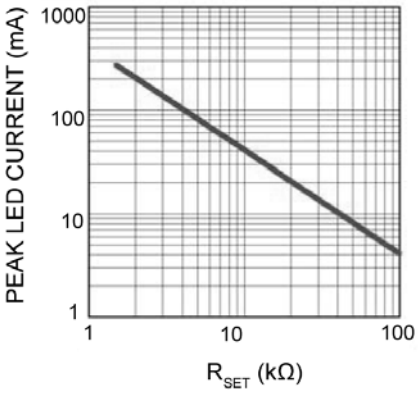

Six Parallel Channels Current vs. RSET

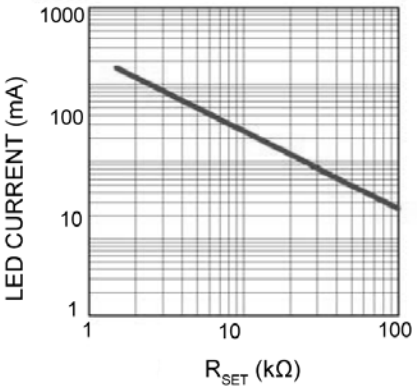

Current Sink Dropout Voltage vs. Temperature

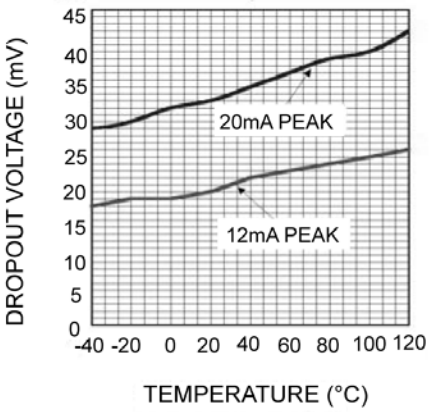

Current Sink Dropout vs. Load Current

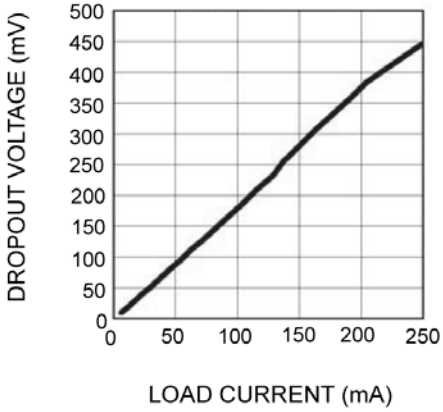

Six Parallel Current Sink Dropout vs. Load Current

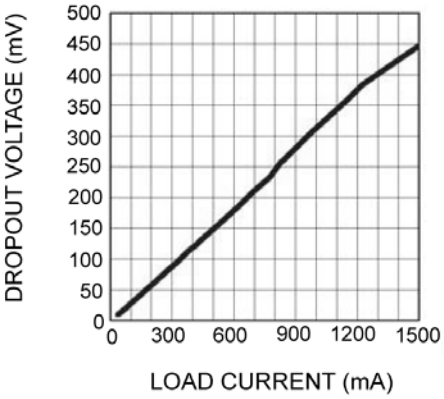

20mA Peak ILED vs. Battery Voltage

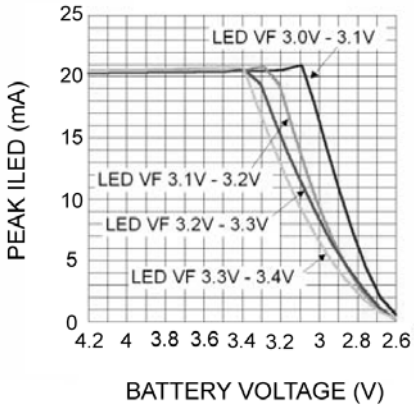

LED Matching vs. Temperature

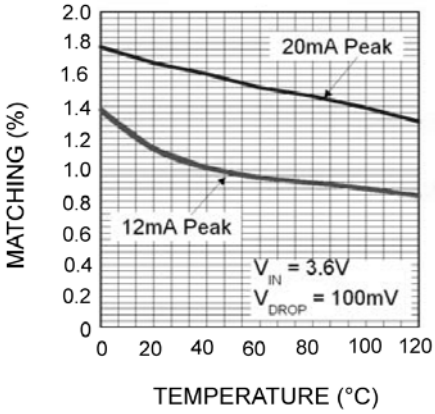

LED Current vs. Temperature

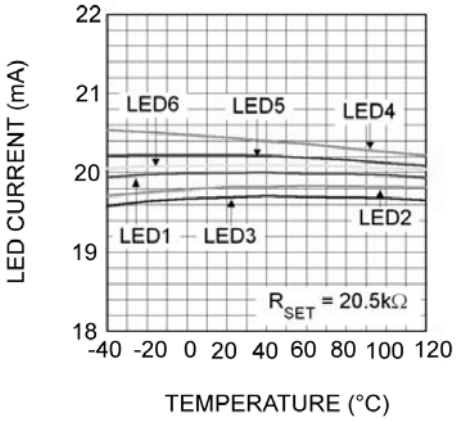

Typical Characteristics (Continued)

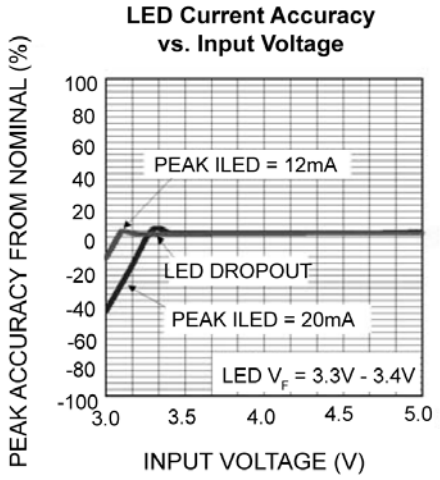

Functional Characteristics

PWM Signal at 1% Duty Cycle (I_{AVG} = 0.2mA)

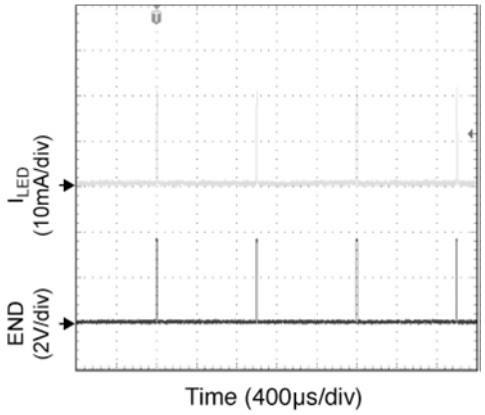

PWM Signal at 20% Duty Cycle (I_{AVG} = 4mA)

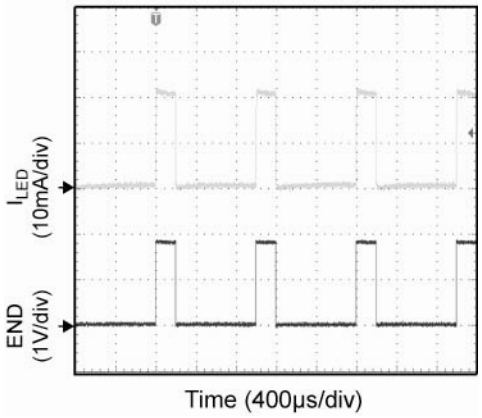

PWM Signal at 50% Duty Cycle (I_{AVG} = 10mA)

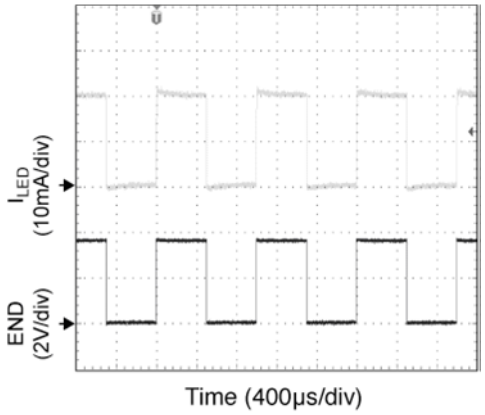

PWM Signal at 80% Duty Cycle (I_{AVG} = 16mA)

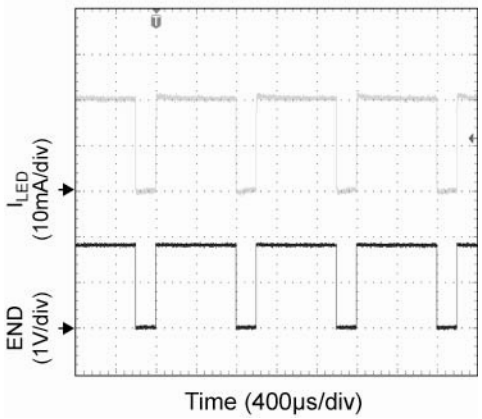

PWM Signal at 100% Duty Cycle (I_{AVG} = 20mA)

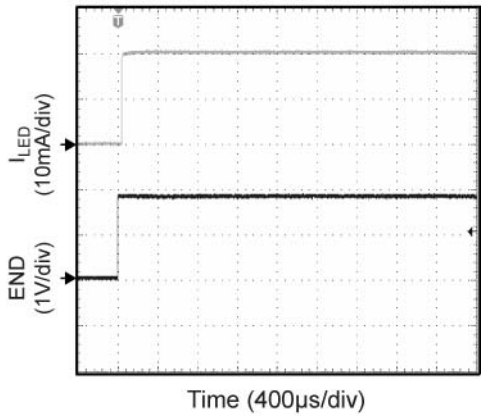

Functional Characteristics

LED Startup into 10% Duty Cycle

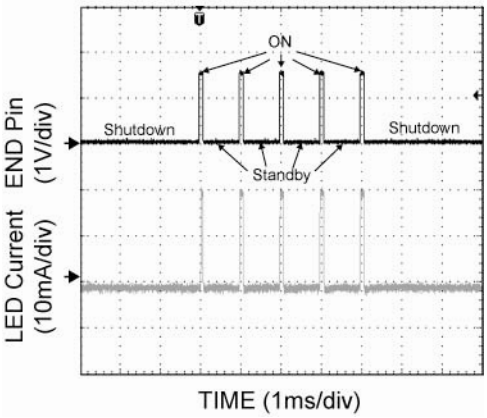

Current Sink ON Time (Shutdown to ON)

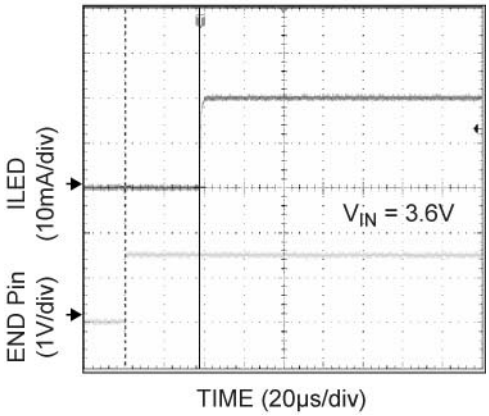

Current Sink Rising Edge (Standby to ON)

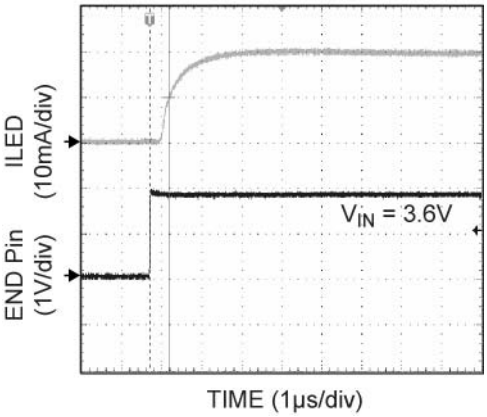

Current Sink Falling Edge (ON to Standby)

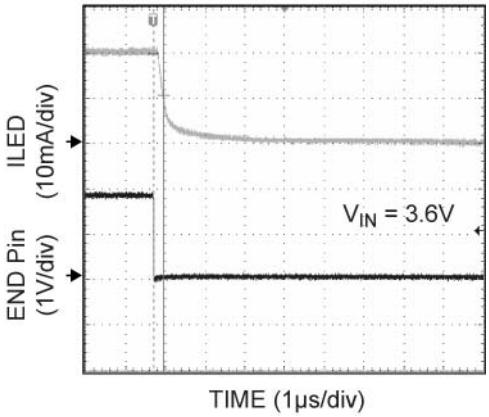

Current Sink OFF Time (ON to Shutdown)

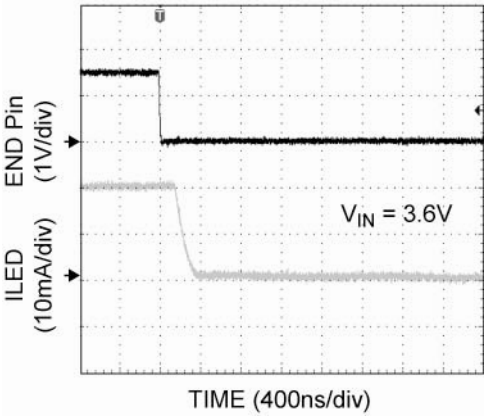

Functional Diagram

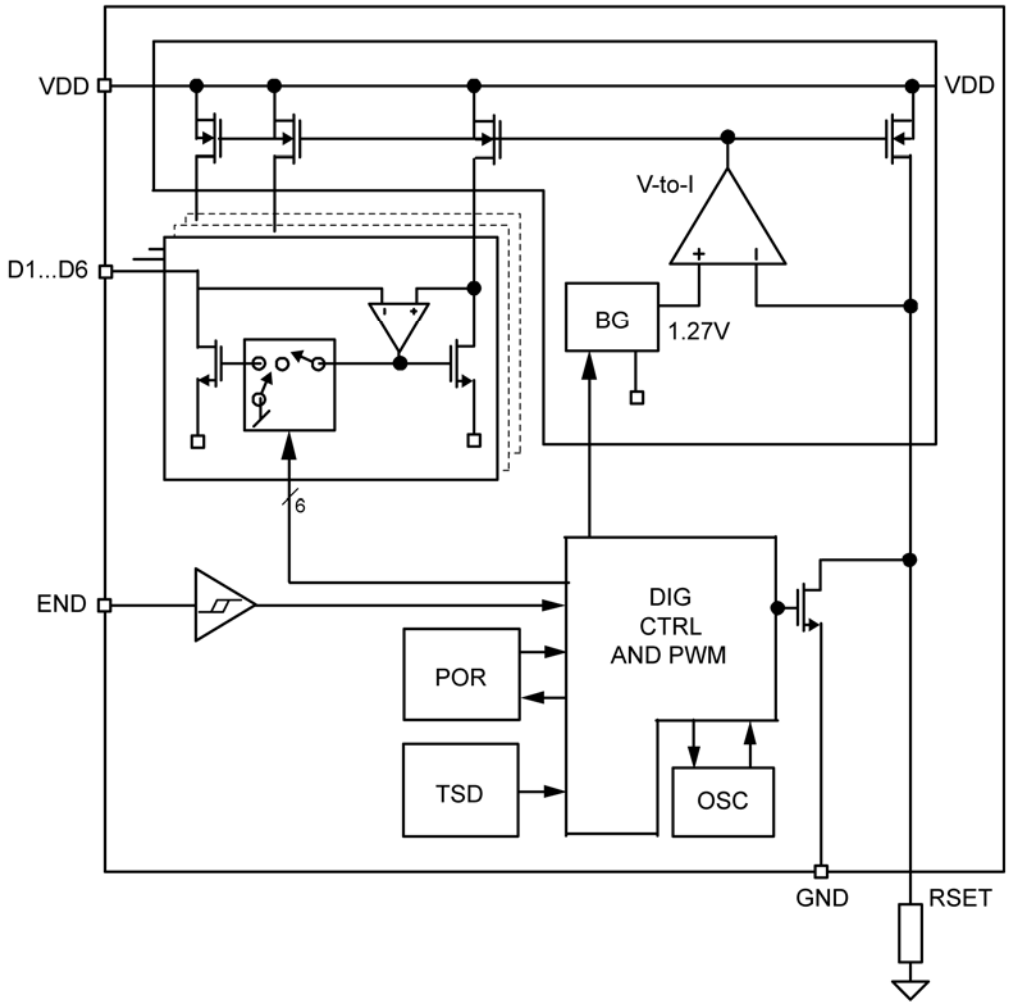

Figure 1. MIC2843 Functional Block Diagram

Functional Description

The MIC2843 is a six-channel WLED driver. The WLED driver is designed to maintain proper current regulation with LED current accuracy of 1.5% while the typical matching between the six channels to be 3% at room temperature. The WLEDs are driven independently from the input supply and will maintain regulation with a dropout of 40mV at 20mA. The low dropout of the linear drivers allows the WLEDs to be driven directly from the battery voltage and eliminates the need for large and inefficient charge pumps. The maximum WLED current for each channel is set via an external resistor. If dimming is desired the MIC2843 can dim via an Ultra Fast PWM™ signal.

Block Diagram

As shown in Figure 1, the MIC2843 consists of six current mirrors set to copy a master current determined by R_{SET}. The linear drivers have a designated control block for enabling and dimming of the WLEDs. The MIC2843 is controlled by the PWM control block that receives PWM signals for dimming.

VIN

The input supply (V_{IN}) provides power to the linear drivers and the control circuitry. The V_{IN} operating range is 3V to 5.5V. Due to wire inductance a minimum bypass capacitor of 1µF should be placed close to input (VIN) pin and the ground (GND) pin. Refer to the *Layout Recommendations* section for details on placing the input capacitor (C1).

END

The END pin is equivalent to the enable pin for the linear drivers on the MIC2843. It can also be used for dimming using a PWM signal. See the “PWM Dimming Interface” in the *Application Information* section for details.

The first pulse on the END pin must be equal or greater to 40µs to wake the part up in a known state. This equates to a 12.5kHz PWM signal at equal or greater than 50% duty cycle. Higher PWM frequencies may be used but the first pulse must be equal or greater than 40µs.

R_{SET}

The R_{SET} pin is used by connecting a R_{SET} resistor to ground to set the peak current of the linear drivers. The average LED current can be calculated by Equation 1 below:

$$I_{LED}\,(mA) = 410 \times D / R_{SET}\,(k\Omega) \qquad \text{Eq. 1}$$

D is the duty cycle of the LED current during PWM dimming. When the device is fully on the duty cycle equals 100% (D = 1). A plot of I_{LED} versus R_{SET} is shown in Figure 2.

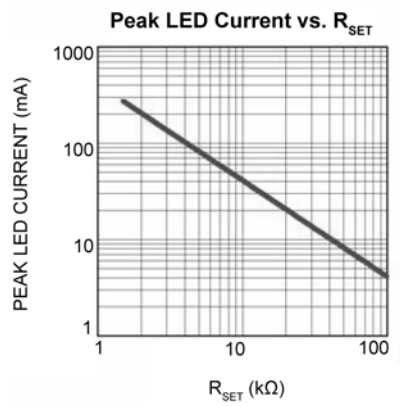

Figure 2. Peak LED Current vs. R_{SET}

D1-D6

The D1 through D6 pins are the linear driver inputs for WLED 1 through 6, respectively. Connect the anodes of the WLEDs to V_{IN} and each cathode of the WLEDs to D1 through D6. The linear drivers are independent of each other.

GND

The ground pin is the ground path for the linear drivers. The current loop for the ground should be as small as possible. The ground of the input capacitor should be routed with low impedance traces to the GND pin and made as short as possible. Refer to the *Layout Recommendations* section for more details.

Application Information

Ultra Fast PWM™ Dimming Interface

The MIC2843 can receive PWM signals from the END pin for WLED dimming. Dimming is generated by pulsing the WLEDs on and off in synchronization with the PWM signal. The MIC2843 supports PWM frequencies from 200Hz to 500kHz. For PWM frequencies between 200Hz – 20kHz the MIC2843 supports a duty cycle range from 1% to 100%. The MIC2843 supports Ultra Fast PWM™ frequencies from 20kHz to 500kHz with a duty cycle of 10% and greater. MIC2843 incorporates an internal shutdown delay to ensure that the internal control circuitry remains active during PWM dimming for optimum Ultra Fast PWM™ performance. Due to input PWM signal propagation delay Ultra Fast PWM™ signals have a non-linear relationship between the duty cycle and the average LED current (Figures 3 and 4). With the Ultra Fast PWM™ frequencies, lower duty cycles may degrade the matching between LEDs, and should be limited to the minimum duty cycle, as indicated in Figure 5. Due to the shutdown-to-on delay of 60µs, at Ultra Fast PWM™ frequencies above 15kHz, a logic high enable signal is required to first wake up prior to PWM dimming. Figures 6 through 10 illustrate the WLED current response when a PWM signal is applied to the END pin.

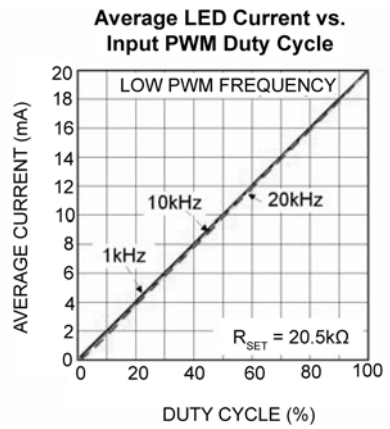

Figure 3. Average Current per LED Dimming by Changing PWM Duty Cycle for PWM Frequencies up to 20kHz

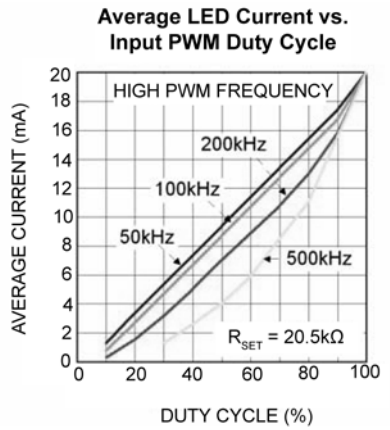

Figure 4. Average Current per LED Dimming by Changing PWM Duty Cycle for PWM Frequencies from 50kHz to 500kHz

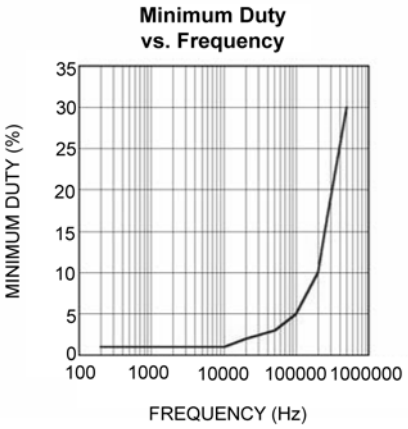

Figure 5. Minimum Duty Cycle for Varying PWM Frequency

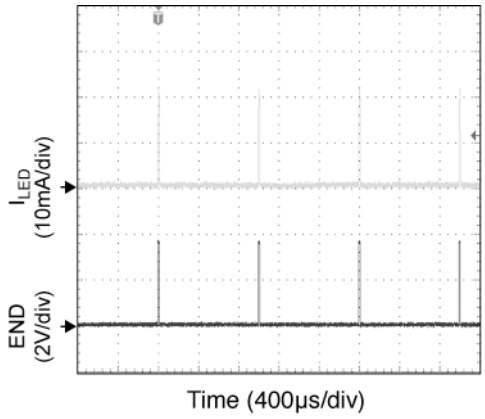

Figure 6. PWM Signal at 1% Duty Cycle (Iavg = 0.2mA)

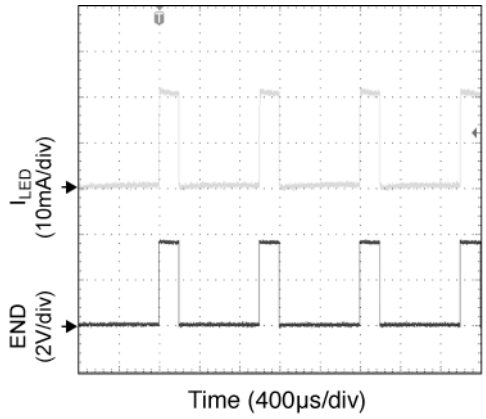

Figure 7. PWM Signal at 20% Duty Cycle (Iavg = 4mA)

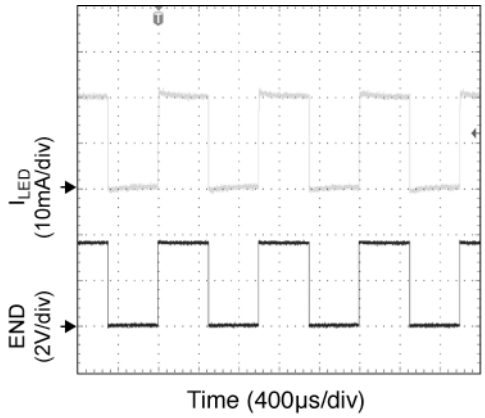

Figure 8. PWM Signal at 50% Duty Cycle (I_{avg} = 10mA)

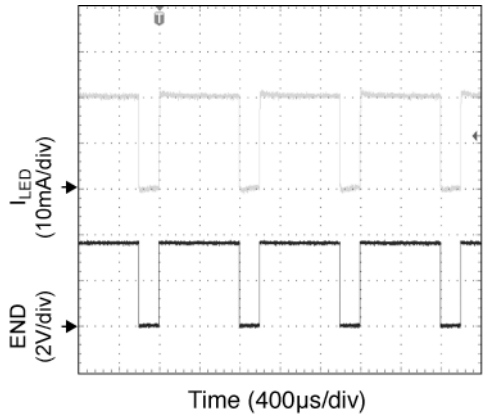

Figure 9. PWM Signal at 80% Duty Cycle (I_{avg} = 16mA)

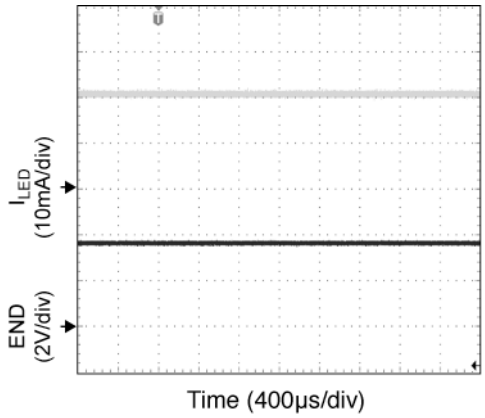

Figure 10. PWM Signal at 100% Duty Cycle (I_{avg} = 20mA)

High-Current Parallel Operation

The linear drivers are independent of each other, and can be used individually or paralleled for larger current. A single WLED can be driven with all six linear drivers by connecting D1 through D6 together with the cathode of the WLED as shown in Figure 11. This will generate a current six times the LED current setting and can be used for higher current WLEDs such as those used in flash or torch applications.

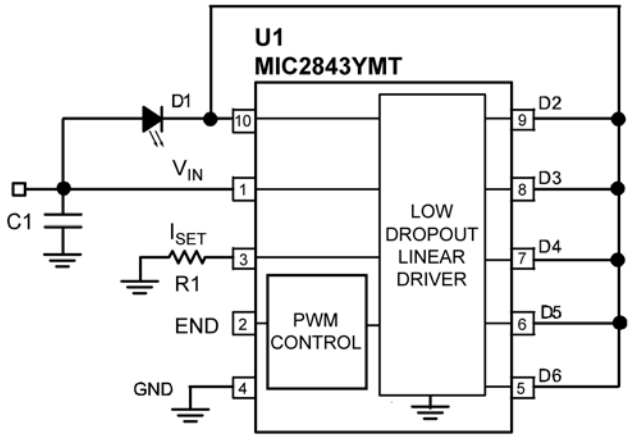

Figure 11. Six-Channel (Parallel) Application Circuit

The current is set by the R_{SET} resistor, and can be calculated by the following equation:

$$I_{LED}\,(mA) = 6 * 410 * D / R_{SET}\,(k\Omega).$$

D is the duty cycle of the LED current during PWM dimming. When the device is fully on the duty cycle equals 100% (D = 1). Figure 12 shows the response time of the six paralleled linear drivers to the enable signal, while Figure 13 shows the turn off response. With a R_{SET} resistor of 1.65k, each linear driver is set to 250mA, with all 6 linear drivers connected in parallel, the MIC2843 is capable of driving a total current of 1.5A.

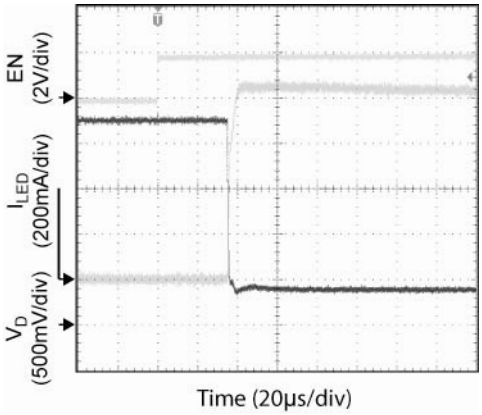

Figure 12. Current Response Time to Enable Signal Turning On (Six Paralleled Channels)

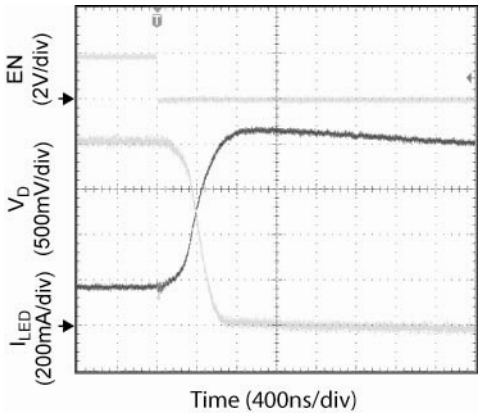

Figure 13. Current Response Time to Enable Signal Turning Off (Six Paralleled Channels)

Input Capacitor

The MIC2843 is a high-performance, high-bandwidth device. Stability can be maintained using a ceramic input capacitor of 1µF. Low-ESR ceramic capacitors provide optimal performance at a minimum amount of space. Additional high-frequency capacitors, such as small-valued NPO dielectric-type capacitors, help filter out high-frequency noise and are good practice in any noise-sensitive circuit. X5R or X7R dielectrics are recommended for the input capacitor. Y5V dielectrics lose most of their capacitance over temperature and are therefore, not recommended.

MIC2843 Typical Application Circuit

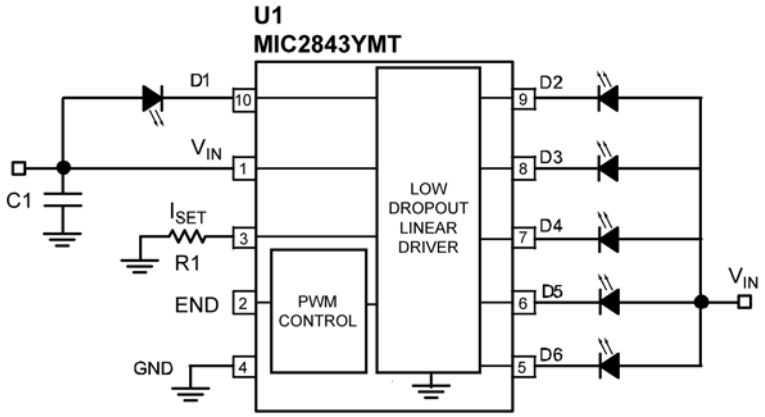

Bill of Materials

Item	Part Number	Manufacturer	Description	Qty.
C1	C1608X5R0J105K	TDK[1]	1µF Ceramic Capacitor, 6.3V, X5R, Size 0603	1
R1	CRCW06032052FT1	Vishay[2]	20.5kΩ, 1%, Size 0603	1
U1	**MIC2843YMT**	**Micrel, Inc.[3]**	**High-Efficiency Six-Channel Linear WLED Driver with Ultra-Fast PWM™ Control**	**1**

Notes:

1. TDK: www.tdk.com.
2. Vishay: www.vishay.com.
3. **Micrel, Inc.: www.micrel.com.**

PCB Layout Recommendations

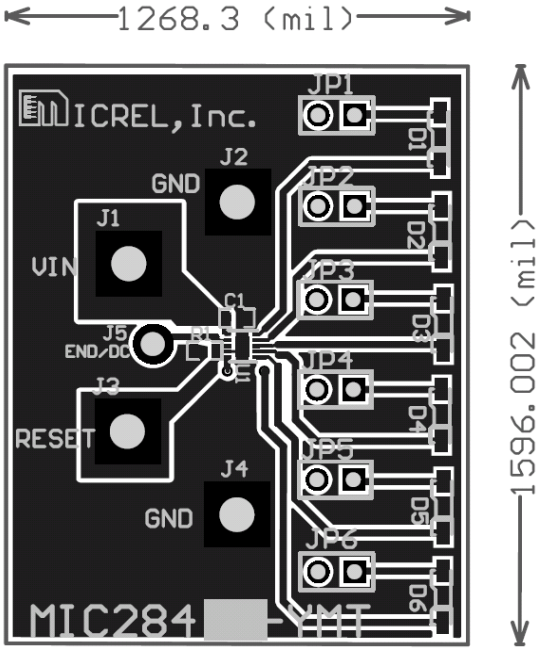

Top Layer

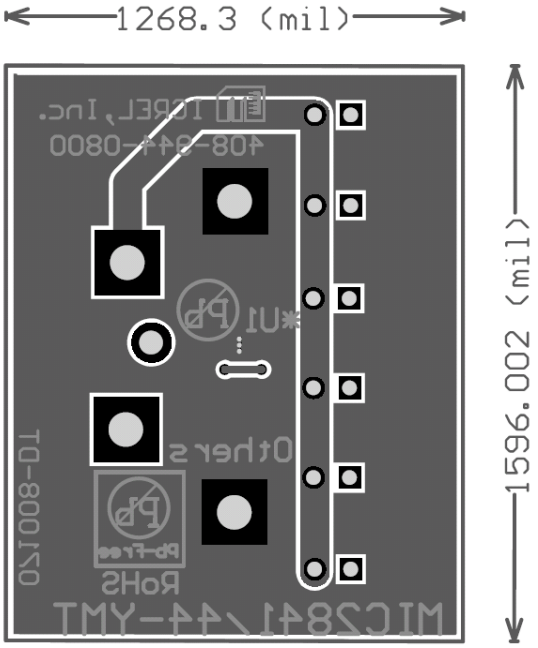

Bottom Layer

Package Information

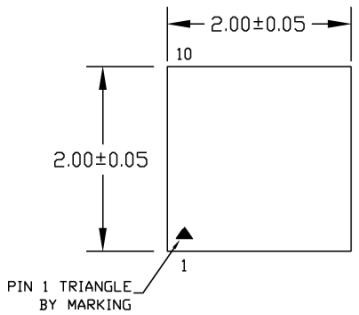

TOP VIEW

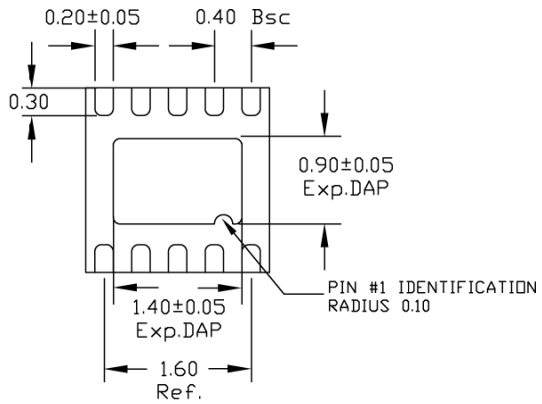

BOTTOM VIEW

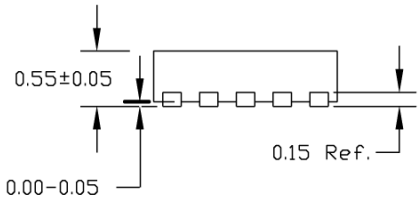

SIDE VIEW

NOTE:
1. ALL DIMENSIONS ARE IN MILLIMETERS.
2. MAX. PACKAGE WARPAGE IS 0.08 mm.
3. MAXIMUM ALLOWABE BURRS IS 0.08 mm IN ALL DIRECTIONS.
4. PIN #1 ID WILL BE LASER MARKED.

10-Pin (2mm x 2mm) Thin MLF® (MT)

MICREL, INC. 2180 FORTUNE DRIVE SAN JOSE, CA 95131 USA
TEL +1 (408) 944-0800 FAX +1 (408) 474-1000 WEB http://www.micrel.com

Micrel makes no representations or warranties with respect to the accuracy or completeness of the information furnished in this data sheet. This information is not intended as a warranty and Micrel does not assume responsibility for its use. Micrel reserves the right to change circuitry, specifications and descriptions at any time without notice. No license, whether express, implied, arising by estoppel or otherwise, to any intellectual property rights is granted by this document. Except as provided in Micrel's terms and conditions of sale for such products, Micrel assumes no liability whatsoever, and Micrel disclaims any express or implied warranty relating to the sale and/or use of Micrel products including liability or warranties relating to fitness for a particular purpose, merchantability, or infringement of any patent, copyright or other intellectual property right

Micrel Products are not designed or authorized for use as components in life support appliances, devices or systems where malfunction of a product can reasonably be expected to result in personal injury. Life support devices or systems are devices or systems that (a) are intended for surgical implant into the body or (b) support or sustain life, and whose failure to perform can be reasonably expected to result in a significant injury to the user. A Purchaser's use or sale of Micrel Products for use in life support appliances, devices or systems is a Purchaser's own risk and Purchaser agrees to fully indemnify Micrel for any damages resulting from such use or sale.

© 2008 Micrel, Incorporated.