LMK1C110x 1.8-V, 2.5-V, and 3.3-V LVCMOS Clock Buffer Family

1 Features

- High-performance 1:4 LVCMOS clock buffer
- Very low output skew < 50 ps
- Extremely low additive jitter < 50-fs maximum
  - 7.5-fs typical at V_{DD} = 3.3 V
  - 10-fs typical at V_{DD} = 2.5 V
  - 19.2-fs typical at V_{DD} = 1.8 V
- Very low propagation delay < 3 ns
- Synchronous output enable
- Supply voltage: 3.3-V, 2.5-V, or 1.8-V
  - 3.3-V tolerant input at all supply voltages
- f_{max} = 250 MHz for 3.3 V
  f_{max} = 200-MHz for 2.5 V and 1.8 V
- Operating temperature range: –40°C to 125°C
- Available in 8-pin TSSOP package

2 Applications

- Factory automation & control
- Telecommunications equipment
- Data center & enterprise computing
- Grid infrastructure
- Motor drives
- Medical imaging

3 Description

The LMK1C110x is a modular, high-performance, low-skew, general-purpose clock buffer family from Texas Instruments.

The entire family is designed with a modular approach in mind.

All of the devices within this family are pin-compatible to each other and backwards compatible to the CDCLVC110x family for easy handling.

All family members share the same high performing characteristics such as low additive jitter, low skew, and wide operating temperature range.

The LMK1C110x supports a synchronous output enable control (1G) which switches the outputs into a low state when 1G is low.

The LMK1C110x family operates in a 1.8-V, 2.5-V and 3.3-V environment and are characterized for operation from –40°C to 125°C.

Device Information(1)

PART NUMBER	PACKAGE	BODY SIZE (NOM)
LMK1C1104PW	TSSOP (8)	3.00 mm × 4.40 mm

(1) For all available packages, see the orderable addendum at the end of the data sheet.

Functional Block Diagram

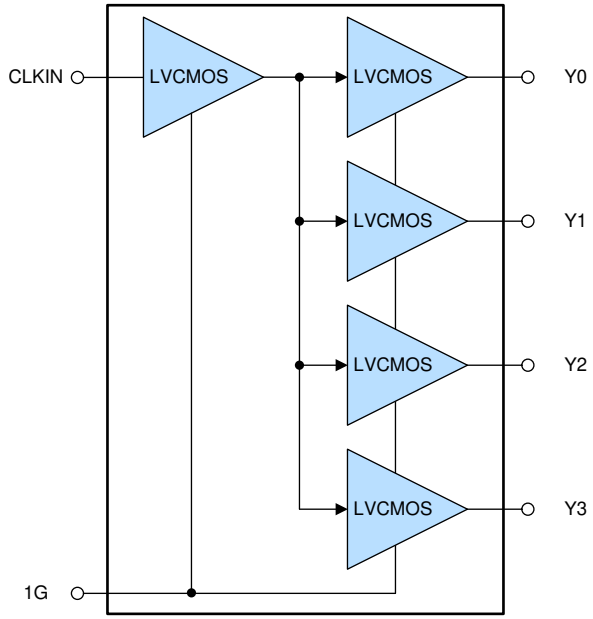

Pinout

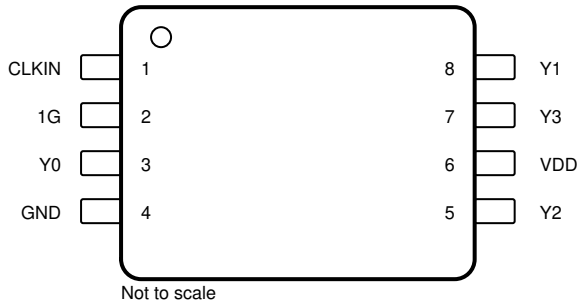

An IMPORTANT NOTICE at the end of this data sheet addresses availability, warranty, changes, use in safety-critical applications, intellectual property matters and other important disclaimers. PRODUCTION DATA.

Table of Contents

1 Features ... 1
2 Applications ... 1
3 Description ... 1
4 Revision History ... 2
5 Pin Configuration and Functions ... 3
6 Specifications ... 4
6.1 Absolute Maximum Ratings ... 4
6.2 ESD Ratings ... 4
6.3 Recommended Operating Conditions ... 4
6.4 Thermal Information ... 4
6.5 Electrical Characteristics ... 4
6.6 Timing Requirements ... 6
6.7 Typical Characteristics ... 6
7 Parameter Measurement Information ... 7
8 Detailed Description ... 9
8.1 Overview ... 9
8.2 Functional Block Diagram ... 9
8.3 Feature Description ... 9
8.4 Device Functional Modes ... 9
9 Application and Implementation ... 10
9.1 Application Information ... 10
9.2 Typical Application ... 10
10 Power Supply Recommendations ... 11
11 Layout ... 12
11.1 Layout Guidelines ... 12
11.2 Layout Example ... 12
12 Device and Documentation Support ... 13
12.1 Related Links ... 13
12.2 Receiving Notification of Documentation Updates 13
12.3 Support Resources ... 13
12.4 Trademarks ... 13
12.5 Electrostatic Discharge Caution ... 13
12.6 Glossary ... 13
13 Mechanical, Packaging, and Orderable Information ... 13

4 Revision History

Changes from Original (Decmeber 2019) to Revision A	Page
• Added the LMK1C1102 and LMK1C1103 to the data sheet	1
• Changed G1 pin description	3
• Changed VDD pin description	3
• Changed the *Power Supply Recommendations* section	11

Copyright © 2019–2020, Texas Instruments Incorporated

5 Pin Configuration and Functions

PW Package
8-Pin TSSOP
Top View

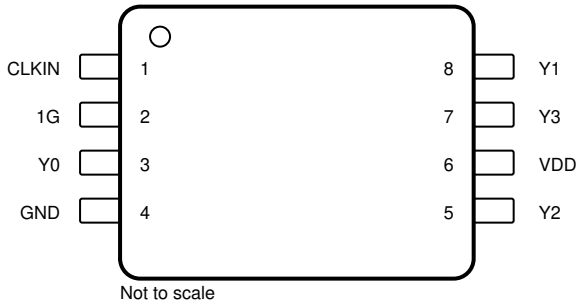

Pin Functions

PIN		TYPE	DESCRIPTION
NAME	LMK1C1104		
LVCMOS CLOCK INPUT			
CLKIN	1	Input	Single-ended clock input with internal 300-kΩ (typical) pulldown resistor to GND. Typically connected to a single-ended clock input.
CLOCK OUTPUT ENABLE			
1G	2	Input	Global Output Enable with internal 300-kΩ (typical) pulldown resistor to GND. Typically connected to VDD with external pullup resistor. HIGH: outputs enabled LOW: outputs disabled
LVCMOS CLOCK OUTPUT			
Y0	3	Output	LVCMOS output. Typically connected to a receiver. Unused outputs can be left floating.
Y1	8		
Y2	5		
Y3	7		
SUPPLY VOLTAGE			
VDD	6	Power	Power supply terminal. Typically connected to a 3.3-V, 2.5-V, or 1.8-V supply. The VDD pin is typically connected to an external 0.1-µF capacitor near the pin.
GROUND			
GND	4	GND	Power supply ground.

6 Specifications

6.1 Absolute Maximum Ratings

over operating free-air temperature range (unless otherwise noted)[1]

		MIN	MAX	UNIT
V_{DD}	Supply voltage	–0.5	3.6	V
V_{CLKIN}	Input voltage (CLKIN)			
V_{IN}	Input voltage (1G)			
V_{Yn}	Output pins (Yn)	–0.5	V_{DD} + 0.3	
I_{IN}	Input current	–20	20	mA
I_O	Continuous output current	–50	50	mA
T_{stg}	Storage temperature	–65	150	°C

(1) Stresses beyond those listed under *Absolute Maximum Rating* may cause permanent damage to the device. These are stress ratings only, which do not imply functional operation of the device at these or any other conditions beyond those indicated under *Recommended Operating Condition*. Exposure to absolute-maximum-rated conditions for extended periods may affect device reliability.

6.2 ESD Ratings

			VALUE	UNIT
$V_{(ESD)}$	Electrostatic discharge	Human body model (HBM), per ANSI/ESDA/JEDEC JS-001, all pins[1]	±6000	V
		Charged device model (CDM), per JEDEC specification JESD22-C101, all pins[2]	±1500	

(1) JEDEC document JEP155 states that 500-V HBM allows safe manufacturing with a standard ESD control process.
(2) JEDEC document JEP157 states that 250-V CDM allows safe manufacturing with a standard ESD control process.

6.3 Recommended Operating Conditions

over operating free-air temperature range (unless otherwise noted)

			MIN	NOM	MAX	UNIT
V_{DD}	Core supply voltage	3.3-V supply	3.135	3.3	3.465	V
		2.5-V supply	2.375	2.5	2.625	
		1.8-V supply	1.71	1.8	1.89	
T_A	Operating free-air temperature		–40		125	°C
T_J	Operating junction temperature		–40		150	°C

6.4 Thermal Information

THERMAL METRIC[1]		LMK1C1104 PW (TSSOP) 8 PINS	UNIT
R_{qJA}	Junction-to-ambient thermal resistance	181.9	°C/W
$R_{qJC(top)}$	Junction-to-case (top) thermal resistance	76.6	°C/W
R_{qJB}	Junction-to-board thermal resistance	111.6	°C/W
Y_{JT}	Junction-to-top characterization parameter	16	°C/W
Y_{JB}	Junction-to-board characterization parameter	110.1	°C/W

(1) For more information about traditional and new thermal metrics, see the Semiconductor and IC Package Thermal Metrics application report.

6.5 Electrical Characteristics

VDD = 3.3 V ± 5 %, –40°C ≤ TA ≤ 125°C. Typical values are at VDD = 3.3 V, 25°C (unless otherwise noted)

PARAMETER		TEST CONDITIONS	MIN	TYP	MAX	UNIT
CURRENT CONSUMPTION						
I_{DD}	Core supply current, static	All-outputs disabled, f_{IN} = 0 V		25	45	µA

Copyright © 2019–2020, Texas Instruments Incorporated

Electrical Characteristics (continued)

VDD = 3.3 V ± 5 %, –40°C ≤ TA ≤ 125°C. Typical values are at VDD = 3.3 V, 25°C (unless otherwise noted)

PARAMETER		TEST CONDITIONS	MIN	TYP	MAX	UNIT
I_{DD}	Core supply current	All-outputs disabled, f_{IN} = 100 MHz		8	15	mA
		All-outputs active, f_{IN} = 100 MHz, C_L = 5pF, V_{DD} = 1.8 V		14	20	
		All-outputs active, f_{IN} = 100 MHz, C_L = 5pF, V_{DD} = 2.5 V		21	30	
		All-outputs active, f_{IN} = 100 MHz, C_L = 5pF, V_{DD} = 3.3 V		33	40	
CLOCK INPUT						
f_{IN_SE}	Input frequency	V_{DD} = 3.3 V	DC		250	MHz
		V_{DD} = 2.5 V and 1.8 V	DC		200	
V_{IH}	Input high voltage		0.7 x V_{DD}			V
V_{IL}	Input low voltage				0.3 x V_{DD}	
dV_{IN}/dt	Input slew rate	20% - 80% of input swing	0.1			V/ns
I_{IN_LEAK}	Input leakage current		–50		50	uA
C_{IN_SE}	Input capacitance	at 25°C		7		pF
CLOCK OUTPUT FOR ALL V_{DD} LEVELS						
f_{OUT}	Output frequency	V_{DD} = 3.3 V			250	MHz
		V_{DD} = 2.5 V and 1.8 V			200	
ODC	Output duty cycle	With 50% duty cycle input	45		55	%
t_{START}	Start-up time before output is active	See (1)			3	ms
t_{1G_ON}	Output enable time	See (2)			5	cycles
t_{1G_OFF}	Output disable time	See (3)			5	cycles
CLOCK OUTPUT FOR V_{DD} = 3.3 V ± 5%						
V_{OH}	Output high voltage	I_{OH} = 1 mA	2.8			V
V_{OL}	Output low voltage	I_{OL} = 1 mA			0.2	
$t_{RISE-FALL}$	Output rise and fall time	20/80%, C_L= 5 pF, fIN = 156.25 MHz		0.35	0.7	ns
$t_{OUTPUT-SKEW}$	Output-output skew	See (4)		25	50	ps
$t_{PART-SKEW}$	Part-to-part skew				450	
$t_{PROP-DELAY}$	Propagation delay	See (5)		1.5	2	ns
$t_{JITTER-ADD}$	Additive Jitter	f_{IN} = 156.25 MHz, Input slew rate = 2 V/ns, Integration range = 12 kHz - 20 MHz		8	20	fs, RMS
R_{OUT}	Output impedance			50		Ω
CLOCK OUTPUT FOR V_{DD} = 2.5 V ± 5%						
V_{OH}	Output high voltage	I_{OH} = 1 mA	0.8 x V_{DD}			V
V_{OL}	Output low voltage	I_{OL} = 1 mA			0.2 x V_{DD}	
$t_{RISE-FALL}$	Output rise and fall time	20/80%, C_L= 5 pF, f_{IN} = 156.25 MHz		0.33	0.8	ns
$t_{OUTPUT-SKEW}$	Output-output skew	See (4)			50	ps
$t_{PART-SKEW}$	Part-to-part skew				400	
$t_{PROP-DELAY}$	Propagation delay	See (5)		1.5	2.5	ns
$t_{JITTER-ADD}$	Additive Jitter	f_{IN} = 156.25 MHz, Input slew rate = 2 V/ns, Integration range = 12 kHz - 20 MHz		11	27	fs, RMS

(1) Measured from VDD stable to output active, when 1G = HIGH.
(2) Measured from 1G rising edge crossing VIH to first rising edge of Yn.
(3) Measured from 1G falling edge crossing VIL to last falling edge of Yn.
(4) Measured from rising edge of any Yn output to any other Ym output.
(5) Measured from rising edge of CLKIN to any Yn output.

Copyright © 2019–2020, Texas Instruments Incorporated

Electrical Characteristics (continued)

VDD = 3.3 V ± 5 %, –40°C ≤ TA ≤ 125°C. Typical values are at VDD = 3.3 V, 25°C (unless otherwise noted)

PARAMETER		TEST CONDITIONS	MIN	TYP	MAX	UNIT
R_{OUT}	Output impedance			52.5		Ω
CLOCK OUTPUT FOR V_{DD} = 1.8 V ± 5%						
V_{OH}	Output high voltage	I_{OH} = 1 mA	0.8 x V_{DD}			V
V_{OL}	Output low voltage	I_{OL} = 1 mA			0.2 x V_{DD}	V
$t_{RISE-FALL}$	Output rise and fall time	20/80%, C_L= 5 pF, f_{IN} = 156.25 MHz		0.38	1	ns
$t_{OUTPUT-SKEW}$	Output-output skew	See (4)			50	ps
$t_{PART-SKEW}$	Part-to-part skew				900	ps
$t_{PROP-DELAY}$	Propagation delay	See (5)		1.5	3	ns
$t_{JITTER-ADD}$	Additive Jitter	f_{IN} = 156.25 MHz, Input slew rate = 2 V/ns, Integration range = 12 kHz - 20 MHz		17.5	50	fs, RMS
R_{OUT}	Output impedance			60		Ω
GENERAL PURPOSE INPUT (1G)						
V_{IH}	High-level input voltage		0.75 x V_{DD}			V
V_{IL}	Low-level input voltage				0.25 x V_{DD}	V
I_{IH}	Input high-level current	V_{IH} = V_{DD_REF}	–50		50	µA
I_{IL}	Input low-level current	V_{IL} = GND	–50		50	µA

6.6 Timing Requirements

VDD = 3.3 V ± 5 %, –40°C ≤ TA ≤ 125°C

		MIN	NOM	MAX	UNIT
POWER SUPPLY					
V/t_{RAMP}	V_{DD} ramp rate	0.1		50	V/ms

6.7 Typical Characteristics

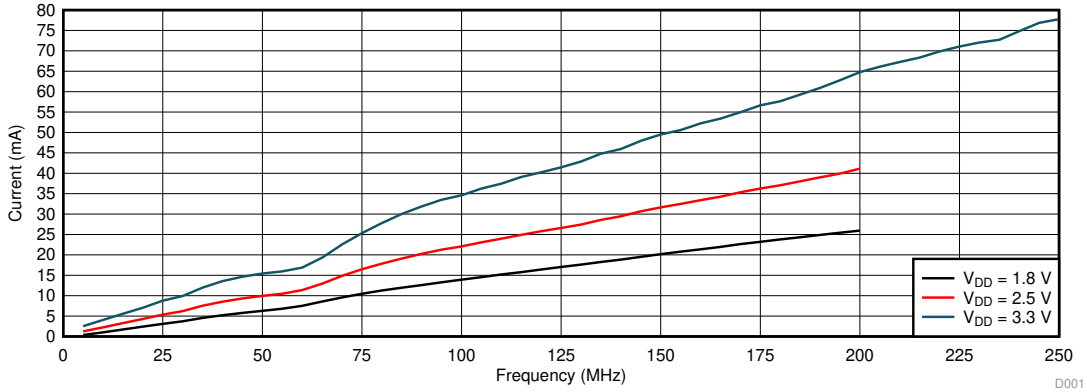

Figure 1. Device Power Consumption vs Clock Frequency (Load 5 pF)

Copyright © 2019–2020, Texas Instruments Incorporated

7 Parameter Measurement Information

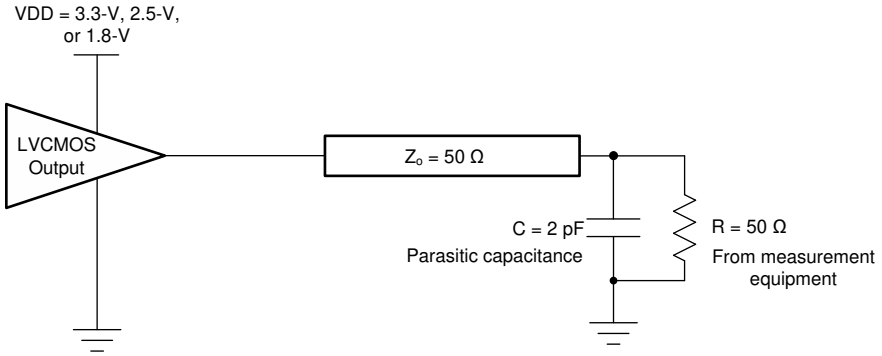

Figure 2. Test Load Circuit

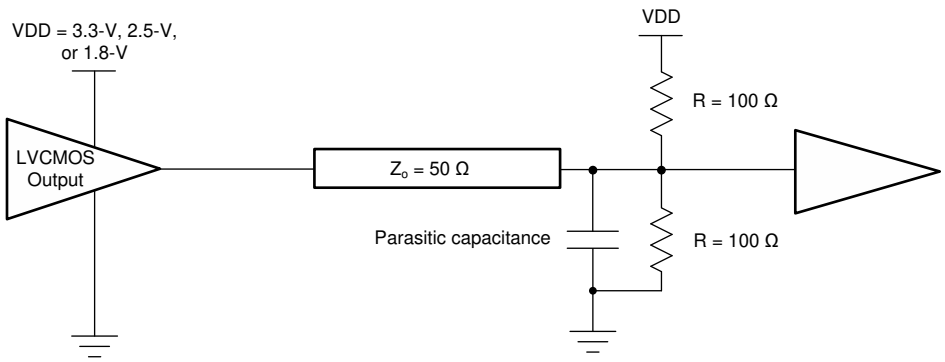

Figure 3. Application Load With 50-Ω Termination

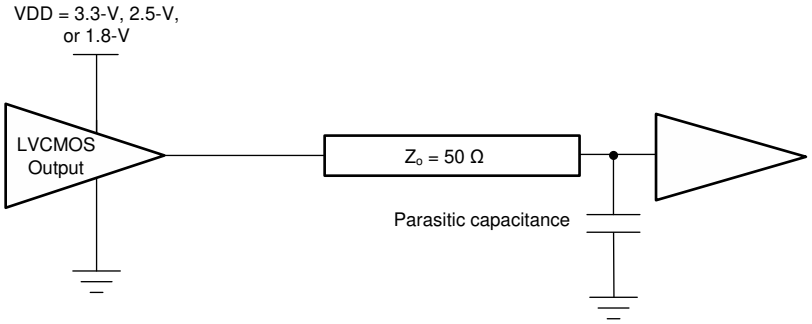

Figure 4. Application Load With Termination

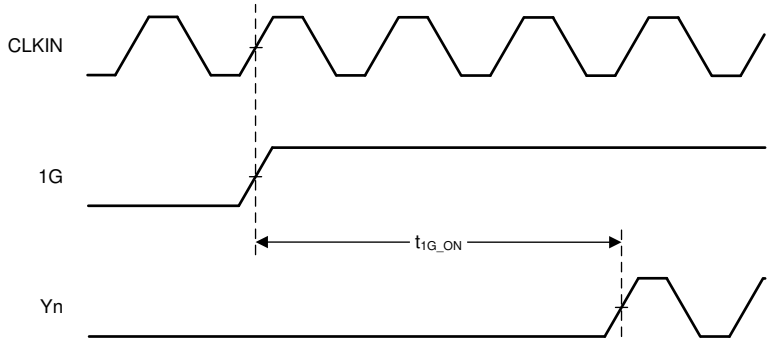

Figure 5. t_{1G_ON} Output Enable Time

Parameter Measurement Information (continued)

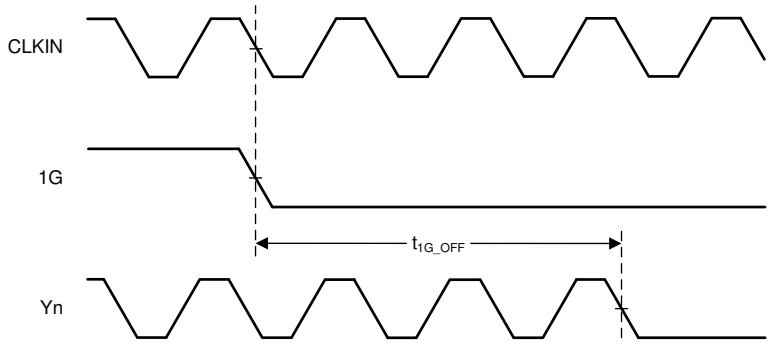

Figure 6. t_{1G_OFF} Output Disable Time

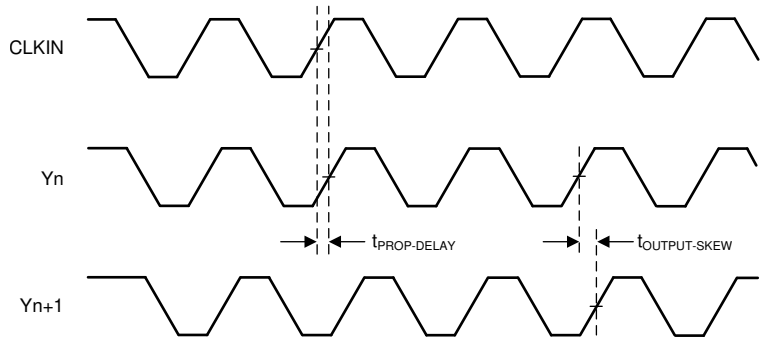

Figure 7. Propagation Delay $t_{PROP-DELAY}$ and Output Skew $t_{OUTPUT-SKEW}$

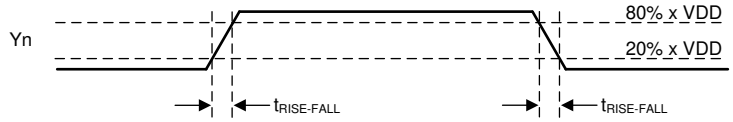

Figure 8. Rise and Fall Time $t_{RISE-FALL}$

Copyright © 2019–2020, Texas Instruments Incorporated

8 Detailed Description

8.1 Overview

The LMK1C110x family of devices is part of a low-jitter and low-skew LVCMOS fan-out buffer solution. For best signal integrity, it is important to match the characteristic impedance of the LMK1C110x's output driver with that of the transmission line.

8.2 Functional Block Diagram

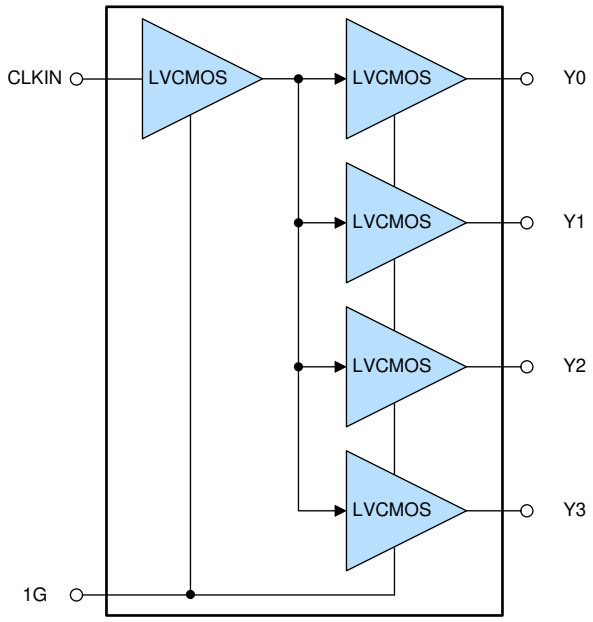

8.3 Feature Description

The outputs of the LMK1C110x can be disabled by driving the synchronous output enable pin (1G) low. Unused output can be left floating to reduce overall system component cost. Supply and ground pins must be connected to V_{DD} and GND, respectively.

8.4 Device Functional Modes

The LMK1C110x operates from 1.8-V, 2.5-V, or 3.3-V supplies. Table 1 shows the output logics of the LMK1C110x.

Table 1. Output Logic Table

INPUTS		OUTPUTS
CLKIN	1G	Yn
X	L	L
L	H	L
H	H	H

9 Application and Implementation

NOTE

Information in the following applications sections is not part of the TI component specification, and TI does not warrant its accuracy or completeness. TI's customers are responsible for determining suitability of components for their purposes. Customers should validate and test their design implementation to confirm system functionality.

9.1 Application Information

The LMK1C110x family is a low additive jitter LVCMOS buffer solution that can operate up to 250-MHz at V_{DD} = 3.3 V and 200 MHz at V_{DD} = 2.5 V to 1.8 V. Low output skew as well as the ability for synchronous output enable is featured to simultaneously enable or disable buffered clock outputs as necessary in the application.

9.2 Typical Application

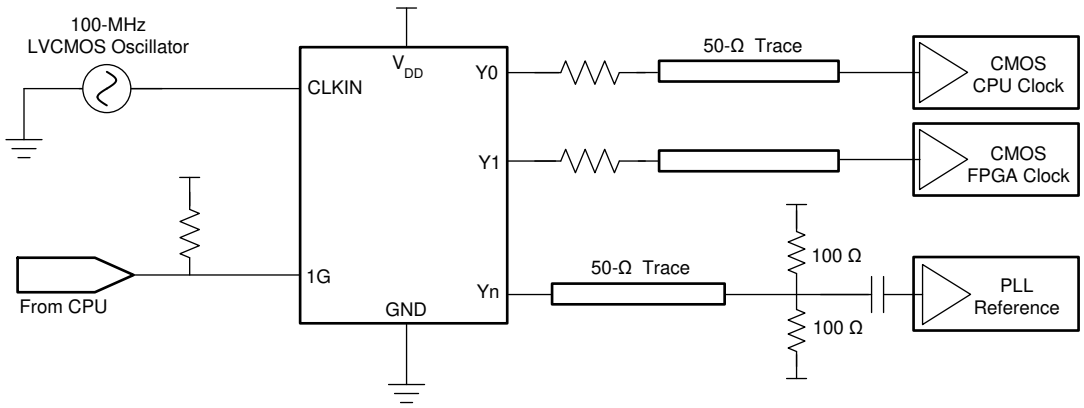

Figure 9. System Configuration Example

9.2.1 Design Requirements

The LMK1C110x shown in Figure 9 is configured to fan out a 100-MHz signal from a local LVCMOS oscillator. The CPU is configured to control the output state through 1G.

The configuration example is driving three LVCMOS receivers in a backplane application with the following properties:

- The CPU clock can accept a full swing DC-coupled LVCMOS signal. A series resistor is placed near the LMK1C110x to closely match the characteristic impedance of the trace to minimize reflections.
- The FPGA clock is similarly DC-coupled with an appropriate series resistor placed near the LMK1C110x.
- The PLL in this example can accept a lower amplitude signal, so a Thevenin's equivalent termination is used. The PLL receiver features internal biasing, so AC coupling can be used when common-mode voltage is mismatched.

9.2.2 Detailed Design Procedure

Unused outputs can be left floating. See the *Power Supply Recommendations* section for recommended filtering techniques.

9.2.3 Application Curves

The low additive jitter of the LMK1C110x is shown in Figure 10.

Figure 11 shows the low-noise 156.25-MHz reference source with 25.6-fs RMS jitter driving the LMK1C110x, resulting in 26.7-fs RMS jitter when integrated from 12 kHz to 20 MHz at 3.3-V supply. The resultant additive jitter measured is a low 7.6-fs RMS for this configuration.

Copyright © 2019–2020, Texas Instruments Incorporated

Typical Application (continued)

Figure 12 shows the low-noise 156.25-MHz reference source with 25.6-fs RMS jitter driving the LMK1C110x, resulting in 27.5-fs RMS jitter when integrated from 12 kHz to 20 MHz at 2.5-V supply. The resultant additive jitter measured is a low 10-fs RMS for this configuration.

Figure 13 shows the low-noise 156.25-MHz reference source with 25.6-fs RMS jitter driving the LMK1C110x, resulting in 32-fs RMS jitter when integrated from 12 kHz to 20 MHz at 1.8-V supply. The resultant additive jitter measured is a low 19.2-fs RMS for this configuration.

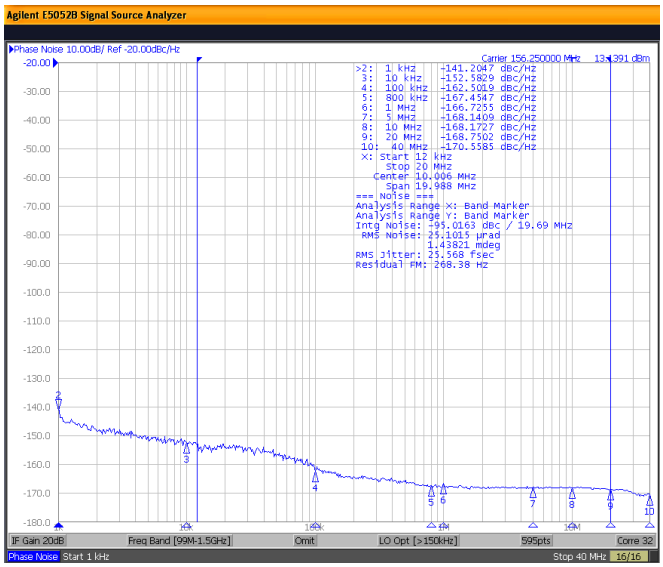

Figure 10. LMK1C110x Reference Phase Noise 25.6-fs (12 kHz to 20 MHz)

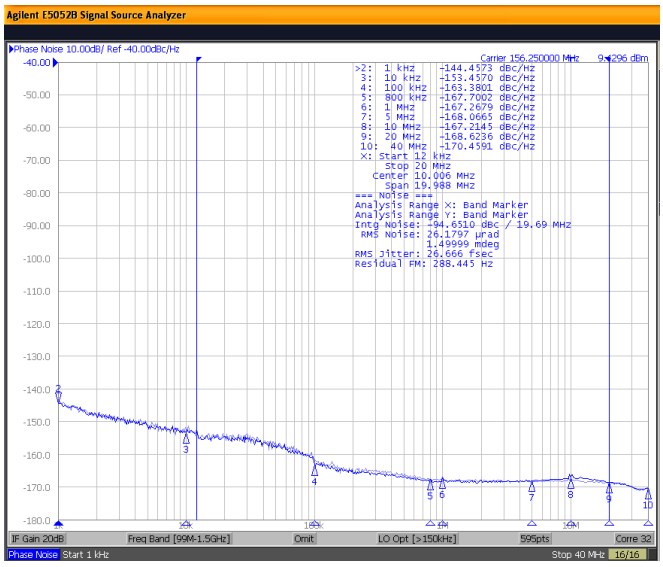

Figure 11. LMK1C110x 3.3-V Output Phase Noise 26.7-fs (12 kHz to 20 MHz)

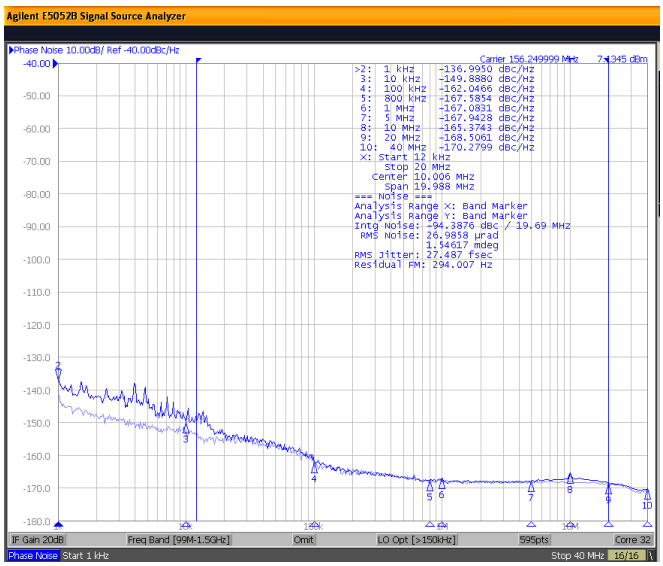

Figure 12. LMK1C110x 2.5-V Output Phase Noise 27.5-fs (12 kHz to 20 MHz)

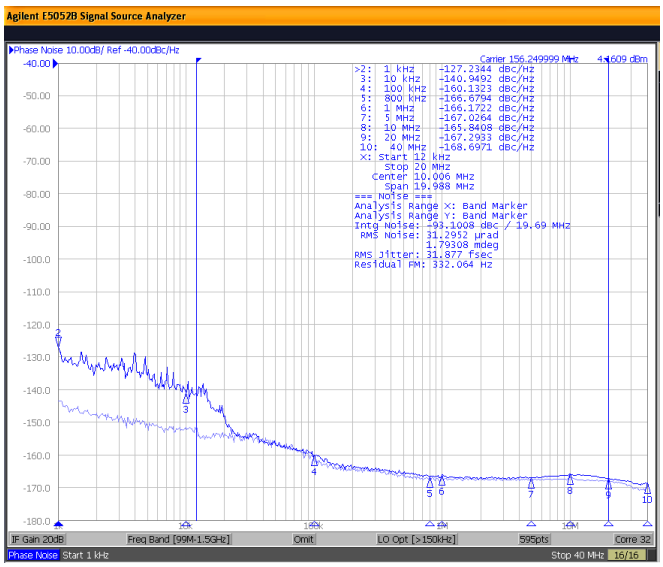

Figure 13. LMK1C110x 1.8-V Output Phase Noise 32-fs (12 kHz to 20 MHz)

10 Power Supply Recommendations

High-performance clock buffers can be sensitive to noise on the power supply, which may dramatically increase the additive jitter of the buffer. Thus, it is essential to manage any excessive noise from the system power supply, especially for applications where the jitter and phase noise performance is critical.

Filter capacitors are used to eliminate the low-frequency noise from the power supply, where the bypass capacitors provide the very low impedance path for high-frequency noise and guard the power supply system against induced fluctuations. These bypass capacitors also provide instantaneous current surges as required by the device and should have low equivalent series resistance (ESR). To properly bypass the supply, the decoupling capacitors must be placed very close to the power-supply terminals, be connected directly to the ground plane, and laid out with short loops to minimize inductance. TI recommends adding as many high-frequency (for example, 0.1 µF) bypass capacitors, as there are supply terminals in the package. TI recommends, but does not require, inserting a ferrite bead between the board power supply and the chip power supply that isolates the high-frequency switching noises generated by the clock buffer; these beads prevent the switching noise from leaking into the board supply. It is imperative to choose an appropriate ferrite bead with very low DC resistance to provide adequate isolation between the board supply and the chip supply, as well as to maintain a voltage at the supply terminals that is greater than the minimum voltage required for proper operation.

Figure 14 shows this recommended power supply decoupling method.

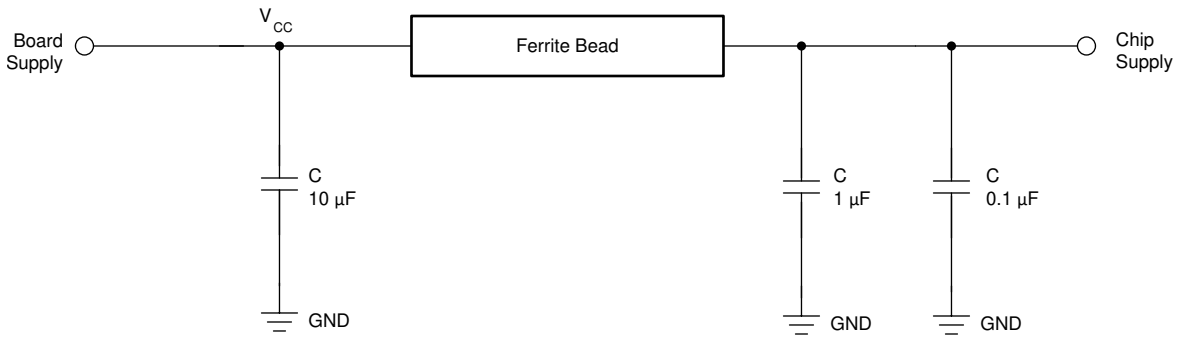

Figure 14. Power Supply Decoupling

11 Layout

11.1 Layout Guidelines

Figure 15 shows a conceptual layout detailing recommended placement of power supply bypass capacitors. For component side mounting, use 0402 body size capacitors to facilitate signal routing. Keep the connections between the bypass capacitors and the power supply on the device as short as possible. Ground the other side of the capacitor using a low-impedance connection to the ground plane.

11.2 Layout Example

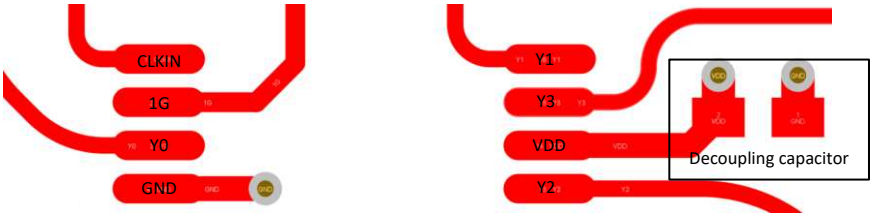

Figure 15. PCB Conceptual Layout

Copyright © 2019–2020, Texas Instruments Incorporated

12 Device and Documentation Support

12.1 Related Links

The table below lists quick access links. Categories include technical documents, support and community resources, tools and software, and quick access to order now.

Table 2. Related Links

PARTS	PRODUCT FOLDER	ORDER NOW	TECHNICAL DOCUMENTS	TOOLS & SOFTWARE	SUPPORT & COMMUNITY
LMK1C1102	Click here	Click here	Click here	Click here	Click here
LMK1C1103	Click here	Click here	Click here	Click here	Click here
LMK1C1104	Click here	Click here	Click here	Click here	Click here

12.2 Receiving Notification of Documentation Updates

To receive notification of documentation updates, navigate to the device product folder on ti.com. In the upper right corner, click on *Alert me* to register and receive a weekly digest of any product information that has changed. For change details, review the revision history included in any revised document.

12.3 Support Resources

TI E2E™ support forums are an engineer's go-to source for fast, verified answers and design help — straight from the experts. Search existing answers or ask your own question to get the quick design help you need.

Linked content is provided "AS IS" by the respective contributors. They do not constitute TI specifications and do not necessarily reflect TI's views; see TI's Terms of Use.

12.4 Trademarks

E2E is a trademark of Texas Instruments.
All other trademarks are the property of their respective owners.

12.5 Electrostatic Discharge Caution

These devices have limited built-in ESD protection. The leads should be shorted together or the device placed in conductive foam during storage or handling to prevent electrostatic damage to the MOS gates.

12.6 Glossary

SLYZ022 — *TI Glossary*.

This glossary lists and explains terms, acronyms, and definitions.

13 Mechanical, Packaging, and Orderable Information

The following pages include mechanical, packaging, and orderable information. This information is the most current data available for the designated devices. This data is subject to change without notice and revision of this document. For browser-based versions of this data sheet, refer to the left-hand navigation.

PACKAGING INFORMATION

Orderable Device	Status (1)	Package Type	Package Drawing	Pins	Package Qty	Eco Plan (2)	Lead/Ball Finish (6)	MSL Peak Temp (3)	Op Temp (°C)	Device Marking (4/5)	Samples
LMK1C1102PWR	ACTIVE	TSSOP	PW	8	2000	Green (RoHS & no Sb/Br)	NIPDAU	Level-1-260C-UNLIM	-40 to 125	LMK1C2	Samples
LMK1C1103PWR	ACTIVE	TSSOP	PW	8	2000	Green (RoHS & no Sb/Br)	NIPDAU	Level-1-260C-UNLIM	-40 to 125	LMK1C3	Samples
LMK1C1104PWR	ACTIVE	TSSOP	PW	8	2000	Green (RoHS & no Sb/Br)	NIPDAU	Level-1-260C-UNLIM	-40 to 125	LMK1C4	Samples

(1) The marketing status values are defined as follows:
ACTIVE: Product device recommended for new designs.
LIFEBUY: TI has announced that the device will be discontinued, and a lifetime-buy period is in effect.
NRND: Not recommended for new designs. Device is in production to support existing customers, but TI does not recommend using this part in a new design.
PREVIEW: Device has been announced but is not in production. Samples may or may not be available.
OBSOLETE: TI has discontinued the production of the device.

(2) **RoHS:** TI defines "RoHS" to mean semiconductor products that are compliant with the current EU RoHS requirements for all 10 RoHS substances, including the requirement that RoHS substance do not exceed 0.1% by weight in homogeneous materials. Where designed to be soldered at high temperatures, "RoHS" products are suitable for use in specified lead-free processes. TI may reference these types of products as "Pb-Free".
RoHS Exempt: TI defines "RoHS Exempt" to mean products that contain lead but are compliant with EU RoHS pursuant to a specific EU RoHS exemption.
Green: TI defines "Green" to mean the content of Chlorine (Cl) and Bromine (Br) based flame retardants meet JS709B low halogen requirements of <=1000ppm threshold. Antimony trioxide based flame retardants must also meet the <=1000ppm threshold requirement.

(3) MSL, Peak Temp. - The Moisture Sensitivity Level rating according to the JEDEC industry standard classifications, and peak solder temperature.

(4) There may be additional marking, which relates to the logo, the lot trace code information, or the environmental category on the device.

(5) Multiple Device Markings will be inside parentheses. Only one Device Marking contained in parentheses and separated by a "~" will appear on a device. If a line is indented then it is a continuation of the previous line and the two combined represent the entire Device Marking for that device.

(6) Lead/Ball Finish - Orderable Devices may have multiple material finish options. Finish options are separated by a vertical ruled line. Lead/Ball Finish values may wrap to two lines if the finish value exceeds the maximum column width.

Important Information and Disclaimer: The information provided on this page represents TI's knowledge and belief as of the date that it is provided. TI bases its knowledge and belief on information provided by third parties, and makes no representation or warranty as to the accuracy of such information. Efforts are underway to better integrate information from third parties. TI has taken and continues to take reasonable steps to provide representative and accurate information but may not have conducted destructive testing or chemical analysis on incoming materials and chemicals. TI and TI suppliers consider certain information to be proprietary, and thus CAS numbers and other limited information may not be available for release.

In no event shall TI's liability arising out of such information exceed the total purchase price of the TI part(s) at issue in this document sold by TI to Customer on an annual basis.

TAPE AND REEL INFORMATION

REEL DIMENSIONS

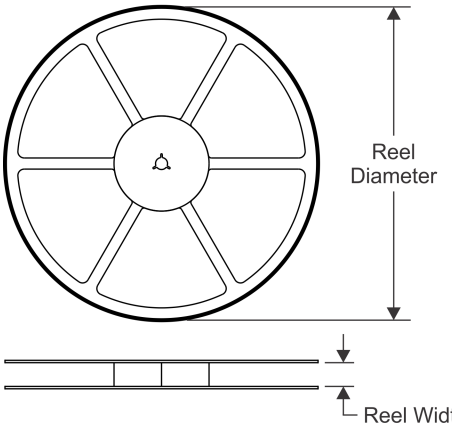

TAPE DIMENSIONS

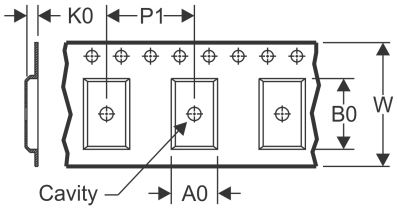

A0	Dimension designed to accommodate the component width
B0	Dimension designed to accommodate the component length
K0	Dimension designed to accommodate the component thickness
W	Overall width of the carrier tape
P1	Pitch between successive cavity centers

QUADRANT ASSIGNMENTS FOR PIN 1 ORIENTATION IN TAPE

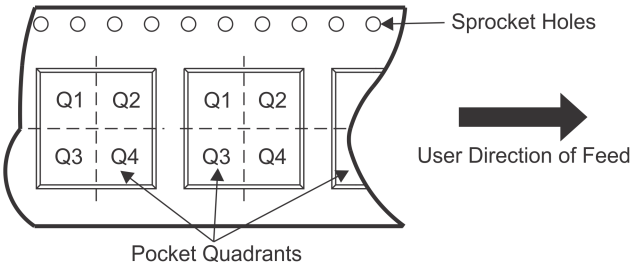

*All dimensions are nominal

Device	Package Type	Package Drawing	Pins	SPQ	Reel Diameter (mm)	Reel Width W1 (mm)	A0 (mm)	B0 (mm)	K0 (mm)	P1 (mm)	W (mm)	Pin1 Quadrant
LMK1C1104PWR	TSSOP	PW	8	2000	330.0	12.4	7.0	3.6	1.6	8.0	12.0	Q1

TAPE AND REEL BOX DIMENSIONS

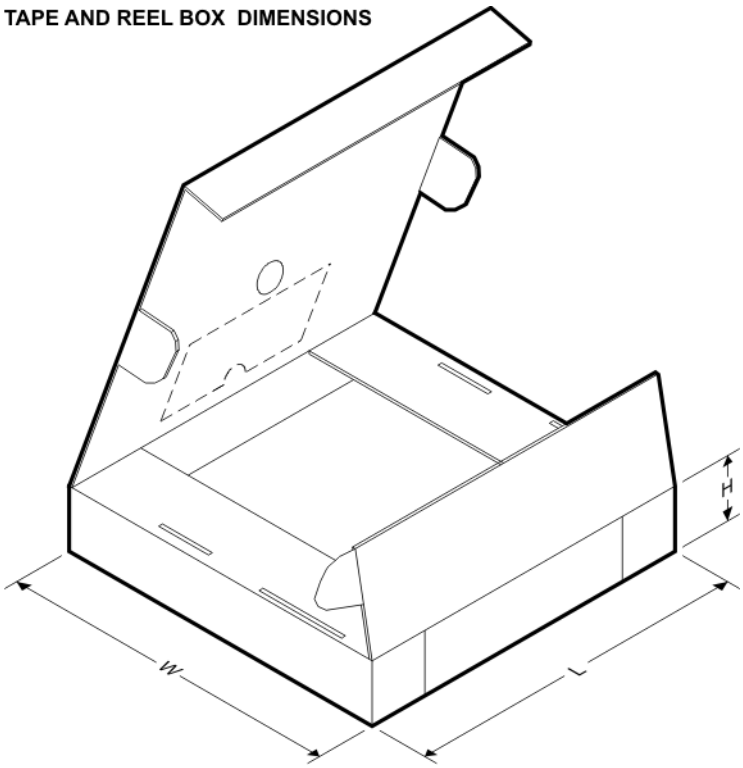

*All dimensions are nominal

Device	Package Type	Package Drawing	Pins	SPQ	Length (mm)	Width (mm)	Height (mm)
LMK1C1104PWR	TSSOP	PW	8	2000	367.0	367.0	35.0

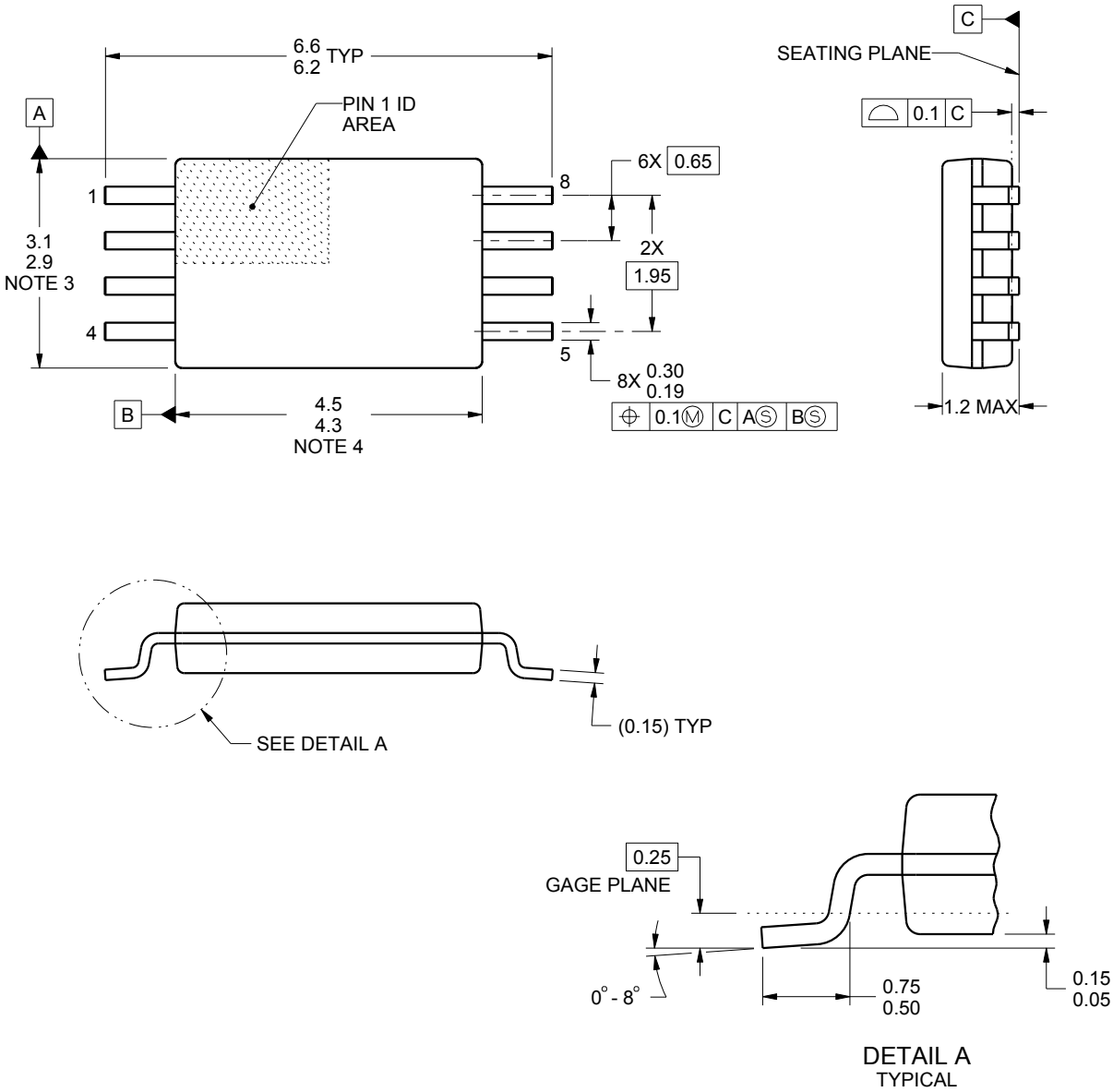

NOTES:

1. All linear dimensions are in millimeters. Any dimensions in parenthesis are for reference only. Dimensioning and tolerancing per ASME Y14.5M.
2. This drawing is subject to change without notice.
3. This dimension does not include mold flash, protrusions, or gate burrs. Mold flash, protrusions, or gate burrs shall not exceed 0.15 mm per side.
4. This dimension does not include interlead flash. Interlead flash shall not exceed 0.25 mm per side.
5. Reference JEDEC registration MO-153, variation AA.

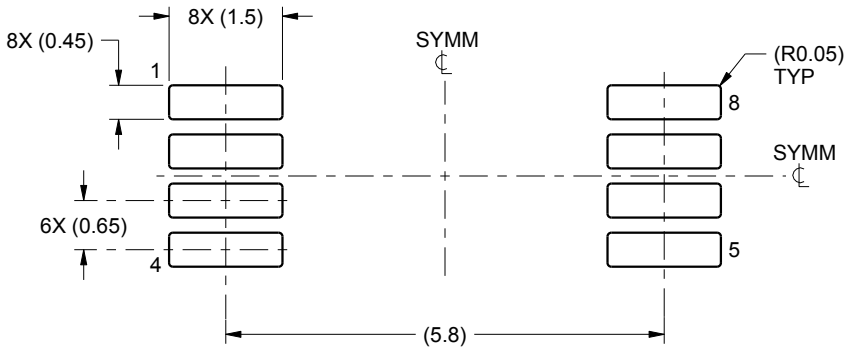

LAND PATTERN EXAMPLE
SCALE:10X

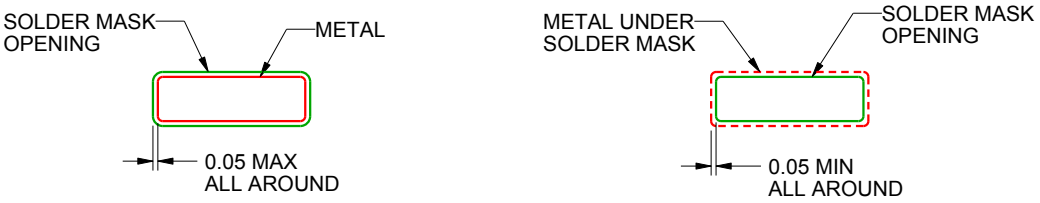

NON SOLDER MASK
DEFINED

SOLDER MASK
DEFINED

SOLDER MASK DETAILS
NOT TO SCALE

4221848/A 02/2015

NOTES: (continued)

6. Publication IPC-7351 may have alternate designs.
7. Solder mask tolerances between and around signal pads can vary based on board fabrication site.

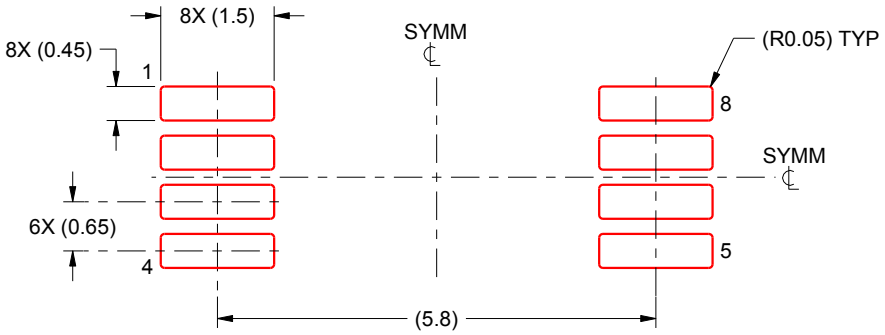

SOLDER PASTE EXAMPLE
BASED ON 0.125 mm THICK STENCIL
SCALE:10X

4221848/A 02/2015

NOTES: (continued)

8. Laser cutting apertures with trapezoidal walls and rounded corners may offer better paste release. IPC-7525 may have alternate design recommendations.
9. Board assembly site may have different recommendations for stencil design.

IMPORTANT NOTICE AND DISCLAIMER

TI PROVIDES TECHNICAL AND RELIABILITY DATA (INCLUDING DATASHEETS), DESIGN RESOURCES (INCLUDING REFERENCE DESIGNS), APPLICATION OR OTHER DESIGN ADVICE, WEB TOOLS, SAFETY INFORMATION, AND OTHER RESOURCES “AS IS” AND WITH ALL FAULTS, AND DISCLAIMS ALL WARRANTIES, EXPRESS AND IMPLIED, INCLUDING WITHOUT LIMITATION ANY IMPLIED WARRANTIES OF MERCHANTABILITY, FITNESS FOR A PARTICULAR PURPOSE OR NON-INFRINGEMENT OF THIRD PARTY INTELLECTUAL PROPERTY RIGHTS.

These resources are intended for skilled developers designing with TI products. You are solely responsible for (1) selecting the appropriate TI products for your application, (2) designing, validating and testing your application, and (3) ensuring your application meets applicable standards, and any other safety, security, or other requirements. These resources are subject to change without notice. TI grants you permission to use these resources only for development of an application that uses the TI products described in the resource. Other reproduction and display of these resources is prohibited. No license is granted to any other TI intellectual property right or to any third party intellectual property right. TI disclaims responsibility for, and you will fully indemnify TI and its representatives against, any claims, damages, costs, losses, and liabilities arising out of your use of these resources.

TI’s products are provided subject to TI’s Terms of Sale (www.ti.com/legal/termsofsale.html) or other applicable terms available either on ti.com or provided in conjunction with such TI products. TI’s provision of these resources does not expand or otherwise alter TI’s applicable warranties or warranty disclaimers for TI products.

Mailing Address: Texas Instruments, Post Office Box 655303, Dallas, Texas 75265
Copyright © 2020, Texas Instruments Incorporated