STPS20H100CT/CF/CG/CG-1

HIGH VOLTAGE POWER SCHOTTKY RECTIFIER

MAIN PRODUCT CHARACTERISTICS

$I_{F(AV)}$	2 x 10 A
V_{RRM}	100 V
Tj	175°C
V_F (max)	0.64 V

FEATURES AND BENEFITS

- NEGLIGIBLE SWITCHING LOSSES
- HIGH JUNCTION TEMPERATURE CAPABILITY
- GOOD TRADE OFF BETWEEN LEAKAGE CURRENT AND FORWARD VOLTAGE DROP
- LOW LEAKAGE CURRENT
- AVALANCHE RATED
- INSULATED PACKAGE: ISOWATT220AB
  Insulating Voltage = 2000V DC
  Capacitance = 45 pF

DESCRIPTION

Dual center tap schottky rectifier designed for high frequency miniature Switched Mode Power Supplies such as adaptators and on board DC/DC converters.

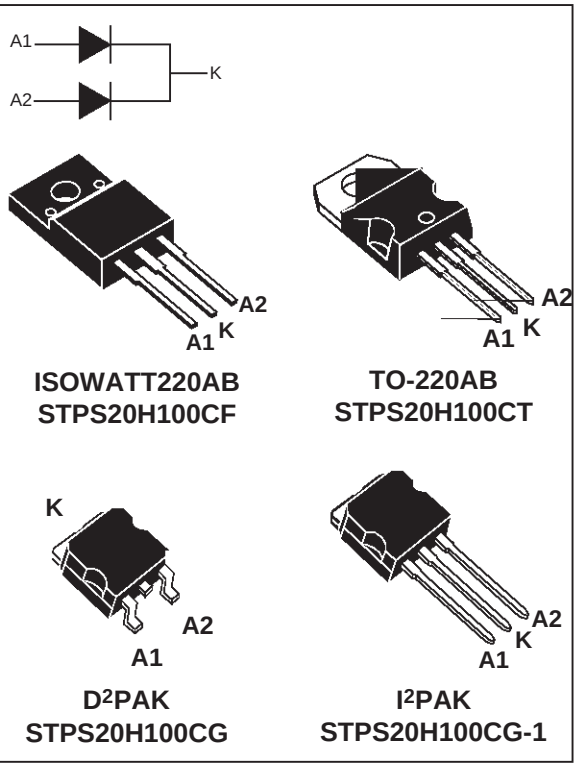

ABSOLUTE RATINGS (limiting values, per diode)

Symbol	Parameter				Value	Unit
V_{RRM}	Repetitive peak reverse voltage				100	V
$I_{F(RMS)}$	RMS forward current				30	A
$I_{F(AV)}$	Average forward current $\delta = 0.5$	TO-220AB D^2PAK / I^2PAK	Tc = 160°C	per diode per device	10 20	A
		ISOWATT220AB	Tc = 145°C			
I_{FSM}	Surge non repetitive forward current		tp = 10 ms sinusoidal		250	A
I_{RRM}	Repetitive peak reverse current		tp = 2 µs square F = 1kHz		1	A
I_{RSM}	Non repetitive peak reverse current		tp = 100 µs square		3	A
T_{stg}	Storage temperature range				- 65 to + 175	°C
Tj	Maximum operating junction temperature *				175	°C
dV/dt	Critical rate of rise of reverse voltage				10000	V/µs

* : $\frac{dPtot}{dTj} < \frac{1}{Rth(j-a)}$ thermal runaway condition for a diode on its own heatsink

THERMAL RESISTANCES

Symbol	Parameter			Value	Unit
$R_{th\ (j-c)}$	Junction to case	TO-220AB / D^2PAK / I^2PAK	Per diode	1.6	°C/W
		ISOWATT220AB	Per diode	4	
		TO-220AB / D^2PAK / I^2PAK	Total	0.9	
		ISOWATT220AB	Total	3.2	°C/W
$R_{th\ (c)}$		TO-220AB / D^2PAK / I^2PAK	Coupling	0.15	
		ISOWATT220AB	Coupling	2.5	

When the diodes 1 and 2 are used simultaneously :
Δ Tj(diode 1) = P(diode1) x $R_{th(j-c)}$(Per diode) + P(diode 2) x $R_{th(c)}$

STATIC ELECTRICAL CHARACTERISTICS (per diode)

Symbol	Parameter	Tests conditions		Min.	Typ.	Max.	Unit
I_R *	Reverse leakage current	Tj = 25°C	$V_R = V_{RRM}$			4.5	µA
		Tj = 125°C			2	6	mA
V_F **	Forward voltage drop	Tj = 25°C	I_F = 8 A			0.71	V
		Tj = 25°C	I_F = 10 A			0.77	
		Tj = 25°C	I_F = 16 A			0.81	
		Tj = 25°C	I_F = 20 A			0.88	
		Tj = 125°C	I_F = 8 A		0.56	0.58	
		Tj = 125°C	I_F = 10 A		0.59	0.64	
		Tj = 125°C	I_F = 16 A		0.65	0.68	
		Tj = 125°C	I_F = 20 A		0.67	0.73	

Pulse test : * tp = 5 ms, δ < 2%
** tp = 380 µs, δ < 2%

To evaluate the maximum conduction losses use the following equation :
P = 0.55 x $I_{F(AV)}$ + 0.009 x $I_F^2{}_{(RMS)}$

Fig. 1: Average forward power dissipation versus average forward current (per diode).

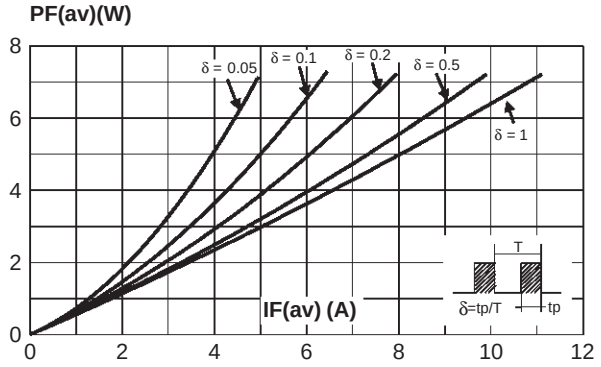

Fig. 2: Average forward current versus ambient temperature (δ=0.5, per diode).

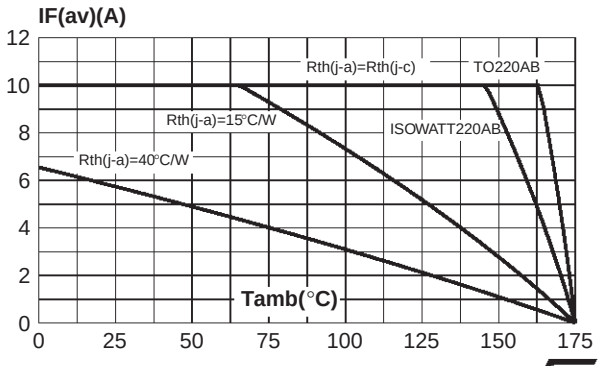

Fig. 3: Non repetitive surge peak forward current versus overload duration (maximum values, per diode) (TO-220AB, D^2PAK, I^2PAK)

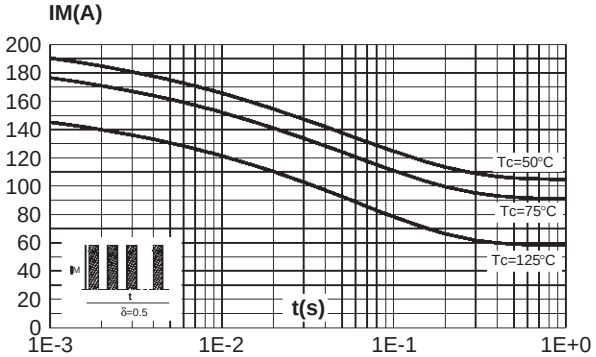

Fig. 4: Non repetitive surge peak forward current versus overload duration (maximum values, per diode) (ISOWATT220AB).

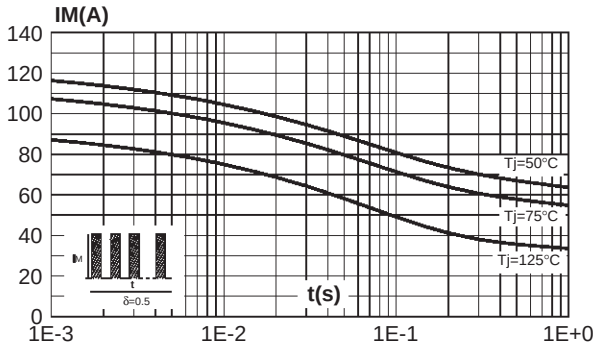

Fig. 5: Relative variation of thermal impedance junction to case versus pulse duration (per diode) (TO-220AB, D^2PAK, I^2PAK).

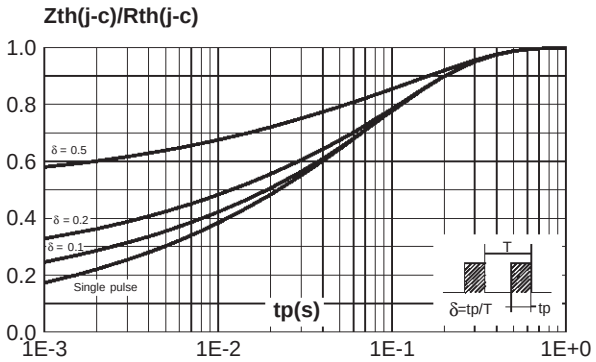

Fig. 6: Relative variation of thermal impedance junction to case versus pulse duration (per diode) (ISOWATT220AB).

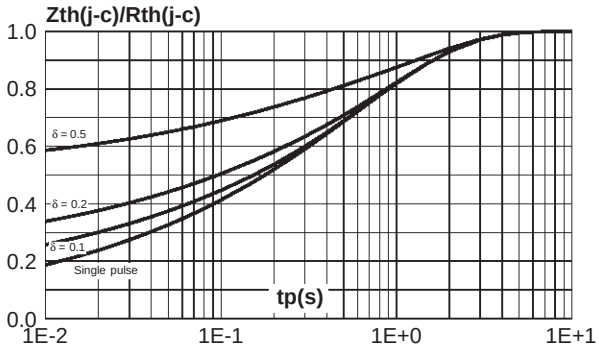

Fig. 7: Reverse leakage current versus reverse voltage applied (typical values, per diode).

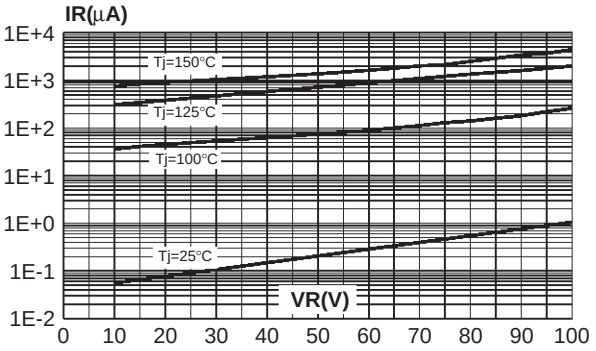

Fig. 8: Junction capacitance versus reverse voltage applied (typical values, per diode).

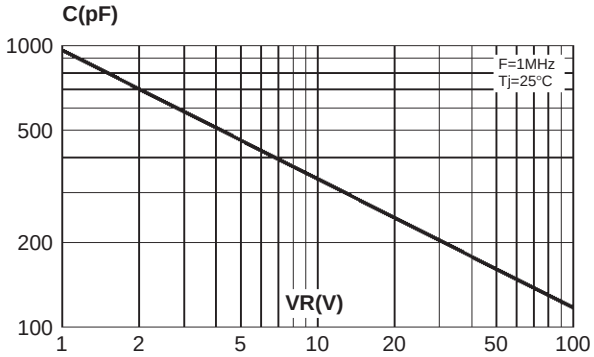

Fig. 9: Forward voltage drop versus forward current (maximum values, per diode).

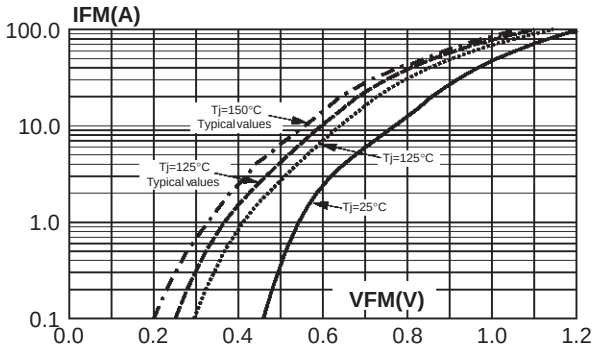

Fig. 10: Thermal resistance junction to ambient versus copper surface under tab (Epoxy printed circuit board FR4, copper thickness: 35µm) (D^2PAK).

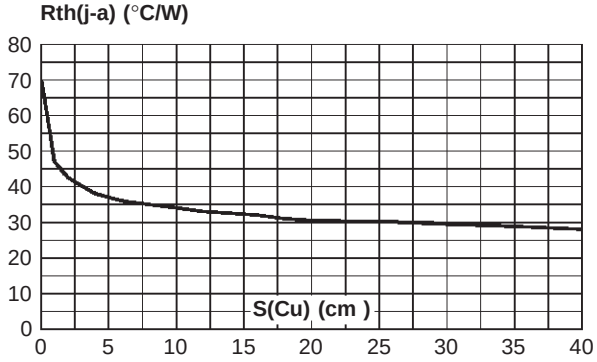

PACKAGE MECHANICAL DATA

TO-220AB

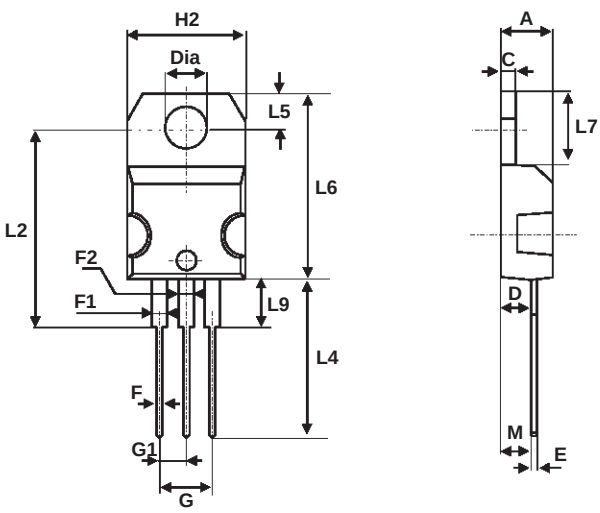

REF.	DIMENSIONS			
	Millimeters		Inches	
	Min.	Max.	Min.	Max.
A	4.40	4.60	0.173	0.181
C	1.23	1.32	0.048	0.051
D	2.40	2.72	0.094	0.107
E	0.49	0.70	0.019	0.027
F	0.61	0.88	0.024	0.034
F1	1.14	1.70	0.044	0.066
F2	1.14	1.70	0.044	0.066
G	4.95	5.15	0.194	0.202
G1	2.40	2.70	0.094	0.106
H2	10	10.40	0.393	0.409
L2	16.4 typ.		0.645 typ.	
L4	13	14	0.511	0.551
L5	2.65	2.95	0.104	0.116
L6	15.25	15.75	0.600	0.620
L7	6.20	6.60	0.244	0.259
L9	3.50	3.93	0.137	0.154
M	2.6 typ.		0.102 typ.	
Diam.	3.75	3.85	0.147	0.151

PACKAGE MECHANICAL DATA
ISOWATT220AB

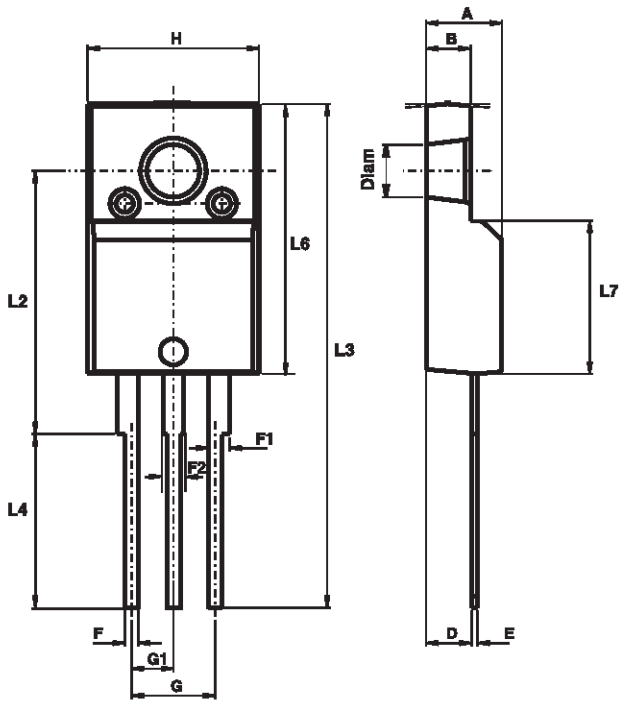

REF.	DIMENSIONS			
	Millimeters		Inches	
	Min.	Max.	Min.	Max.
A	4.40	4.60	0.173	0.181
B	2.50	2.70	0.098	0.106
D	2.50	2.75	0.098	0.108
E	0.40	0.70	0.016	0.028
F	0.75	1.00	0.030	0.039
F1	1.15	1.70	0.045	0.067
F2	1.15	1.70	0.045	0.067
G	4.95	5.20	0.195	0.205
G1	2.40	2.70	0.094	0.106
H	10.00	10.40	0.394	0.409
L2	16.00 typ.		0.630 typ.	
L3	28.60	30.60	1.125	1.205
L4	9.80	10.60	0.386	0.417
L6	15.90	16.40	0.626	0.646
L7	9.00	9.30	0.354	0.366
Diam	3.00	3.20	0.118	0.126

PACKAGE MECHANICAL DATA

D^2PAK

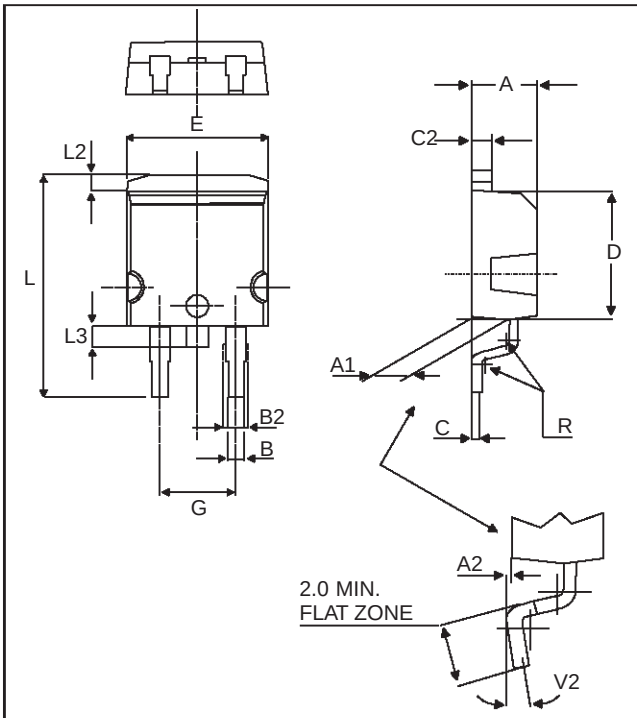

REF.	DIMENSIONS					
	Millimeters			Inches		
	Min.	Typ.	Max.	Min.	Typ.	Max.
A	4.30		4.60	0.169		0.181
A1	2.49		2.69	0.098		0.106
A2	0.03		0.23	0.001		0.009
B	0.70		0.93	0.027		0.037
B2	1.25	1.40		0.049	0.055	
C	0.45		0.60	0.017		0.024
C2	1.21		1.36	0.047		0.054
D	8.95		9.35	0.352		0.368
E	10.00		10.28	0.393		0.405
G	4.88		5.28	0.192		0.208
L	15.00		15.85	0.590		0.624
L2	1.27		1.40	0.050		0.055
L3	1.40		1.75	0.055		0.069
R		0.40			0.016	
V2	0°		8°	0°		8°

FOOT PRINT DIMENSIONS (in millimeters)

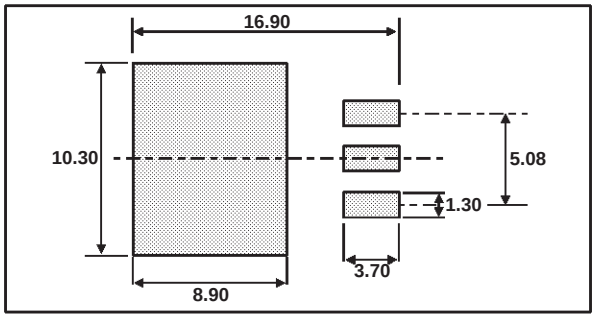

PACKAGE MECHANICAL DATA
I^2PAK

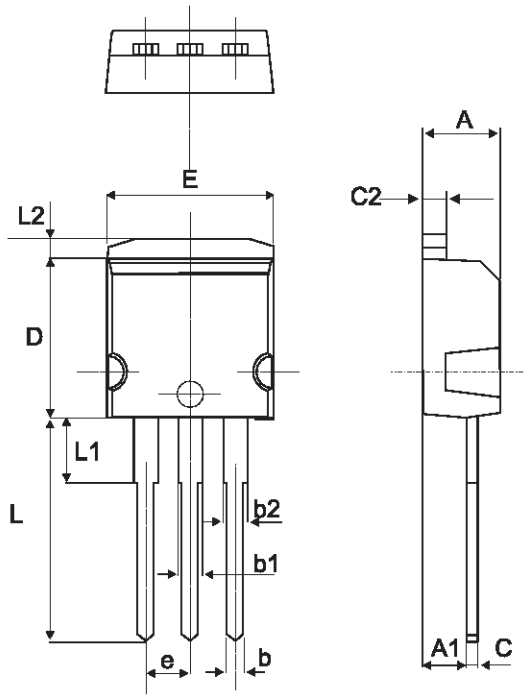

REF.	DIMENSIONS					
	Millimeters			Inches		
	Min.	Typ.	Max.	Min.	Typ.	Max.
A	4.30		4.60	0.169		0.181
A1	2.49		2.69	0.098		0.106
b	0.70		0.93	0.028		0.037
b1	1.20		1.38	0.047		0.054
b2	1.25	1.40		0.049	0.055	
C	0.45		0.60	0.018		0.024
C2	1.21		1.36	0.048		0.054
D	8.95		9.35	0.352		0.368
e	2.44		2.64	0.096		0.104
E	10.00		10.28	0.394		0.405
L	13.10		13.60	0.516		0.535
L1	3.48		3.78	0.137		0.149
L2	1.27		1.40	0.050		0.055

Ordering type	Marking	Package	Weight	Base qty	Delivery mode
STPS20H100CT	STPS20H100CT	TO-220AB	2.20g	50	Tube
STPS20H100CF	STPS20H100CF	ISOWATT220AB	2.08g	50	Tube
STPS20H100CG-1	STPS20H100CG	I^2PAK	1.49g	50	Tube
STPS20H100CG	STPS20H100CG	D^2PAK	1.48g	50	Tube
STPS20H100CG-TR	STPS20H100CG	D^2PAK	1.48g	1000	Tape & reel

- Epoxy meets UL94,V0

Information furnished is believed to be accurate and reliable. However, STMicroelectronics assumes no responsibility for the consequences of use of such information nor for any infringement of patents or other rights of third parties which may result from its use. No license is granted by implication or otherwise under any patent or patent rights of STMicroelectronics. Specifications mentioned in this publication are subject to change without notice. This publication supersedes and replaces all information previously supplied.
STMicroelectronics products are not authorized for use as critical components in life support devices or systems without express written approval of STMicroelectronics.

The ST logo is a registered trademark of STMicroelectronics

© 2000 STMicroelectronics - Printed in Italy - All rights reserved.

STMicroelectronics GROUP OF COMPANIES
Australia - Brazil - China - Finland - France - Germany - Hong Kong - India - Italy - Japan - Malaysia
Malta - Morocco - Singapore - Spain - Sweden - Switzerland - United Kingdom - U.S.A.

http://www.st.com