Rev	AWO #	Description	Date	Appr
-		RELEASED	01/17/13	
A		ADDED PIN SPEC.	3/27/15	AY/TW

APPROVED: _____

DATE: _____ TITLE: _____

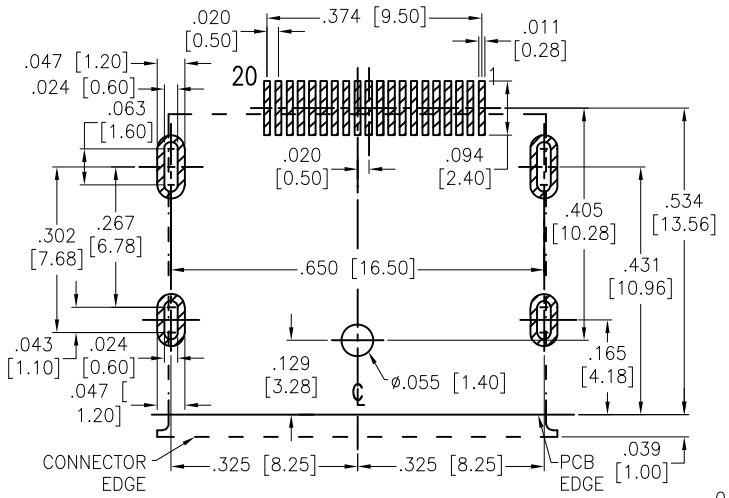

RECOMMENDED PCB LAYOUT

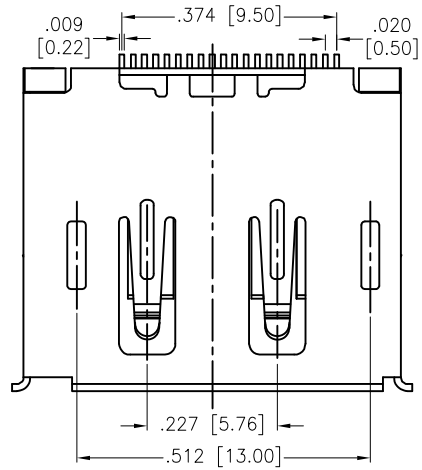

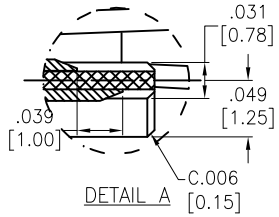

DETAIL A

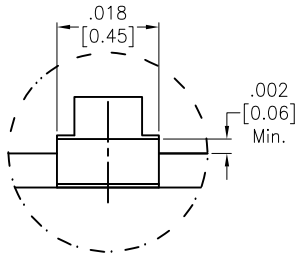

DETAIL B

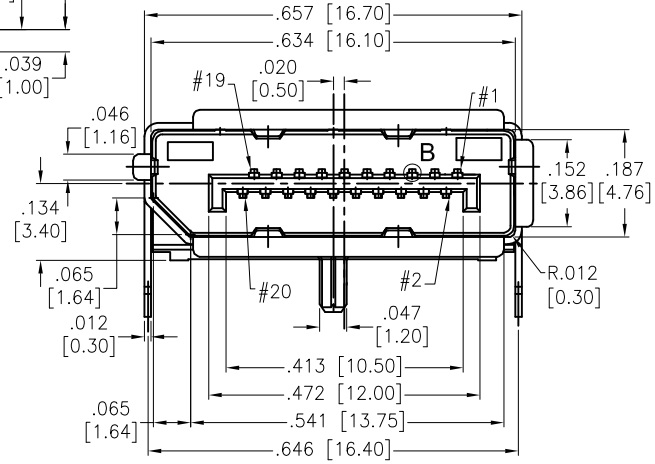

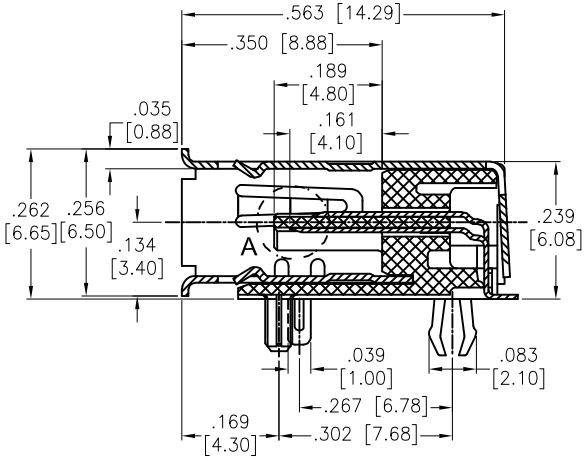

Pin No.	Signal Type	Pin No.	Signal Type
1	In	11	GND
2	GND	12	In
3	In	13	CONFIG
4	In	14	CONFIG
5	GND	15	I/O
6	In	16	GND
7	In	17	I/O
8	GND	18	Out
9	In	19	RTN
10	In	20	Power Out

SPECIFICATIONS:
Material:
Insulator: Hi-temp thermoplastic, rated UL 94V-0
Insulator color: Black
Contact: Brass
Shell: Brass, Nickel plated
Plating:
Gold Flash over Nickel on Contact area.
Tin plating on Solder Tail
Electrical:
Operating voltage: 40 VAC
Current rating: 0.5 Amps min
Contact Resistance: 30 ohms max.
Insulation Resistance: 100M ohms min.
Withstanding Voltage: 500V AC for 1 minute
Temperature Rating:
Operating temperature: -25°C to +85°C
Environmetal:
Lead free, RoHS compliant.

RoHS COMPLIANT

UNLESS OTHERWISE SPECIFIED
ALL DIMENSIONS ARE INCHES [MM]
TOLERANCES: EXCEPT AS NOTED

INCHES		HOLES	
.X	± .10	Ø.X	±.10
.XX	± .020	Ø.XX	±.015
.XXX	± .015	Ø.XXX	±.010

APPROVALS		DATE
DRAWN	TW	01/17/13
CHECKED	YC	01/17/13
APPROVED		

ADAM TECH
909 Rahway Avenue, Union, NJ 07083
Phone: 908-687-5000 Fax: 908-687-5710

TITLE
DISPLAYPORT RECEPTACLE, R/A, SMT TYPE
20 PINS, W/ PEG, W/ BOARDLOCK

SIZE	PART NO.	REV.
X	DPC-F-S-RA-SMT-P-BL	A

REF: S00078T | SCALE: NTS | SHEET 1 OF 1