Single Channel SSRs

Dual Channel SSRs

crydom®

SeriesOne DR

THE GLOBAL EXPERT
IN SOLID STATE RELAY
TECHNOLOGY

crydom®

ABOUT US

Crydom, a company of Custom Sensors & Technologies (CST) and **global expert in Solid State Relay Technology**, has a distinguished record of providing high quality, world class Solid State Relay and Control Products for a variety of heating, lighting and motion control applications. Crydom products, coupled with **unparalleled technical support, timely delivery and competitive pricing**, provide Crydom's clients with the innovative products and support necessary to succeed in today's competitive and fast paced global markets.

Crydom's extensive selection of standard off-the-shelf products is constantly being updated and expanded through its continuous improvement and aggressive new product development programs. Utilizing state of the art designs, materials and technology, Crydom offers a wide range of AC and DC output SSRs in industry standard Panel Mount, PCB Mount and DIN Rail packages, all **meeting global safety and standards agency requirements** such as CE, RoHS, UL, IEC, etc.

Bolstered by four decades of Solid State Relay operations experience, Crydom also specializes and encourages **adapted and fully custom-designed SSR products** for nearly any application where unique specifications and optimized performance are critical for success.

Crydom's modern purpose-built **100,000 square foot manufacturing facility** houses all aspects of its ISO certified operation including Design and Development Engineering, Manufacturing Operations and Quality Assurance, Customer Service, Finance, Marketing and General Management, permitting close coordination of all aspects of Crydom's activities. Applications Engineering and Sales support are both performed in the field to provide Crydom's Customers with the unparalleled technical and commercial support.

Following rigid design guidelines and standards, Crydom products have set the bench mark for SSR performance and reliability world wide. In addition to **award winning designs**, Crydom has acquired an impressive list of **patents** related to SSRs and Solid State Controls, while continuing to develop new circuit and technology-related inventions as part of **extensive R&D programs**.

To learn more about Crydom SSR technology and products, or how an alliance with Crydom can contribute to the success of your project, visit **www.crydom.com** or contact your authorized Crydom Distributor or Crydom Customer Service Representative today.

DIN RAIL MOUNTED AC & DC OUTPUT SOLID STATE RELAYS

SeriesOne DR Single & Dual Channel SSRs

Crydom's **SeriesOne DR** Solid State Relays incorporate proprietary thermal management technology resulting in exceptional output ratings of 6 and 12 amps at 40 °C ambient in compact 11 and 18 mm wide DIN rail mounted housings. Ideally suited for heating , lighting or motion control applications where DIN rail space may be limited, the unique design provides both greater power density than previously available in DIN rail mounted Solid State Relays, and greater safety for personnel by eliminating exposed hot metal surfaces typical of SSRs utilizing external heat sinks to attain comparable ratings.

SeriesOne DR SSRs feature all solid state design with optical coupling, AC or DC inputs with LED input status indicator, mounting to standard 35 mm DIN rail, RoHS compliance, CE certification, and UL/cUL recognition including General Use, Motor Controller and 100k cycle endurance ratings.

SeriesOne DR Single Channel Outputs

SeriesOne DR Single Channel output SSRs incorporate either rugged SCRs for heavy AC industrial loads up to 600 VAC, or power FETs for superior performance with DC loads up to 100 VDC. Single channel models are available with output ratings of either 6 Amps at 40 °C in an 11 mm package, or 12 Amps at 40 °C in an 18 mm wide package. AC output models also offer either zero voltage turn-on for resistive loads or random turn-on for inductive loads. Both AC and DC control voltages are available.

SeriesOne DR Dual Channel Outputs

SeriesOne DR Dual Channel AC output SSRs also feature SCRs for superior performance. The two independent channels are housed in an 18 mm package with output ratings up to 6 Amps rms per channel at 40 °C, 600 VAC, in zero voltage or random turn-on, and 4 to 32 VDC control voltage.

For more information, technical support or questions about adapted assemblies, contact your local Crydom Distributor or Regional Sales office.

crydom®

SeriesOne DR Single Channel
AC/DC Output

- 6 & 12 Amps output power rating
- 60 & 100 VDC, 24 to 600 VAC operating voltage ratings
- 4-32 VDC, 24, 120 & 230 VAC control input options available
- IP20 housing with unique integrated heat sink design (Patent Pending)
- AC Output versions with Zero Voltage Turn-On for resistive loads and Random Turn-On for inductive loads
- High power density for multiple units
- UL & cUL approved including General Purpose and Motor Controller ratings
- CE & RoHS compliant

OUTPUT SPECIFICATIONS [A]	DR06x06	DR10x06	DR24x06	DR48x06	DR06x12	DR10x12	DR24x12	DR48x12
Operating Voltage (47-63Hz AC Only)	**1-60 VDC**	**1-100 VDC**	**24-280 VAC**	**48-600 VAC**	**1-60 VDC**	**1-100 VDC**	**24-280 VAC**	**48-600 VAC**
General Use Current Rating [B] (Resistive Load)	**6 ADC**	**6 ADC**	**6 Arms**	**6 Arms**	**12 ADC**	**12 ADC**	**12 Arms**	**12 Arms**
UL Motor Controller Ratings @ 240 VAC [HP]	N/A	N/A	1/6	1/6	N/A	N/A	1/3	1/3
Min. Load Current	2.5 mA DC	2.5 mA DC	0.15 Arms	0.15 Arms	2.5 mA DC	2.5 mA DC	0.15 Arms	0.15 Arms
Max.Off-State Leakage Current @ Rated Voltage	0.1 mA DC	0.1 mA DC	0.1 mArms	0.1 mArms	0.1 mA DC	0.1 mA DC	0.1 mArms	0.2 mArms
Max. Surge Current [Apk] (Duration in ms)	60 (10)	60 (10)	300 (16.6)	300 (16.6)	100 (10)	100 (10)	750 (16.6)	750 (16.6)
Max. Surge Current [Apk] (Duration in ms)	N/A	N/A	285 (20)	285 (20)	N/A	N/A	715 (20)	715 (20)
Transient Overvoltage [Vpk]	N/A	N/A	600	1200	N/A	N/A	600	1200
Max. On-State Voltage Drop @ Rated Current [Vpk]	0.6	0.6	1.3	1.3	0.5	0.5	1.3	1.3
On-State Resistence at rated load current [Ohm]	0.1	0.1	N/A	N/A	0.045	0.045	N/A	N/A
Max. I^2t for Fusing (10/8.3 ms) [A^2sec]	N/A	N/A	410/375	410/375	N/A	N/A	2560/2330	2560/2330
Min. Off-State dv/dt @ Max. Rated Voltage [V/µsec] [C]	N/A	N/A	500	500	N/A	N/A	500	500
Maximum Turn-On Time [D]	600 (µsec)	600 (µsec)	1/2 cycle	1/2 cycle	1 (msec)	1 (msec)	1/2 cycle	1/2 cycle
Maximum Turn-Off Time [E]	300 (µsec)	300 (µsec)	1/2 cycle	1/2 cycle	300 (µsec)	300 (µsec)	1/2 cycle	1/2 cycle
Power Factor (Minimum) with Maximum Load	N/A	N/A	0.5	0.5	N/A	N/A	0.5	0.5

INPUT SPECIFICATIONS [A]	DRxxD06	DRxxE06	DRxxB06	DRxxA06	DRxxD12	DRxxE12	DRxxB12	DRxxA12
Control Voltage Range	4-32 VDC	18-36 VAC	90-140 VAC	200-265 VAC	4-32 VDC	18-36 VAC	90-140 VAC	200-265 VAC
Minimum Turn-On Voltage	4 VDC	18 VAC	90 VAC	200 VAC	4 VDC	18 VAC	90 VAC	200 VAC
Minimum Turn-Off Voltage	1 VDC	4 VAC	10 VAC	90 VAC	1 VDC	4 VAC	10 VAC	90 VAC
Reverse Polarity Protection	Yes	N/A	N/A	N/A	Yes	N/A	N/A	N/A
Typical Input Current	10 mA @ 24 VDC [F]	6 mA @ 24 VAC	5 mA @ 120 VAC	3 mA @ 230 VAC	10 mA @ 24 VDC [F]	6mA @ 24 VAC	5 mA @ 120 VAC	3 mA @ 230 VAC

GENERAL SPECIFICATIONS [A]	DRxxx06	DRxxx12
Dielectric Strength, Input to Output. AC Output Versions (50/60Hz) [Vrms]	4000	
Dielectric Strength, Input to Output. DC Output Versions [Vrms]	2500	
Dielectric Strength, Input-Output to Case (50/60Hz) [Vrms]	2500	
Minimum Insulation Resistance (@ 500 VDC) [Ohm]	10^9	
Maximum Capacitance, Input/Output [pF]	10	
Ambient Operating Temperature Range [°C]	-30 to 80	
Ambient Storage Temperature Range [°C]	-30 to 125	
Weight (typical) [oz] (gr)	1.76 (50)	3.17 (90)
Housing Material	UL 94 V0 Self-extinguishing	
Input Terminal Wire Capacity	22 AWG minimum, 16 AWG maximum	
Output Terminal Wire Capacity	22 AWG minimum, 14 AWG x 2 or 12 AWG x1 (standed/solid) maximum	
Maximum Recommended Terminal Screw Torque Input/Output [in/lbs] (Nm)	4.4 (0.5) / 7.0 (0.8)	

GENERAL NOTES

(A) All parameters at 25°C unless otherwise specified.
(B) Minimum spacing required between devices (see derating curves).
(C) Off-State dv/dt test method per EIA/NARM standard RS-443, paragraph 13.11.1.
(D) Turn-On time for Random-type AC Output is 0.1 ms for DC Control Models and 20 ms for AC Control Models.
(E) Turn-Off time for AC output versions with AC control is 30 ms.
(F) Input circuit incorporates active current limitation.
(G) Not all combinations of ratings are available.

Part Number Nomenclature [G]

Series

Max Output Voltage
06: 1 to 60 VDC
10: 1 to 100 VDC
24: 24 to 280 VAC
48: 48 to 600 VAC

Output Current
06: 6 Amps
12: 12 Amps

DR 24 D 12 R

Control Voltage
D: 4 to 32 VDC
A: 208 to 265 VAC
B: 90 to 140 VAC
E: 18 to 36 VAC
} AC Output Only

Options
Blank: Zero Voltage Turn-On
R: Random Turn-On (AC Output Only)

Required for valid part number
For options only and not required for valid part number

Other Crydom products and competitive part number cross-reference available at:
www.crydom.com

Mechanical Dimensions

Tolerances: ± 0.02 in / 0.5 mm
All dimensions are in: inches [millimeters]

FRONT VIEW

For DRxxx06

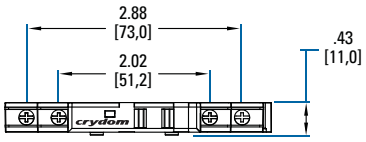

For DRxxx12 or DRDxxD06 versions (H)

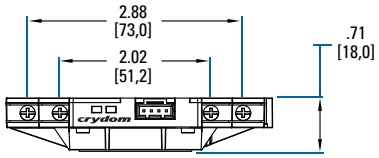

SIDE VIEW

For DRxxx06 or DRxxx12 versions

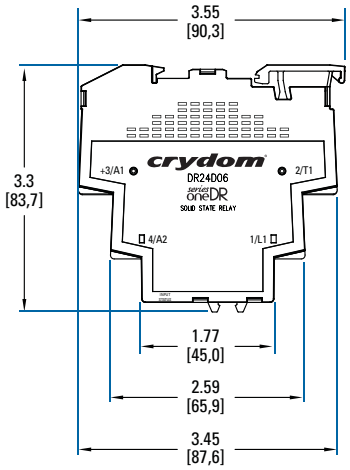

For DRDxxD06 versions

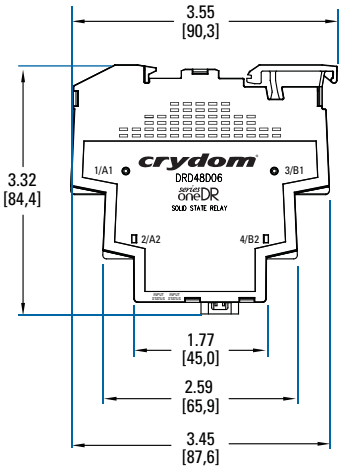

(H) 4 Pin connector for dual channel ouput only. Matting connector: MOLEX 050579404 or equivalent.
(J) No grounding wire required. DC inductive loads must be diode suppressed.

Wiring Diagrams (J)

For DRxxx06 or DRxxx12 versions

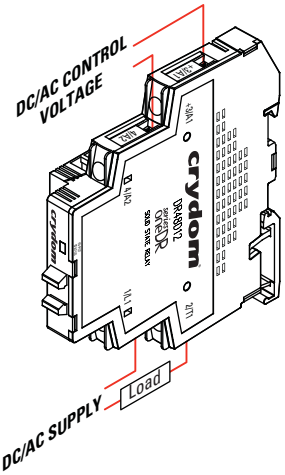

For DRDxxD06 versions

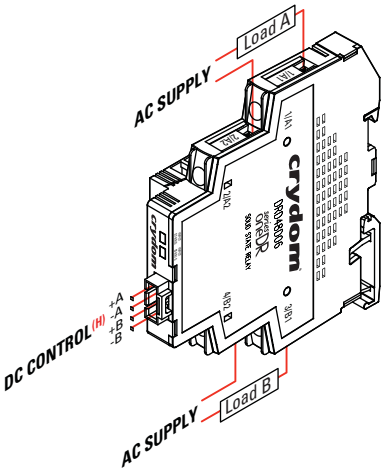

Derating Curves

DRxxx06

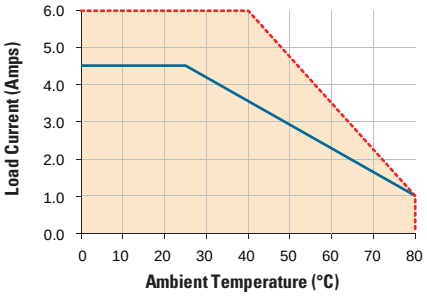

DRxxx12

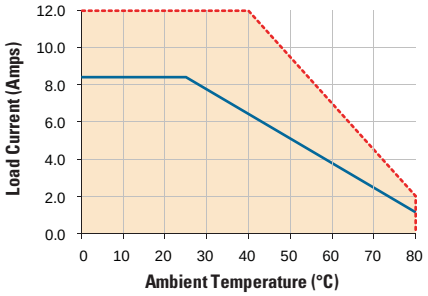

DRDxxD06

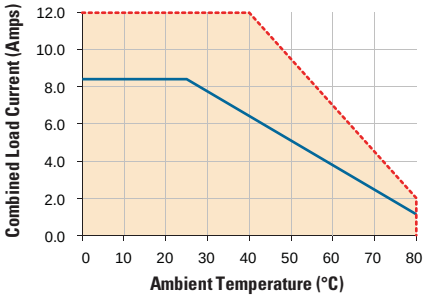

--- Installed Single Unit
— Multiple Units (No Spacing)

Questions? Call or e-mail

Americas +1 (877) 502 5500 **sales@crydom.com**
Europe +44 (0) 1202 606030 **sales-europe@crydom.com**

crydom®

SeriesOne DR Dual Channel
AC Output

- Two independent 6 Amp channels
- DIN rail mount 18 mm wide package
- 4-32 VDC control input
- 24 to 600 VAC operating voltage ratings
- IP20 housing with unique integrated heat sink design (Patent Pending)
- AC Output versions with Zero Voltage Turn-On for resistive loads and Random Turn-On for inductive loads
- High power density for multiple units
- UL & cUL approved including General Purpose and Motor Controller ratings
- CE & RoHS compliant

OUTPUT SPECIFICATIONS [A]	DRD24D06	DRD48D06
Operating Voltage (47-63Hz) [VAC]	**24-280**	**48-600**
General Use Current Rating [B] (Resistive Load)	**6 Arms per channel**	**6 Arms per channel**
UL Motor Controller Ratings @ 240 VAC [HP]	1/6	1/6
Minimum Load Current [Arms]	0.15	0.15
MaximumOff-State Leakage Current @ Rated Voltage [mArms]	0.1	0.2
Maximum Surge Current [Apk] @ 60 Hz (Duration in ms)	750 (16.6)	750 (16.6)
Maximum Surge Current [Apk] @ 50 Hz (Duration in ms)	715 (20)	715 (20)
Transient Overvoltage [Vpk]	600	1200
Maximum On-State Voltage Drop @ Rated Current [Vpk]	1.3	1.3
Maximum I^2t for Fusing (10/8.3 ms) [A^2sec]	2560/2330	2560/2330
Minimum Off-State dv/dt @ Maximum Rated Voltage [V/µsec] [C]	500	500
Maximum Turn-On Time [D]	1/2 cycle	1/2 cycle
Maximum Turn-Off Time	1/2 cycle	1/2 cycle
Power Factor (Minimum) with Maximum Load	0.5	0.5

INPUT SPECIFICATIONS [A]	DRDxxD06
Control Voltage Range [VDC]	4-32
Min. Turn-On Voltage [VDC]	4
Min. Turn-Off Voltage [VDC]	1
Reverse Polarity Protection	Yes
Typical Input Current	10 mA @ 24 VDC [F]

GENERAL SPECIFICATIONS [A]	DRDxxD06
Dielectric Strength, Input to Output (50/60Hz) [Vrms]	2500
Dielectric Strength, Input-Output to Case (50/60Hz) [Vrms]	2500
Minimum Insulation Resistance (@ 500 VDC) [Ohm]	10^9
Maximum Capacitance, Input/Output [pF]	10
Ambient Operating Temperature Range [°C]	-30 to 80
Ambient Storage Temperature Range [°C]	-30 to 125
Weight (typical) [oz] (gr)	3.17 (90)
Housing Material	UL 94 V0 Self-extinguishing
Input Terminal Wire Capacity	22 AWG minimum, 16 AWG maximum
Output Terminal Wire Capacity	22 AWG minimum, 14 AWG x 2 or 12AWG x1 (standed/solid) maximum
Maximum Recommended Terminal Screw Torque Input/Output [in/lbs] (Nm)	4.4 (0.5) / 7.0 (0.8)

ID Marker Strips
CNLB, CNLN, CNL2

Packages of 10 plastic strips comprising 10 individual markers which can be placed for easy identification during the use of multiple units.

Blank Strips
Part no.: CNLB

Numbered 1 to 10 Strips
Part no.: CNLN

Numbered 11 to 20 Strips
Part no.: CNL2

GENERAL NOTES

(A) All parameters at 25°C unless otherwise specified.
(B) Minimum spacing required between devices (see derating curves).
(C) Off-State dv/dt test method per EIA/NARM standard RS-443, paragraph 13.11.1.
(D) Turn-On time is 0.1 ms for Random-type DC Control Models.
(F) Input circuit incorporates active current limitation.

To view available Installation Sheet scan the QR code with your smartphone or visit **www.crydom.com**

Part Number Nomenclature

Series — DRD

Max Output Voltage — 24
- **24:** 24 to 280 VAC
- **48:** 48 to 600 VAC

Control Voltage — D
- **D:** 4 to 32 VDC

Output Current — 06
- **06:** 6 Amps

Options — R
- **Blank:** Zero Voltage Turn-On
- **R:** Random Turn-On

Required for valid part number

For options only and not required for valid part number

Other Crydom products and competitive part number cross-reference available at:
www.crydom.com

crydom®

crydom®

Across the Globe

AMERICAS

USA & CANADA

Crydom Inc
2320 Paseo de las Americas,
Suite 201
San Diego CA 92154

Sales Support
Tel.: +1 (877) 502 5500
Fax: +1 (619) 210 1590
sales@crydom.com

Tech Support
Tel.: +1 (877) 702 7700
support@crydom.com

MEXICO

Automatismo Crouzet S.A. de C.V.
Calzada Zavaleta 2505 - C
Col Sta Cruz Buenavista
C.P. 72150 - Puebla
MEXICO
Tel.: +52 (222) 409 7000
Fax: +52 (222) 409 7810
01 800 087 6333
sales-mx@crydom.com

SOUTHERN AND CENTRAL AMERICAN COUNTRIES

CST Latinoamerica
Alameda Rio Negro, 1030,
18º andar – Conjunto 1803
CEP: 06454-000
Barueri - SP
BRASIL
Tel.: +55 (11) 4195 1384
Fax: +55 (11) 4195 1834
info@cst-latinoamerica.com

EUROPE MIDDLE EAST AFRICA

UNITED KINGDOM

Crydom SSR Ltd
Arena Business Centre
Holyrood, Close
Poole, Dorset BH17 7FJ

Sales Support
Tel.: +44 (0) 1202 606030
Fax: +44 (0) 1202 606035
sales-europe@crydom.com

Tech Support
tech-europe@crydom.com

AUSTRIA & SWITZERLAND

Tel.: +44 (0) 1202 606030
Fax: +44 (0) 1202 606035
vertrieb@crydom.com

GERMANY

Tel.: +49 (0) 180 3000 506
Fax: +49 (0) 180 3205 227
vertrieb@crydom.com

BELGIUM

Tel.: +32 (0) 2 460 4413
Fax: +32 (0) 2 461 2614
sales-europe@crydom.com

FRANCE

Tel.: +33 (0) 810 123 963
Fax: +33 (0) 810 057 605
sales-europe@crydom.com

ITALY

Tel.: +39 (0) 2 665 99 260
Fax: +39 (0) 2 665 99 268
sales-europe@crydom.com

THE NETHERLANDS

Tel.: +31 (0) 71 582 0068
Fax: +31 (0) 71 542 1648
sales-europe@crydom.com

SPAIN

Tel.: +34 902 876 217
Fax: +34 902 876 219
sales-europe@crydom.com

MIDDLE EAST, AFRICA AND OTHER EUROPEAN COUNTRIES

Tel.: +44 (0) 1202 606030
Fax: +44 (0) 1202 606035
sales-europe@crydom.com

ASIA PACIFIC

CHINA & HONG KONG

Custom Sensors & Technologies Asia (Shanghai) Ltd.
2 Floor, Innovation Building,
No.1009, Yi Shan Road,
Shanghai, 200233
Tel.: +86 (21) 2401 7766
Fax: +86 (21) 6249 0701
sales-cn@crydom.com

TAIWAN

Custom Sensors & Technologies
3F, No. 39, Ji-Hu Road
Nei-Hu Dist.
Taipei 114, Taiwan
Tel.: +886 2 8751 6388
Fax: +886 2 2657 8725
taiwan@cstsensors.com

SOUTH KOREA

Custom Sensors & Technologies
5F, Jeil Bldg.,
94-46 Youngdeungpo-dong 7-ga
Youngdeungpo-gu,
Seoul, 150-037
South Korea
Tel.: +82 2 2629 8312
Fax: +82 2 2629 8310
korea@cstsensors.com

INDIA

CST Sensors India Pvt Ltd
Unit 1301 and 1302 Prestige
Meridian II
30 M.G.Road,
Bangalore - 560001
INDIA
Tel.: +91 (80) 4113 2204/05
Fax: +91 (80) 4113 2206
india@cstsensors.com

OTHER ASIAN AND PACIFIC COUNTRIES

Custom Sensors & Technologies
3F, No. 39, Ji-Hu Road
Nei-Hu Dist.
Taipei 114, Taiwan
Tel.: +886 2 8751 6388
Fax: +886 2 2657 8725
eap@cstsensors.com

CAT/CR/SO/EN

Distributed by :

A brand of CST
CUSTOM SENSORS & TECHNOLOGIES

© 2010 Crydom Inc., All Rights Reserved.

Specifications are subject to change without prior notice. Crydom and the Crydom logo are registered trademarks of Crydom Inc.

08/2010