STM32F756xx

ARM®-based Cortex®-M7 32b MCU+FPU, 462DMIPS, up to 1MB Flash/320+16+ 4KB RAM, crypto, USB OTG HS/FS, ethernet, 18 TIMs, 3 ADCs, 25 com itf, cam & LCD

Datasheet - production data

Features

- Core: ARM® 32-bit Cortex®-M7 CPU with FPU, adaptive real-time accelerator (ART Accelerator™) and L1-cache: 4KB data cache and 4KB instruction cache, allowing 0-wait state execution from embedded Flash memory and external memories, frequency up to 216 MHz, MPU, 462 DMIPS/2.14 DMIPS/MHz (Dhrystone 2.1), and DSP instructions.
- Memories
  - Up to 1MB of Flash memory
  - 1024 bytes of OTP memory
  - SRAM: 320KB (including 64KB of data TCM RAM for critical real-time data) + 16KB of instruction TCM RAM (for critical real-time routines) + 4KB of backup SRAM (available in the lowest power modes)
  - Flexible external memory controller with up to 32-bit data bus: SRAM, PSRAM, SDRAM/LPSDR SDRAM, NOR/NAND memories
- Dual mode Quad-SPI
- LCD parallel interface, 8080/6800 modes
- LCD-TFT controller up to XGA resolution with dedicated Chrom-ART Accelerator™ for enhanced graphic content creation (DMA2D)
- Clock, reset and supply management
  - 1.7 V to 3.6 V application supply and I/Os
  - POR, PDR, PVD and BOR
  - Dedicated USB power
  - 4-to-26 MHz crystal oscillator
  - Internal 16 MHz factory-trimmed RC (1% accuracy)
  - 32 kHz oscillator for RTC with calibration
  - Internal 32 kHz RC with calibration
- Low-power
  - Sleep, Stop and Standby modes
  - V_{BAT} supply for RTC, 32×32 bit backup registers + 4KB backup SRAM
- 3×12-bit, 2.4 MSPS ADC: up to 24 channels and 7.2 MSPS in triple interleaved mode
- 2×12-bit D/A converters
- Up to 18 timers: up to thirteen 16-bit (1x low-power 16-bit timer available in Stop mode) and two 32-bit timers, each with up to 4 IC/OC/PWM or pulse counter and quadrature (incremental) encoder input. All 15 timers running up to 216 MHz. 2x watchdogs, SysTick timer

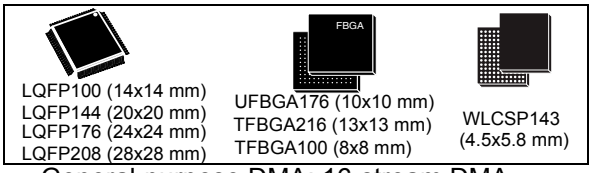

- General-purpose DMA: 16-stream DMA controller with FIFOs and burst support
- Debug mode
  - SWD & JTAG interfaces
  - Cortex®-M7 Trace Macrocell™
- Up to 168 I/O ports with interrupt capability
  - Up to 164 fast I/Os up to 108 MHz
  - Up to 166 5 V-tolerant I/Os
- Up to 25 communication interfaces
  - Up to 4× I^2C interfaces (SMBus/PMBus)
  - Up to 4 USARTs/4 UARTs (27 Mbit/s, ISO7816 interface, LIN, IrDA, modem control)
  - Up to 6 SPIs (up to 50 Mbit/s), 3 with muxed simplex I^2S for audio class accuracy via internal audio PLL or external clock
  - 2 x SAIs (serial audio interface)
  - 2 × CANs (2.0B active) and SDMMC interface
  - SPDIFRX interface
  - HDMI-CEC
- Advanced connectivity
  - USB 2.0 full-speed device/host/OTG controller with on-chip PHY
  - USB 2.0 high-speed/full-speed device/host/OTG controller with dedicated DMA, on-chip full-speed PHY and ULPI
  - 10/100 Ethernet MAC with dedicated DMA: supports IEEE 1588v2 hardware, MII/RMII
- 8- to 14-bit parallel camera interface up to 54 Mbyte/s
- Cryptographic acceleration: hardware acceleration for AES 128, 192, 256, triple DES, HASH (MD5, SHA-1, SHA-2), and HMAC
- True random number generator
- CRC calculation unit
- RTC: subsecond accuracy, hardware calendar
- 96-bit unique ID

Table 1. Device summary

Reference	Part number
STM32F756xx	STM32F756VG, STM32F756ZG, STM32F756IG, STM32F756BG, STM32F756NG

This is information on a product in full production. www.st.com

Contents

1 Description 12

1.1 Full compatibility throughout the family 15

2 Functional overview 17

2.1 ARM® Cortex®-M7 with FPU 17

2.2 Memory protection unit 17

2.3 Embedded Flash memory 18

2.4 CRC (cyclic redundancy check) calculation unit 18

2.5 Embedded SRAM 18

2.6 AXI-AHB bus matrix 18

2.7 DMA controller (DMA) 19

2.8 Flexible memory controller (FMC) 20

2.9 Quad-SPI memory interface (QUADSPI) 21

2.10 LCD-TFT controller 21

2.11 Chrom-ART Accelerator™ (DMA2D) 21

2.12 Nested vectored interrupt controller (NVIC) 22

2.13 External interrupt/event controller (EXTI) 22

2.14 Clocks and startup 22

2.15 Boot modes 23

2.16 Power supply schemes 23

2.17 Power supply supervisor 24

2.17.1 Internal reset ON 24

2.17.2 Internal reset OFF 25

2.18 Voltage regulator 26

2.18.1 Regulator ON 26

2.18.2 Regulator OFF 27

2.18.3 Regulator ON/OFF and internal reset ON/OFF availability 30

2.19 Real-time clock (RTC), backup SRAM and backup registers 30

2.20 Low-power modes 31

2.21 V_{BAT} operation 32

2.22 Timers and watchdogs 32

2.22.1 Advanced-control timers (TIM1, TIM8) 34

2.22.2 General-purpose timers (TIMx) 34
2.22.3 Basic timers TIM6 and TIM7 35
2.22.4 Low-power timer (LPTIM1) 35
2.22.5 Independent watchdog 35
2.22.6 Window watchdog 35
2.22.7 SysTick timer 35
2.23 Inter-integrated circuit interface (I^2C) 36
2.24 Universal synchronous/asynchronous receiver transmitters (USART) . . 37
2.25 Serial peripheral interface (SPI)/inter- integrated sound interfaces (I2S) . 38
2.26 Serial audio interface (SAI) 38
2.27 SPDIFRX Receiver Interface (SPDIFRX) 39
2.28 Audio PLL (PLLI2S) 39
2.29 Audio and LCD PLL(PLLSAI) 40
2.30 SD/SDIO/MMC card host interface (SDMMC) 40
2.31 Ethernet MAC interface with dedicated DMA and IEEE 1588 support . . . 40
2.32 Controller area network (bxCAN) 41
2.33 Universal serial bus on-the-go full-speed (OTG_FS) 41
2.34 Universal serial bus on-the-go high-speed (OTG_HS) 41
2.35 High-definition multimedia interface (HDMI) - consumer electronics control (CEC) 42
2.36 Digital camera interface (DCMI) 42
2.37 Cryptographic acceleration 42
2.38 Random number generator (RNG) 43
2.39 General-purpose input/outputs (GPIOs) 43
2.40 Analog-to-digital converters (ADCs) 43
2.41 Temperature sensor 44
2.42 Digital-to-analog converter (DAC) 44
2.43 Serial wire JTAG debug port (SWJ-DP) 44
2.44 Embedded Trace Macrocell™ 45

3 Pinouts and pin description 46

4 Memory mapping 90

5 Electrical characteristics 95

5.1 Parameter conditions 95
5.1.1 Minimum and maximum values 95
5.1.2 Typical values 95
5.1.3 Typical curves 95
5.1.4 Loading capacitor 95
5.1.5 Pin input voltage 95
5.1.6 Power supply scheme 96
5.1.7 Current consumption measurement 97
5.2 Absolute maximum ratings 97
5.3 Operating conditions 99
5.3.1 General operating conditions 99
5.3.2 VCAP1/VCAP2 external capacitor 101
5.3.3 Operating conditions at power-up / power-down (regulator ON) 102
5.3.4 Operating conditions at power-up / power-down (regulator OFF) 102
5.3.5 Reset and power control block characteristics 102
5.3.6 Over-drive switching characteristics 104
5.3.7 Supply current characteristics 104
5.3.8 Wakeup time from low-power modes 122
5.3.9 External clock source characteristics 123
5.3.10 Internal clock source characteristics 128
5.3.11 PLL characteristics 129
5.3.12 PLL spread spectrum clock generation (SSCG) characteristics 132
5.3.13 Memory characteristics 134
5.3.14 EMC characteristics 136
5.3.15 Absolute maximum ratings (electrical sensitivity) 138
5.3.16 I/O current injection characteristics 138
5.3.17 I/O port characteristics 139
5.3.18 NRST pin characteristics 145
5.3.19 TIM timer characteristics 146
5.3.20 RTC characteristics 146
5.3.21 12-bit ADC characteristics 146
5.3.22 Temperature sensor characteristics 152
5.3.23 V_{BAT} monitoring characteristics 152
5.3.24 Reference voltage 152
5.3.25 DAC electrical characteristics 153
5.3.26 Communications interfaces 155
5.3.27 FMC characteristics 170

5.3.28 Quad-SPI interface characteristics 190
5.3.29 Camera interface (DCMI) timing specifications 192
5.3.30 LCD-TFT controller (LTDC) characteristics 193
5.3.31 SD/SDIO MMC card host interface (SDMMC) characteristics 195

6 Package information 197

6.1 LQFP100, 14 x 14 mm low-profile quad flat package information 197
6.2 TFBGA100, 8 x 8 x 0.8 mm thin fine-pitch ball grid array package information 200
6.3 WLCSP143, 4.539x 5.849 mm, 0.4 mm pitch wafer level chip scale package information 203
6.4 LQFP144, 20 x 20 mm low-profile quad flat package information 206
6.5 LQFP176, 24 x 24 mm low-profile quad flat package information 209
6.6 LQFP208, 28 x 28 mm low-profile quad flat package information 213
6.7 UFBGA 176+25, 10 x 10 x 0.65 mm ultra thin-pitch ball grid array package information 217
6.8 TFBGA216, 13 × 13 × 0.8 mm thin fine-pitch ball grid array package information 220
6.9 Thermal characteristics 223

7 Part numbering 224

Appendix A Recommendations when using internal reset OFF 225

A.1 Operating conditions 225

Revision history 226

List of tables

Table 1. Device summary . . . 1
Table 2. STM32F756xx features and peripheral counts . . . 13
Table 3. Voltage regulator configuration mode versus device operating mode . . . 27
Table 4. Regulator ON/OFF and internal reset ON/OFF availability . . . 30
Table 5. Voltage regulator modes in Stop mode . . . 31
Table 6. Timer feature comparison . . . 33
Table 7. I2C implementation . . . 36
Table 8. USART implementation . . . 37
Table 9. Legend/abbreviations used in the pinout table . . . 54
Table 10. STM32F756xx pin and ball definition . . . 54
Table 11. FMC pin definition . . . 74
Table 12. STM32F756xx alternate function mapping . . . 77
Table 13. STM32F756xx register boundary addresses . . . 91
Table 14. Voltage characteristics . . . 97
Table 15. Current characteristics . . . 98
Table 16. Thermal characteristics . . . 98
Table 17. General operating conditions . . . 99
Table 18. Limitations depending on the operating power supply range . . . 101
Table 19. VCAP1/VCAP2 operating conditions . . . 102
Table 20. Operating conditions at power-up / power-down (regulator ON) . . . 102
Table 21. Operating conditions at power-up / power-down (regulator OFF) . . . 102
Table 22. reset and power control block characteristics . . . 103
Table 23. Over-drive switching characteristics . . . 104
Table 24. Typical and maximum current consumption in Run mode, code with data processing running from ITCM RAM, regulator ON . . . 105
Table 25. Typical and maximum current consumption in Run mode, code with data processing running from Flash memory (ART ON except prefetch / L1-cache ON) or SRAM on AXI (L1-cache ON), regulator ON . . . 106
Table 26. Typical and maximum current consumption in Run mode, code with data processing running from Flash memory or SRAM on AXI (L1-cache disabled), regulator ON . . . 107
Table 27. Typical and maximum current consumption in Run mode, code with data processing running from Flash memory on ITCM interface (ART disabled), regulator ON . . . 108
Table 28. Typical and maximum current consumption in Run mode, code with data processing running from Flash memory (ART ON except prefetch / L1-cache ON) or SRAM on AXI (L1-cache ON), regulator OFF . . . 109
Table 29. Typical and maximum current consumption in Sleep mode, regulator ON . . . 110
Table 30. Typical and maximum current consumption in Sleep mode, regulator OFF . . . 110
Table 31. Typical and maximum current consumptions in Stop mode . . . 111
Table 32. Typical and maximum current consumptions in Standby mode . . . 112
Table 33. Typical and maximum current consumptions in V_{BAT} mode . . . 113
Table 34. Switching output I/O current consumption . . . 117
Table 35. Peripheral current consumption . . . 119
Table 36. Low-power mode wakeup timings . . . 122
Table 37. High-speed external user clock characteristics . . . 123
Table 38. Low-speed external user clock characteristics . . . 124
Table 39. HSE 4-26 MHz oscillator characteristics . . . 125
Table 40. LSE oscillator characteristics (f_{LSE} = 32.768 kHz) . . . 126
Table 41. HSI oscillator characteristics . . . 128

Table 42. LSI oscillator characteristics . . . 129
Table 43. Main PLL characteristics. . . . 129
Table 44. PLLI2S characteristics . . . 130
Table 45. PLLISAI characteristics. . . . 131
Table 46. SSCG parameters constraint . . . 132
Table 47. Flash memory characteristics . . . 134
Table 48. Flash memory programming. . . . 134
Table 49. Flash memory programming with VPP . . . 135
Table 50. Flash memory endurance and data retention . . . 136
Table 51. EMS characteristics . . . 136
Table 52. EMI characteristics . . . 137
Table 53. ESD absolute maximum ratings . . . 138
Table 54. Electrical sensitivities . . . 138
Table 55. I/O current injection susceptibility . . . 139
Table 56. I/O static characteristics . . . 139
Table 57. Output voltage characteristics . . . 142
Table 58. I/O AC characteristics . . . 143
Table 59. NRST pin characteristics . . . 145
Table 60. TIMx characteristics . . . 146
Table 61. RTC characteristics . . . 146
Table 62. ADC characteristics . . . 146
Table 63. ADC static accuracy at f_{ADC} = 18 MHz. . . . 148
Table 64. ADC static accuracy at f_{ADC} = 30 MHz. . . . 148
Table 65. ADC static accuracy at f_{ADC} = 36 MHz. . . . 149
Table 66. ADC dynamic accuracy at f_{ADC} = 18 MHz - limited test conditions . . . 149
Table 67. ADC dynamic accuracy at f_{ADC} = 36 MHz - limited test conditions . . . 149
Table 68. Temperature sensor characteristics . . . 152
Table 69. Temperature sensor calibration values. . . . 152
Table 70. V_{BAT} monitoring characteristics . . . 152
Table 71. internal reference voltage . . . 152
Table 72. Internal reference voltage calibration values . . . 153
Table 73. DAC characteristics . . . 153
Table 74. Minimum I2CCLK frequency in all I2C modes . . . 155
Table 75. I2C analog filter characteristics. . . . 156
Table 76. SPI dynamic characteristics . . . 157
Table 77. I^2S dynamic characteristics . . . 160
Table 78. SAI characteristics . . . 162
Table 79. USB OTG full speed startup time . . . 164
Table 80. USB OTG full speed DC electrical characteristics . . . 164
Table 81. USB OTG full speed electrical characteristics . . . 165
Table 82. USB HS DC electrical characteristics . . . 165
Table 83. USB HS clock timing parameters . . . 166
Table 84. Dynamic characteristics: USB ULPI . . . 167
Table 85. Dynamics characteristics: Ethernet MAC signals for SMI. . . . 168
Table 86. Dynamics characteristics: Ethernet MAC signals for RMII . . . 168
Table 87. Dynamics characteristics: Ethernet MAC signals for MII . . . 169
Table 88. Asynchronous non-multiplexed SRAM/PSRAM/NOR read timings . . . 172
Table 89. Asynchronous non-multiplexed SRAM/PSRAM/NOR read - NWAIT timings . . . 172
Table 90. Asynchronous non-multiplexed SRAM/PSRAM/NOR write timings . . . 173
Table 91. Asynchronous non-multiplexed SRAM/PSRAM/NOR write - NWAIT timings. . . . 174
Table 92. Asynchronous multiplexed PSRAM/NOR read timings. . . . 175
Table 93. Asynchronous multiplexed PSRAM/NOR read-NWAIT timings . . . 175

Table 94. Asynchronous multiplexed PSRAM/NOR write timings . . . 176
Table 95. Asynchronous multiplexed PSRAM/NOR write-NWAIT timings . . . 177
Table 96. Synchronous multiplexed NOR/PSRAM read timings . . . 179
Table 97. Synchronous multiplexed PSRAM write timings . . . 181
Table 98. Synchronous non-multiplexed NOR/PSRAM read timings . . . 182
Table 99. Synchronous non-multiplexed PSRAM write timings . . . 184
Table 100. Switching characteristics for NAND Flash read cycles . . . 186
Table 101. Switching characteristics for NAND Flash write cycles . . . 186
Table 102. SDRAM read timings . . . 188
Table 103. LPSDR SDRAM read timings . . . 188
Table 104. SDRAM write timings . . . 189
Table 105. LPSDR SDRAM write timings . . . 190
Table 106. Quad-SPI characteristics in SDR mode . . . 190
Table 107. Quad-SPI characteristics in DDR mode . . . 191
Table 108. DCMI characteristics . . . 192
Table 109. LTDC characteristics . . . 193
Table 110. Dynamic characteristics: SD / MMC characteristics, VDD=2.7V to 3.6V . . . 196
Table 111. Dynamic characteristics: eMMC characteristics, VDD=1.71V to 1.9V . . . 196
Table 112. LQPF100, 14 x 14 mm 100-pin low-profile quad flat package mechanical data . . . 198
Table 113. TFBGA100, 8 x 8 × 0.8 mm thin fine-pitch ball grid array package mechanical data . . . 200
Table 114. TFBGA100 recommended PCB design rules (0.8 mm pitch BGA) . . . 202
Table 115. WLCSP143, 4.539x 5.849 mm, 0.4 mm pitch wafer level chip scale package mechanical data . . . 203
Table 116. WLCSP143 recommended PCB design rules . . . 205
Table 117. LQFP144, 20 x 20 mm, 144-pin low-profile quad flat package mechanical data . . . 206
Table 118. LQFP176, 24 x 24 mm, 176-pin low-profile quad flat package mechanical data . . . 209
Table 119. LQFP208, 28 x 28 mm, 208-pin low-profile quad flat package mechanical data . . . 213
Table 120. UFBGA 176+25, 10 × 10 × 0.65 mm ultra thin fine-pitch ball grid array package mechanical data . . . 217
Table 121. UFBGA176+25 recommended PCB design rules (0.65 mm pitch BGA) . . . 218
Table 122. TFBGA216, 13 × 13 × 0.8 mm thin fine-pitch ball grid array package mechanical data . . . 220
Table 123. TFBGA216 recommended PCB design rules (0.8 mm pitch BGA) . . . 221
Table 124. Package thermal characteristics . . . 223
Table 125. Ordering information scheme . . . 224
Table 126. Limitations depending on the operating power supply range . . . 225
Table 127. Document revision history . . . 226

List of figures

Figure 1. Compatible board design for LQFP100 package . . . 15
Figure 2. STM32F756xx block diagram . . . 16
Figure 3. STM32F756xx AXI-AHB bus matrix architecture . . . 19
Figure 4. VDDUSB connected to VDD power supply . . . 24
Figure 5. VDDUSB connected to external power supply . . . 24
Figure 6. Power supply supervisor interconnection with internal reset OFF . . . 25
Figure 7. PDR_ON control with internal reset OFF . . . 26
Figure 8. Regulator OFF . . . 28
Figure 9. Startup in regulator OFF: slow V_{DD} slope - power-down reset risen after V_{CAP_1}/V_{CAP_2} stabilization . . . 29
Figure 10. Startup in regulator OFF mode: fast V_{DD} slope - power-down reset risen before V_{CAP_1}/V_{CAP_2} stabilization . . . 29
Figure 11. STM32F756Vx LQFP100 pinout . . . 46
Figure 12. STM32F756Vx TFBGA100 ballout . . . 47
Figure 13. STM32F756Zx WLCSP143 ballout . . . 48
Figure 14. STM32F756Zx LQFP144 pinout . . . 49
Figure 15. STM32F756Ix LQFP176 pinout . . . 50
Figure 16. STM32F756Bx LQFP208 pinout . . . 51
Figure 17. STM32F756Ix UFBGA176 ballout . . . 52
Figure 18. STM32F756Nx TFBGA216 ballout . . . 53
Figure 19. Memory map . . . 90
Figure 20. Pin loading conditions . . . 95
Figure 21. Pin input voltage . . . 95
Figure 22. Power supply scheme . . . 96
Figure 23. Current consumption measurement scheme . . . 97
Figure 24. External capacitor C_{EXT} . . . 101
Figure 25. Typical V_{BAT} current consumption (RTC ON/BKP SRAM OFF and LSE in low drive mode) . . . 114
Figure 26. Typical V_{BAT} current consumption (RTC ON/BKP SRAM OFF and LSE in medium low drive mode) . . . 114
Figure 27. Typical V_{BAT} current consumption (RTC ON/BKP SRAM OFF and LSE in medium high drive mode) . . . 115
Figure 28. Typical V_{BAT} current consumption (RTC ON/BKP SRAM OFF and LSE in high drive mode) . . . 115
Figure 29. Typical V_{BAT} current consumption (RTC ON/BKP SRAM OFF and LSE in high medium drive mode) . . . 116
Figure 30. High-speed external clock source AC timing diagram . . . 124
Figure 31. Low-speed external clock source AC timing diagram . . . 125
Figure 32. Typical application with an 8 MHz crystal . . . 126
Figure 33. Typical application with a 32.768 kHz crystal . . . 127
Figure 34. HSI deviation versus temperature . . . 128
Figure 35. LSI deviation versus temperature . . . 129
Figure 36. PLL output clock waveforms in center spread mode . . . 133
Figure 37. PLL output clock waveforms in down spread mode . . . 134
Figure 38. FT I/O input characteristics . . . 141
Figure 39. I/O AC characteristics definition . . . 144
Figure 40. Recommended NRST pin protection . . . 145
Figure 41. ADC accuracy characteristics . . . 150

Figure 42. Typical connection diagram using the ADC . . . 150
Figure 43. Power supply and reference decoupling (V_{REF+} not connected to V_{DDA}). . . . 151
Figure 44. Power supply and reference decoupling (V_{REF+} connected to V_{DDA}). . . . 151
Figure 45. 12-bit buffered /non-buffered DAC . . . 155
Figure 46. SPI timing diagram - slave mode and CPHA = 0 . . . 158
Figure 47. SPI timing diagram - slave mode and CPHA = 1 . . . 159
Figure 48. SPI timing diagram - master mode . . . 159
Figure 49. I^2S slave timing diagram (Philips protocol)(1) . . . 161
Figure 50. I^2S master timing diagram (Philips protocol)(1) . . . 161
Figure 51. SAI master timing waveforms . . . 163
Figure 52. SAI slave timing waveforms . . . 163
Figure 53. USB OTG full speed timings: definition of data signal rise and fall time . . . 165
Figure 54. ULPI timing diagram . . . 166
Figure 55. Ethernet SMI timing diagram . . . 167
Figure 56. Ethernet RMII timing diagram . . . 168
Figure 57. Ethernet MII timing diagram . . . 169
Figure 58. Asynchronous non-multiplexed SRAM/PSRAM/NOR read waveforms . . . 171
Figure 59. Asynchronous non-multiplexed SRAM/PSRAM/NOR write waveforms . . . 173
Figure 60. Asynchronous multiplexed PSRAM/NOR read waveforms. . . . 174
Figure 61. Asynchronous multiplexed PSRAM/NOR write waveforms . . . 176
Figure 62. Synchronous multiplexed NOR/PSRAM read timings . . . 178
Figure 63. Synchronous multiplexed PSRAM write timings . . . 180
Figure 64. Synchronous non-multiplexed NOR/PSRAM read timings . . . 182
Figure 65. Synchronous non-multiplexed PSRAM write timings . . . 183
Figure 66. NAND controller waveforms for read access . . . 185
Figure 67. NAND controller waveforms for write access . . . 185
Figure 68. NAND controller waveforms for common memory read access . . . 185
Figure 69. NAND controller waveforms for common memory write access. . . . 186
Figure 70. SDRAM read access waveforms (CL = 1) . . . 187
Figure 71. SDRAM write access waveforms . . . 189
Figure 72. Quad-SPI timing diagram - SDR mode. . . . 192
Figure 73. Quad-SPI timing diagram - DDR mode . . . 192
Figure 74. DCMI timing diagram . . . 193
Figure 75. LCD-TFT horizontal timing diagram . . . 194
Figure 76. LCD-TFT vertical timing diagram . . . 194
Figure 77. SDIO high-speed mode . . . 195
Figure 78. SD default mode . . . 195
Figure 79. LQFP100, 14 x 14 mm 100-pin low-profile quad flat package outline . . . 197
Figure 80. LQFP100, 14 x 14 mm, 100-pin low-profile quad flat package recommended footprint . . . 199
Figure 81. LQFP100, 14 x 14 mm, 100-pin low-profile quad flat package top view example . . . 199
Figure 82. TFBGA100, 8 × 8 × 0.8 mm thin fine-pitch ball grid array package outline. . . . 200
Figure 83. TFBGA100, 8 x 8 x 0.8 mm thin fine-pitch ball grid array package recommended footprint . . . 201
Figure 84. TFBGA100, 8 × 8 × 0.8mm thin fine-pitch ball grid array package top view example . . . 202
Figure 85. WLCSP143, 4.539x 5.849 mm, 0.4 mm pitch wafer level chip scale package outline . . . 203
Figure 86. WLCSP143, 4.539x 5.849 mm, 0.4 mm pitch wafer level chip scale package recommended footprint . . . 204

Figure 87. WLCSP143, 0.4 mm pitch wafer level chip scale package top view example . . . 205
Figure 88. LQFP144, 20 x 20 mm, 144-pin low-profile quad flat package outline . . . 206
Figure 89. LQFP144, 20 x 20 mm, 144-pin low-profile quad flat package recommended footprint . . . 207
Figure 90. LQFP144, 20 x 20mm, 144-pin low-profile quad flat package top view example . . . 208
Figure 91. LQFP176, 24 x 24 mm, 176-pin low-profile quad flat package outline . . . 209
Figure 92. LQFP176, 24 x 24 mm, 176-pin low-profile quad flat package recommended footprint . . . 211
Figure 93. LQFP176, 24 x 24 mm, 176-pin low-profile quad flat package top view example . . . 212
Figure 94. LQFP208, 28 x 28 mm, 208-pin low-profile quad flat package outline . . . 213
Figure 95. LQFP208, 28 x 28 mm, 208-pin low-profile quad flat package recommended footprint . . . 215
Figure 96. LQFP208, 28 x 28 mm, 208-pin low-profile quad flat package top view example . . . 216
Figure 97. UFBGA 176+25, 10 × 10 × 0.65 mm ultra thin fine-pitch ball grid array package outline . . . 217
Figure 98. UFBGA176+25, 10 x 10 x 0.65 mm, ultra fine-pitch ball grid array package recommended footprint . . . 218
Figure 99. UFBGA 176+25, 10 × 10 × 0.6 mm ultra thin fine-pitch ball grid array package top view example . . . 219
Figure 100. TFBGA216, 13 × 13 × 0.8 mm thin fine-pitch ball grid array package outline . . . 220
Figure 101. TFBGA216, 13 x 13 x 0.8 mm thin fine-pitch ball grid array package recommended footprint . . . 221
Figure 102. TFBGA216, 13 × 13 × 0.8 mm thin fine-pitch ball grid array package top view example . . . 222

1 Description

The STM32F756xx devices are based on the high-performance ARM® Cortex®-M7 32-bit RISC core operating at up to 216 MHz frequency. The Cortex®-M7 core features a single floating point unit (SFPU) precision which supports all ARM® single-precision data-processing instructions and data types. It also implements a full set of DSP instructions and a memory protection unit (MPU) which enhances the application security.

The STM32F756xx devices incorporate high-speed embedded memories with a Flash memory up to 1 Mbyte, 320 Kbytes of SRAM (including 64 Kbytes of Data TCM RAM for critical real-time data), 16 Kbytes of instruction TCM RAM (for critical real-time routines), 4 Kbytes of backup SRAM available in the lowest power modes, and an extensive range of enhanced I/Os and peripherals connected to two APB buses, two AHB buses, a 32-bit multi-AHB bus matrix and a multi layer AXI interconnect supporting internal and external memories access.

All the devices offer three 12-bit ADCs, two DACs, a low-power RTC, thirteen general-purpose 16-bit timers including two PWM timers for motor control and one low-power timer available in Stop mode, two general-purpose 32-bit timers, a true random number generator (RNG), and a cryptographic acceleration cell. They also feature standard and advanced communication interfaces.

- Up to four I^2Cs
- Six SPIs, three I^2Ss in duplex mode. To achieve the audio class accuracy, the I^2S peripherals can be clocked via a dedicated internal audio PLL or via an external clock to allow synchronization.
- Four USARTs plus four UARTs
- An USB OTG full-speed and a USB OTG high-speed with full-speed capability (with the ULPI),
- Two CANs
- Two SAI serial audio interfaces
- An SDMMC host interface
- Ethernet and camera interfaces
- LCD-TFT display controller
- Chrom-ART Accelerator™
- SPDIFRX interface
- HDMI-CEC

Advanced peripherals include an SDMMC interface, a flexible memory control (FMC) interface, a Quad-SPI Flash memory interface, a camera interface for CMOS sensors and a cryptographic acceleration cell. Refer to *Table 2: STM32F756xx features and peripheral counts* for the list of peripherals available on each part number.

The STM32F756xx devices operate in the –40 to +105 °C temperature range from a 1.7 to 3.6 V power supply. A dedicated supply input for USB (OTG_FS and OTG_HS) is available on all the packages except LQFP100 for a greater power supply choice.

The supply voltage can drop to 1.7 V with the use of an external power supply supervisor (refer to *Section 2.17.2: Internal reset OFF*). A comprehensive set of power-saving mode allows the design of low-power applications.

The STM32F756xx devices offer devices in 8 packages ranging from 100 pins to 216 pins. The set of included peripherals changes with the device chosen.

These features make the STM32F756xx microcontrollers suitable for a wide range of applications:

- Motor drive and application control,
- Medical equipment,
- Industrial applications: PLC, inverters, circuit breakers,
- Printers, and scanners,
- Alarm systems, video intercom, and HVAC,
- Home audio appliances,
- Mobile applications, Internet of Things,
- Wearable devices: smartwatches.

Figure 2 shows the general block diagram of the device family.

Table 2. STM32F756xx features and peripheral counts

Peripherals		STM32F756Vx		STM32F756Zx		STM32F756Ix		STM32F756Bx		STM32F756Nx	
Flash memory in Kbytes		512	1024	512	1024	512	1024	512	1024	512	1024
SRAM in Kbytes	System	320(240+16+64)									
	Instruction	16									
	Backup	4									
FMC memory controller		Yes(1)									
Ethernet		Yes									
Timers	General-purpose	10									
	Advanced-control	2									
	Basic	2									
	Low-power	1									
Random number generator		Yes									
Communication interfaces	SPI / I^2S	4/3 (simplex)(2)		6/3 (simplex)(2)							
	I^2C	4									
	USART/UART	4/4									
	USB OTG FS	Yes									
	USB OTG HS	Yes									
	CAN	2									
	SAI	2									
	SPDIFRX	4 inputs									
	SDMMC	Yes									
Camera interface		Yes									
LCD-TFT		Yes									
Chrom-ART Accelerator™ (DMA2D)		Yes									
Cryptography		Yes									
GPIOs		82		114		140		168			
12-bit ADC		3									
Number of channels		16		24							

Table 2. STM32F756xx features and peripheral counts (continued)

Peripherals	STM32F756Vx	STM32F756Zx	STM32F756Ix	STM32F756Bx	STM32F756Nx
12-bit DAC Number of channels	Yes 2				
Maximum CPU frequency	216 MHz(3)				
Operating voltage	1.7 to 3.6 V(4)				
Operating temperatures	Ambient temperatures: –40 to +85 °C /–40 to +105 °C				
	Junction temperature: –40 to + 125 °C				
Package	LQFP100 TFBGA100	WLCSP143 LQFP144	UFBGA176 LQFP176	LQFP208	TFBGA216

1. For the LQFP100 package, only FMC Bank1 is available. Bank1 can only support a multiplexed NOR/PSRAM memory using the NE1 Chip Select.
2. The SPI1, SPI2 and SPI3 interfaces give the flexibility to work in an exclusive way in either the SPI mode or the I2S audio mode.
3. 216 MHz maximum frequency for -40°C to + 85°C ambient temperature range (200 MHz maximum frequency for -40°C to + 105°C ambient temperature range).
4. V_{DD}/V_{DDA} minimum value of 1.7 V is obtained when the internal reset is OFF (refer to *Section 2.17.2: Internal reset OFF*).

1.1 Full compatibility throughout the family

The STM32F756xx devices are fully pin-to-pin, compatible with the STM32F4xxxx devices, allowing the user to try different peripherals, and reaching higher performances (higher frequency) for a greater degree of freedom during the development cycle.

Figure 1 give compatible board designs between the STM32F4xx families.

Figure 1. Compatible board design for LQFP100 package

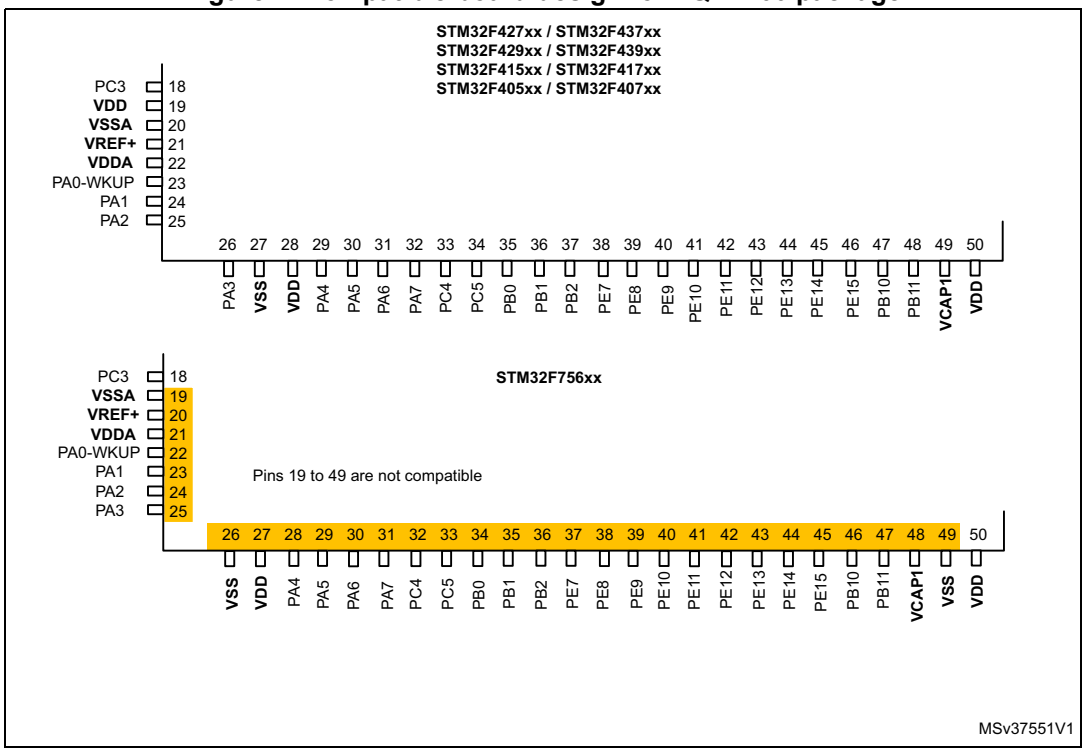

The STM32F756xx LQFP144, LQFP176, LQFP208, TFBGA216, UFBGA176, WLCSP143 packages are fully pin to pin compatible with STM32F4xxxx devices.

Figure 2. STM32F756xx block diagram

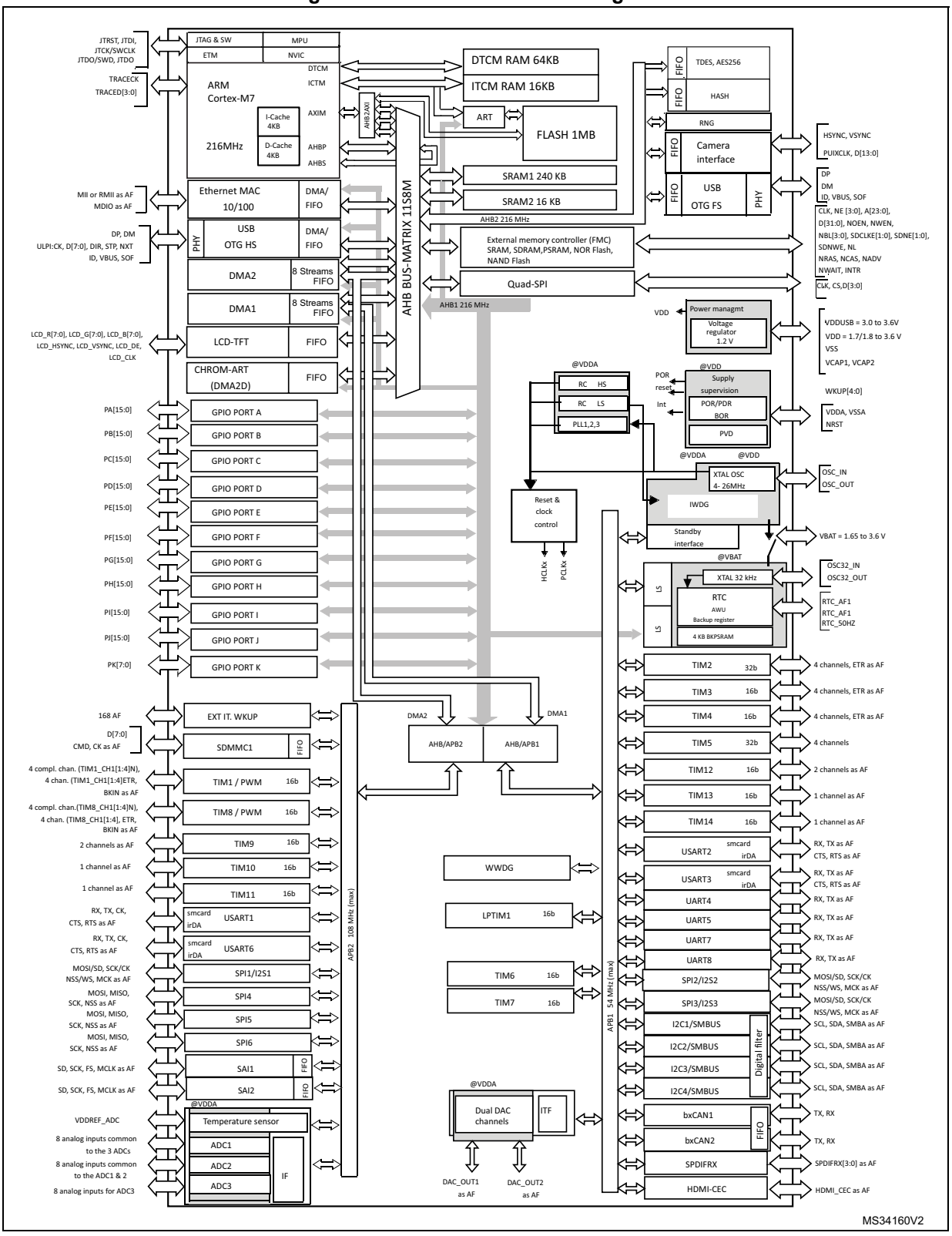

1. The timers connected to APB2 are clocked from TIMxCLK up to 216 MHz, while the timers connected to APB1 are clocked from TIMxCLK either up to 108 MHz or 216 MHz depending on TIMPRE bit configuration in the RCC_DCKCFGR register.

2 Functional overview

2.1 ARM® Cortex®-M7 with FPU

The ARM® Cortex®-M7 with FPU processor is the latest generation of ARM processors for embedded systems. It was developed to provide a low-cost platform that meets the needs of MCU implementation, with a reduced pin count and a low-power consumption, while delivering an outstanding computational performance and low interrupt latency.

The Cortex®-M7 processor is a highly efficient high-performance featuring:

- Six-stage dual-issue pipeline
- Dynamic branch prediction
- Harvard caches (4 Kbytes of I-cache and 4 Kbytes of D-cache)
- 64-bit AXI4 interface
- 64-bit ITCM interface
- 2x32-bit DTCM interfaces

The processor supports the following memory interfaces:

- Tightly Coupled Memory (TCM) interface.
- Harvard instruction and data caches and AXI master (AXIM) interface.
- Dedicated low-latency AHB-Lite peripheral (AHBP) interface.

The processor supports a set of DSP instructions which allow efficient signal processing and complex algorithm execution.

Its single precision FPU (floating point unit) speeds up the software development by using metalanguage development tools, while avoiding saturation.

Figure 2 shows the general block diagram of the STM32F756xx family.

Note: Cortex®-M7 with FPU core is binary compatible with the Cortex®-M4 core.

2.2 Memory protection unit

The memory protection unit (MPU) is used to manage the CPU accesses to memory to prevent one task to accidentally corrupt the memory or resources used by any other active task. This memory area is organized into up to 8 protected areas that can in turn be divided up into 8 subareas. The protection area sizes are between 32 bytes and the whole 4 gigabytes of addressable memory.

The MPU is especially helpful for applications where some critical or certified code has to be protected against the misbehavior of other tasks. It is usually managed by an RTOS (real-time operating system). If a program accesses a memory location that is prohibited by the MPU, the RTOS can detect it and take action. In an RTOS environment, the kernel can dynamically update the MPU area setting, based on the process to be executed.

The MPU is optional and can be bypassed for applications that do not need it.

2.3 Embedded Flash memory

The STM32F756xx devices embed a Flash memory of up to 1 Mbyte available for storing programs and data.

2.4 CRC (cyclic redundancy check) calculation unit

The CRC (cyclic redundancy check) calculation unit is used to get a CRC code using a configurable generator polynomial value and size.

Among other applications, CRC-based techniques are used to verify the data transmission or storage integrity. In the scope of the EN/IEC 60335-1 standard, they offer a mean of verifying the Flash memory integrity. The CRC calculation unit helps to compute a signature of the software during runtime, to be compared with a reference signature generated at link-time and stored at a given memory location.

2.5 Embedded SRAM

All the devices features:

- System SRAM up to 320 Kbytes:
  - SRAM1 on AHB bus Matrix: 240 Kbytes
  - SRAM2 on AHB bus Matrix: 16 Kbytes
  - DTCM-RAM on TCM interface (Tighly Coupled Memory interface): 64 Kbytes for critical real-time data.
- Instruction RAM (ITCM-RAM) 16 Kbytes:
  - It is mapped on TCM interface and reserved only for CPU Execution/Instruction useful for critical real-time routines.

The Data TCM RAM is accessible by the GP-DMAs and peripherals DMAs through specific AHB slave of the CPU.The TCM RAM instruction is reserved only for CPU. It is accessed at CPU clock speed with 0-wait states.

- 4 Kbytes of backup SRAM

  This area is accessible only from the CPU. Its content is protected against possible unwanted write accesses, and is retained in Standby or V_{BAT} mode.

2.6 AXI-AHB bus matrix

The STM32F756xx system architecture is based on 2 sub-systems:

- An AXI to multi AHB bridge converting AXI4 protocol to AHB-Lite protocol:
  - 3x AXI to 32-bit AHB bridges connected to AHB bus matrix
  - 1x AXI to 64-bit AHB bridge connected to the embedded flash
- A multi-AHB Bus-Matrix:
  - The 32-bit multi-AHB bus matrix interconnects all the masters (CPU, DMAs, Ethernet, USB HS, LCD-TFT, and DMA2D) and the slaves (Flash memory, RAM, FMC, Quad-SPI, AHB and APB peripherals) and ensures a seamless and an efficient operation even when several high-speed peripherals work simultaneously.

Figure 3. STM32F756xx AXI-AHB bus matrix architecture

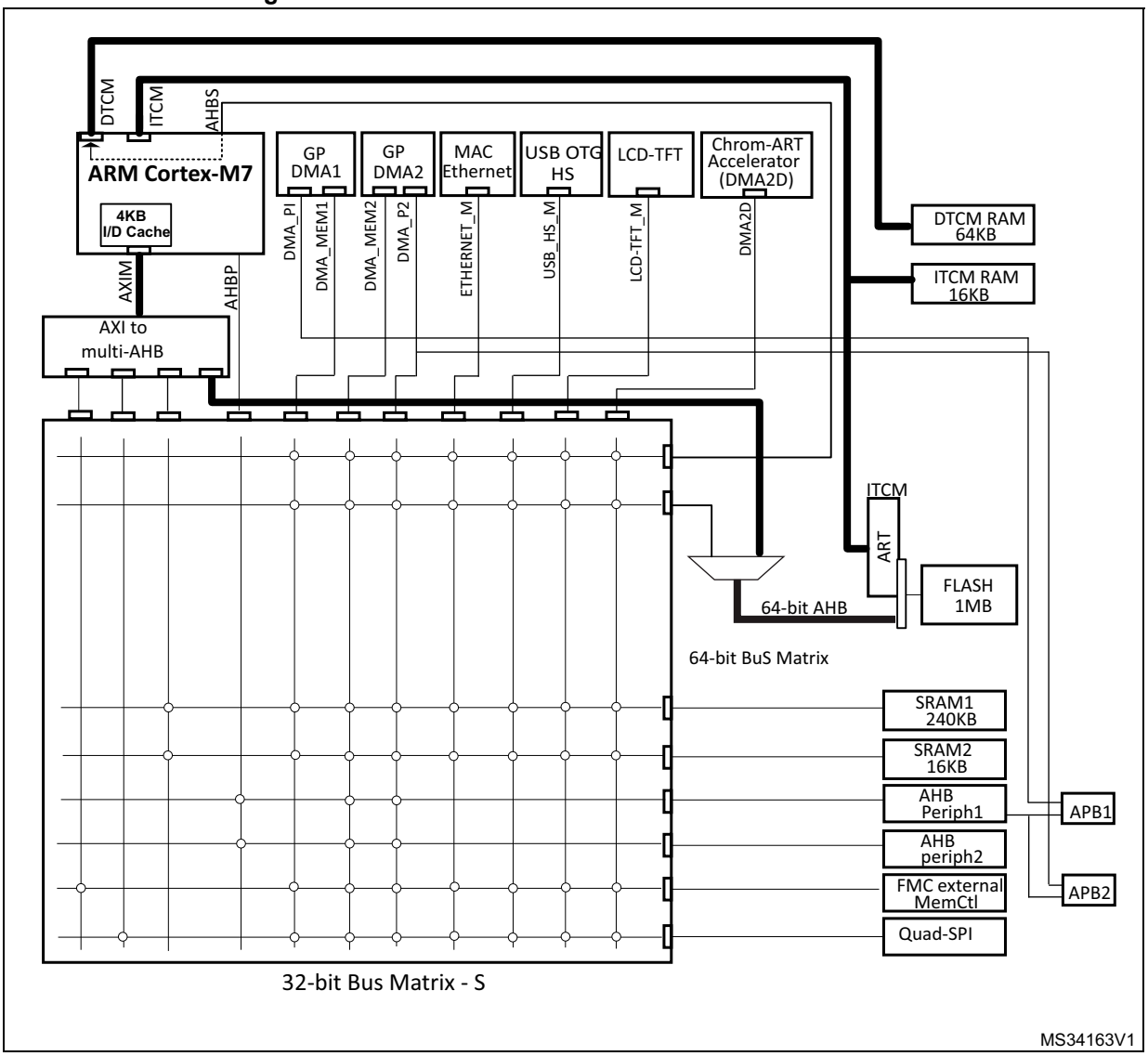

1. The above figure has large wires for 64-bits bus and thin wires for 32-bits bus.

2.7 DMA controller (DMA)

The devices feature two general-purpose dual-port DMAs (DMA1 and DMA2) with 8 streams each. They are able to manage memory-to-memory, peripheral-to-memory and memory-to-peripheral transfers. They feature dedicated FIFOs for APB/AHB peripherals, support burst transfer and are designed to provide the maximum peripheral bandwidth (AHB/APB).

The two DMA controllers support circular buffer management, so that no specific code is needed when the controller reaches the end of the buffer. The two DMA controllers also have a double buffering feature, which automates the use and switching of two memory buffers without requiring any special code.

Each stream is connected to dedicated hardware DMA requests, with support for software trigger on each stream. Configuration is made by software and transfer sizes between source and destination are independent.

The DMA can be used with the main peripherals:

- SPI and I^2S
- I^2C
- USART
- General-purpose, basic and advanced-control timers TIMx
- DAC
- SDMMC
- Cryptographic acceleration
- Camera interface (DCMI)
- ADC
- SAI
- SPDIFRX
- Quad-SPI
- HDMI-CEC

2.8 Flexible memory controller (FMC)

The Flexible memory controller (FMC) includes three memory controllers:

- The NOR/PSRAM memory controller
- The NAND/memory controller
- The Synchronous DRAM (SDRAM/Mobile LPSDR SDRAM) controller

The main features of the FMC controller are the following:

- Interface with static-memory mapped devices including:
  - Static random access memory (SRAM)
  - NOR Flash memory/OneNAND Flash memory
  - PSRAM (4 memory banks)
  - NAND Flash memory with ECC hardware to check up to 8 Kbytes of data
- Interface with synchronous DRAM (SDRAM/Mobile LPSDR SDRAM) memories
- 8-,16-,32-bit data bus width
- Independent Chip Select control for each memory bank
- Independent configuration for each memory bank
- Write FIFO
- Read FIFO for SDRAM controller
- The Maximum FMC_CLK/FMC_SDCLK frequency for synchronous accesses is HCLK/2.

LCD parallel interface

The FMC can be configured to interface seamlessly with most graphic LCD controllers. It supports the Intel 8080 and Motorola 6800 modes, and is flexible enough to adapt to

specific LCD interfaces. This LCD parallel interface capability makes it easy to build cost-effective graphic applications using LCD modules with embedded controllers or high performance solutions using external controllers with dedicated acceleration.

2.9 Quad-SPI memory interface (QUADSPI)

All devices embed a Quad-SPI memory interface, which is a specialized communication interface targetting Single, Dual or Quad-SPI Flash memories. It can work in:

- Direct mode through registers.
- External flash status register polling mode.
- Memory mapped mode.

Up to 256 Mbytes external flash are memory mapped, supporting 8, 16 and 32-bit access. Code execution is supported.

The opcode and the frame format are fully programmable. Communication can be either in Single Data Rate or Dual Data Rate.

2.10 LCD-TFT controller

The LCD-TFT display controller provides a 24-bit parallel digital RGB (Red, Green, Blue) and delivers all signals to interface directly to a broad range of LCD and TFT panels up to XGA (1024x768) resolution with the following features:

- 2 displays layers with dedicated FIFO (64x32-bit)
- Color Look-Up table (CLUT) up to 256 colors (256x24-bit) per layer
- Up to 8 Input color formats selectable per layer
- Flexible blending between two layers using alpha value (per pixel or constant)
- Flexible programmable parameters for each layer
- Color keying (transparency color)
- Up to 4 programmable interrupt events.

2.11 Chrom-ART Accelerator™ (DMA2D)

The Chrom-Art Accelerator™ (DMA2D) is a graphic accelerator which offers advanced bit blitting, row data copy and pixel format conversion. It supports the following functions:

- Rectangle filling with a fixed color
- Rectangle copy
- Rectangle copy with pixel format conversion
- Rectangle composition with blending and pixel format conversion.

Various image format coding are supported, from indirect 4bpp color mode up to 32bpp direct color. It embeds dedicated memory to store color lookup tables.

An interrupt can be generated when an operation is complete or at a programmed watermark.

All the operations are fully automatized and are running independently from the CPU or the DMAs.

2.12 Nested vectored interrupt controller (NVIC)

The devices embed a nested vectored interrupt controller able to manage 16 priority levels, and handle up to 97 maskable interrupt channels plus the 16 interrupt lines of the Cortex®-M7 with FPU core.

- Closely coupled NVIC gives low-latency interrupt processing
- Interrupt entry vector table address passed directly to the core
- Allows early processing of interrupts
- Processing of late arriving, higher-priority interrupts
- Support tail chaining
- Processor state automatically saved
- Interrupt entry restored on interrupt exit with no instruction overhead

This hardware block provides flexible interrupt management features with minimum interrupt latency.

2.13 External interrupt/event controller (EXTI)

The external interrupt/event controller consists of 24 edge-detector lines used to generate interrupt/event requests. Each line can be independently configured to select the trigger event (rising edge, falling edge, both) and can be masked independently. A pending register maintains the status of the interrupt requests. The EXTI can detect an external line with a pulse width shorter than the Internal APB2 clock period. Up to 168 GPIOs can be connected to the 16 external interrupt lines.

2.14 Clocks and startup

On reset the 16 MHz internal HSI RC oscillator is selected as the default CPU clock. The 16 MHz internal RC oscillator is factory-trimmed to offer 1% accuracy. The application can then select as system clock either the RC oscillator or an external 4-26 MHz clock source. This clock can be monitored for failure. If a failure is detected, the system automatically switches back to the internal RC oscillator and a software interrupt is generated (if enabled). This clock source is input to a PLL thus allowing to increase the frequency up to 216 MHz. Similarly, full interrupt management of the PLL clock entry is available when necessary (for example if an indirectly used external oscillator fails).

Several prescalers allow the configuration of the two AHB buses, the high-speed APB (APB2) and the low-speed APB (APB1) domains. The maximum frequency of the two AHB buses is 216 MHz while the maximum frequency of the high-speed APB domains is 108 MHz. The maximum allowed frequency of the low-speed APB domain is 54 MHz.

The devices embed two dedicated PLL (PLLI2S and PLLSAI) which allow to achieve audio class performance. In this case, the I^2S and SAI master clock can generate all standard sampling frequencies from 8 kHz to 192 kHz.

2.15 Boot modes

At startup, the boot memory space is selected by the BOOT pin and BOOT_ADDx option bytes, allowing to program any boot memory address from 0x0000 0000 to 0x3FFF FFFF which includes:

- All Flash address space mapped on ITCM or AXIM interface
- All RAM address space: ITCM, DTCM RAMs and SRAMs mapped on AXIM interface
- The System memory bootloader

The boot loader is located in system memory. It is used to reprogram the Flash memory through a serial interface.

2.16 Power supply schemes

- V_{BAT} = 1.65 to 3.6 V: power supply for RTC, external clock 32 kHz oscillator and backup registers (through power switch) when V_{DD} is not present.
- V_{DD} = 1.7 to 3.6 Vexternal power supply for I/Os and the internal regulator (when enabled), provided externally through V_{DD} pins.
- V_{SSA}, V_{DDA} = 1.7 to 3.6 V: external analog power supplies for ADC, DAC, reset blocks, RCs and PLL. V_{DDA} and V_{SSA} must be connected to V_{DD} and V_{SS}, respectively.

Note: V_{DD}/V_{DDA} minimum value of 1.7 V is obtained when the internal reset is OFF (refer to Section 2.17.2: Internal reset OFF). Refer to Table 3: Voltage regulator configuration mode versus device operating mode to identify the packages supporting this option.

- V_{DDUSB} can be connected either to V_{DD} or an external independent power supply (3.0 to 3.6V) for USB transceivers (refer to *Figure 4* and *Figure 5*). For example, when device is powered at 1.8V, an independent power supply 3.3V can be connected to V_{DDUSB}. When the V_{DDUSB} is connected to a separated power supply, it is independent from V_{DD} or V_{DDA} but it must be the last supply to be provided and the first to disappear. The following conditions V_{DDUSB} must be respected:
  - During power-on phase ($V_{DD} < V_{DD_MIN}$), V_{DDUSB} should be always lower than V_{DD}
  - During power-down phase ($V_{DD} < V_{DD_MIN}$), V_{DDUSB} should be always lower than V_{DD}
  - V_{DDSUB} rising and falling time rate specifications must be respected (see *Table 20* and *Table 21*)
  - In operating mode phase, V_{DDUSB} could be lower or higher than V_{DD}:

    - If USB (USB OTG_HS/OTG_FS) is used, the associated GPIOs powered by V_{DDUSB} are operating between V_{DDUSB_MIN} and V_{DDUSB_MAX}.

    - The V_{DDUSB} supply both USB transceiver (USB OTG_HS and USB OTG_FS). If only one USB transceiver is used in the application, the GPIOs associated to the other USB transceiver are still supplied by V_{DDUSB}.

    - If USB (USB OTG_HS/OTG_FS) is not used, the associated GPIOs powered by V_{DDUSB} are operating between V_{DD_MIN} and V_{DD_MAX}.

Figure 4. V_{DDUSB} connected to V_{DD} power supply

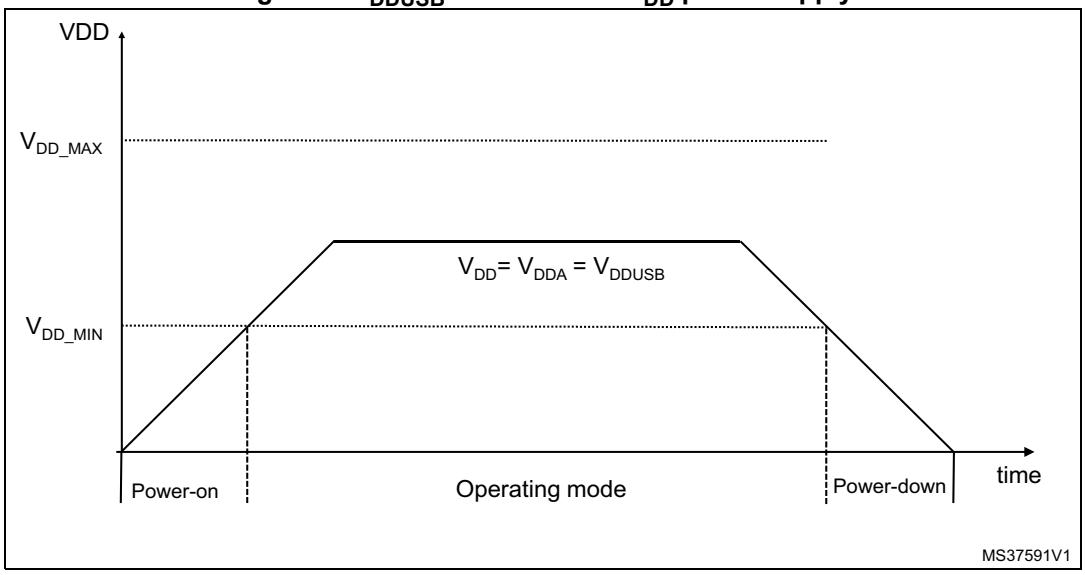

Figure 5. V_{DDUSB} connected to external power supply

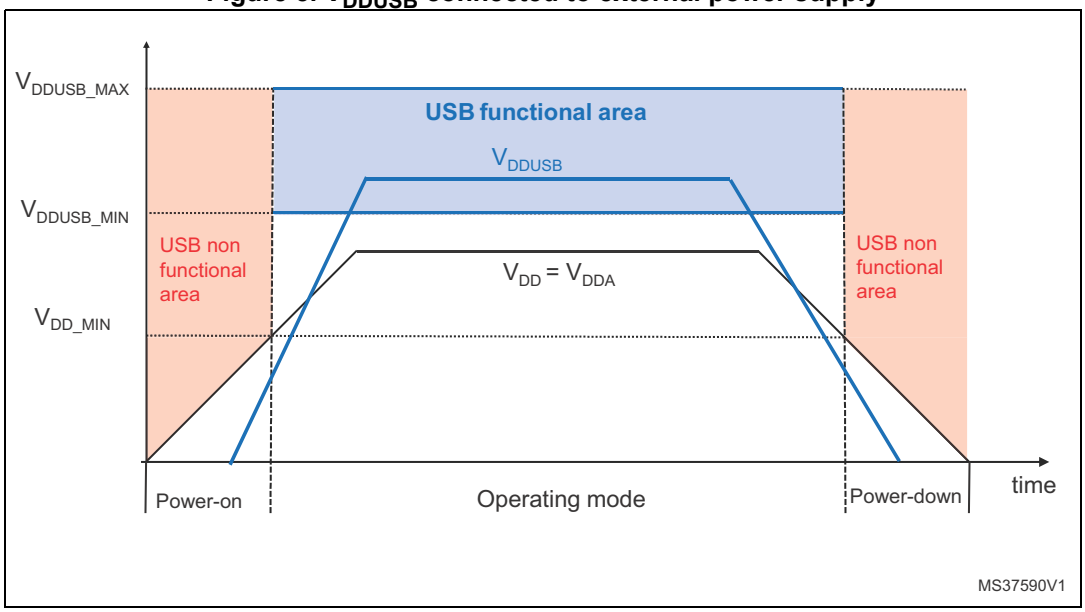

2.17 Power supply supervisor

2.17.1 Internal reset ON

On packages embedding the PDR_ON pin, the power supply supervisor is enabled by holding PDR_ON high. On the other packages, the power supply supervisor is always enabled.

The device has an integrated power-on reset (POR)/ power-down reset (PDR) circuitry coupled with a Brownout reset (BOR) circuitry. At power-on, POR/PDR is always active and ensures proper operation starting from 1.8 V. After the 1.8 V POR threshold level is

reached, the option byte loading process starts, either to confirm or modify default BOR thresholds, or to disable BOR permanently. Three BOR thresholds are available through option bytes. The device remains in reset mode when V_{DD} is below a specified threshold, $V_{POR/PDR}$ or V_{BOR}, without the need for an external reset circuit.

The device also features an embedded programmable voltage detector (PVD) that monitors the V_{DD}/V_{DDA} power supply and compares it to the V_{PVD} threshold. An interrupt can be generated when V_{DD}/V_{DDA} drops below the V_{PVD} threshold and/or when V_{DD}/V_{DDA} is higher than the V_{PVD} threshold. The interrupt service routine can then generate a warning message and/or put the MCU into a safe state. The PVD is enabled by software.

2.17.2 Internal reset OFF

This feature is available only on packages featuring the PDR_ON pin. The internal power-on reset (POR) / power-down reset (PDR) circuitry is disabled through the PDR_ON pin.

An external power supply supervisor should monitor V_{DD} and should maintain the device in reset mode as long as V_{DD} is below a specified threshold. PDR_ON should be connected to V_{SS}. Refer to *Figure 6: Power supply supervisor interconnection with internal reset OFF*.

Figure 6. Power supply supervisor interconnection with internal reset OFF

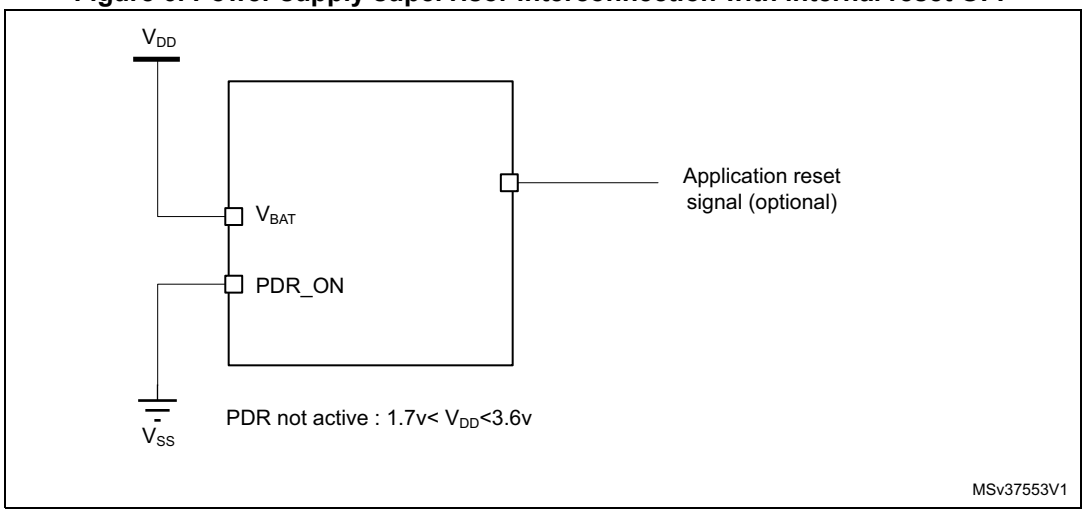

The V_{DD} specified threshold, below which the device must be maintained under reset, is 1.7 V (see *Figure 7*).

A comprehensive set of power-saving mode allows to design low-power applications.

When the internal reset is OFF, the following integrated features are no more supported:

- The integrated power-on reset (POR) / power-down reset (PDR) circuitry is disabled
- The brownout reset (BOR) circuitry must be disabled
- The embedded programmable voltage detector (PVD) is disabled
- V_{BAT} functionality is no more available and V_{BAT} pin should be connected to V_{DD}.

All the packages, except for the LQFP100, allow to disable the internal reset through the PDR_ON signal when connected to V_{SS}.

Figure 7. PDR_ON control with internal reset OFF

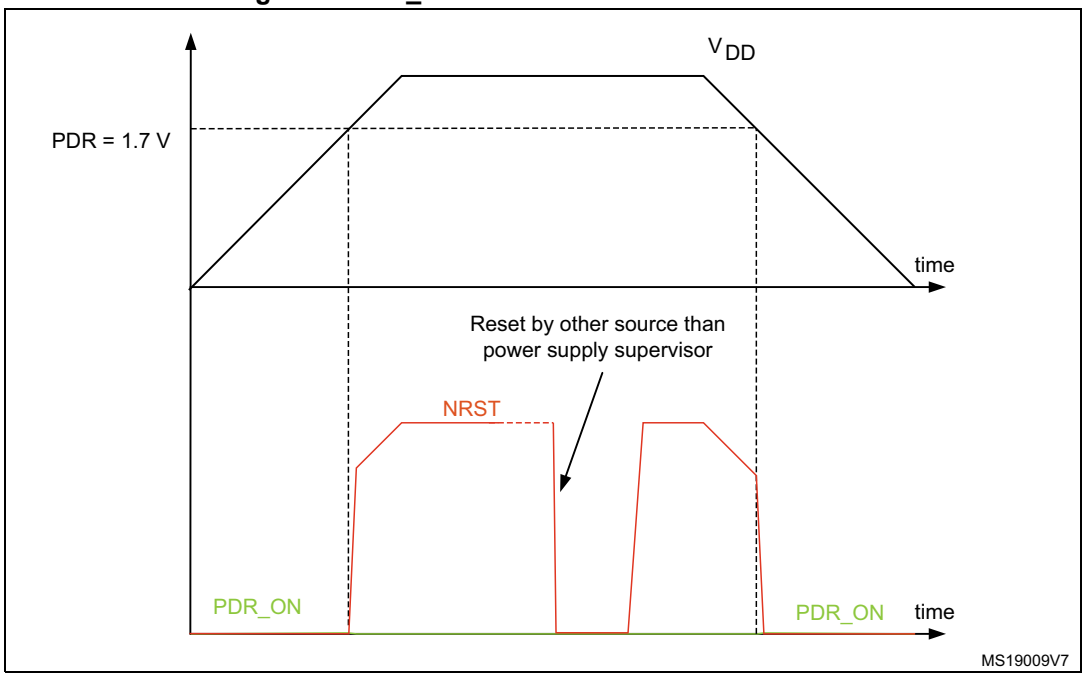

2.18 Voltage regulator

The regulator has four operating modes:

- Regulator ON
  - Main regulator mode (MR)
  - Low-power regulator (LPR)
  - Power-down
- Regulator OFF

2.18.1 Regulator ON

On packages embedding the BYPASS_REG pin, the regulator is enabled by holding BYPASS_REG low. On all other packages, the regulator is always enabled.

There are three power modes configured by software when the regulator is ON:

- MR mode used in Run/sleep modes or in Stop modes
  - In Run/Sleep mode

    The MR mode is used either in the normal mode (default mode) or the over-drive mode (enabled by software). Different voltages scaling are provided to reach the best compromise between the maximum frequency and dynamic power

consumption. The over-drive mode allows operating at a higher frequency than the normal mode for a given voltage scaling.

– In Stop modes

The MR can be configured in two ways during Stop mode:

MR operates in normal mode (default mode of MR in Stop mode)

MR operates in under-drive mode (reduced leakage mode).

- LPR is used in the Stop modes:

  The LP regulator mode is configured by software when entering Stop mode.

  Like the MR mode, the LPR can be configured in two ways during Stop mode:

  – LPR operates in normal mode (default mode when LPR is ON)

  – LPR operates in under-drive mode (reduced leakage mode).

- Power-down is used in Standby mode.

  The Power-down mode is activated only when entering in Standby mode. The regulator output is in high impedance and the kernel circuitry is powered down, inducing zero consumption. The contents of the registers and SRAM are lost.

Refer to *Table 3* for a summary of voltage regulator modes versus device operating modes.

Two external ceramic capacitors should be connected on V_{CAP_1} and V_{CAP_2} pin.

All packages have the regulator ON feature.

Table 3. Voltage regulator configuration mode versus device operating mode(1)

Voltage regulator configuration	Run mode	Sleep mode	Stop mode	Standby mode
Normal mode	MR	MR	MR or LPR	-
Over-drive mode(2)	MR	MR	-	-
Under-drive mode	-	-	MR or LPR	-
Power-down mode	-	-	-	Yes

1. '-' means that the corresponding configuration is not available.
2. The over-drive mode is not available when V_{DD} = 1.7 to 2.1 V.

2.18.2 Regulator OFF

This feature is available only on packages featuring the BYPASS_REG pin. The regulator is disabled by holding BYPASS_REG high. The regulator OFF mode allows to supply externally a V_{12} voltage source through V_{CAP_1} and V_{CAP_2} pins.

Since the internal voltage scaling is not managed internally, the external voltage value must be aligned with the targeted maximum frequency.The two 2.2 µF ceramic capacitors should be replaced by two 100 nF decoupling capacitors.

When the regulator is OFF, there is no more internal monitoring on V_{12}. An external power supply supervisor should be used to monitor the V_{12} of the logic power domain. PA0 pin should be used for this purpose, and act as power-on reset on V_{12} power domain.

In regulator OFF mode, the following features are no more supported:

- PA0 cannot be used as a GPIO pin since it allows to reset a part of the V_{12} logic power domain which is not reset by the NRST pin.
- As long as PA0 is kept low, the debug mode cannot be used under power-on reset. As a consequence, PA0 and NRST pins must be managed separately if the debug connection under reset or pre-reset is required.
- The over-drive and under-drive modes are not available.
- The Standby mode is not available.

Figure 8. Regulator OFF

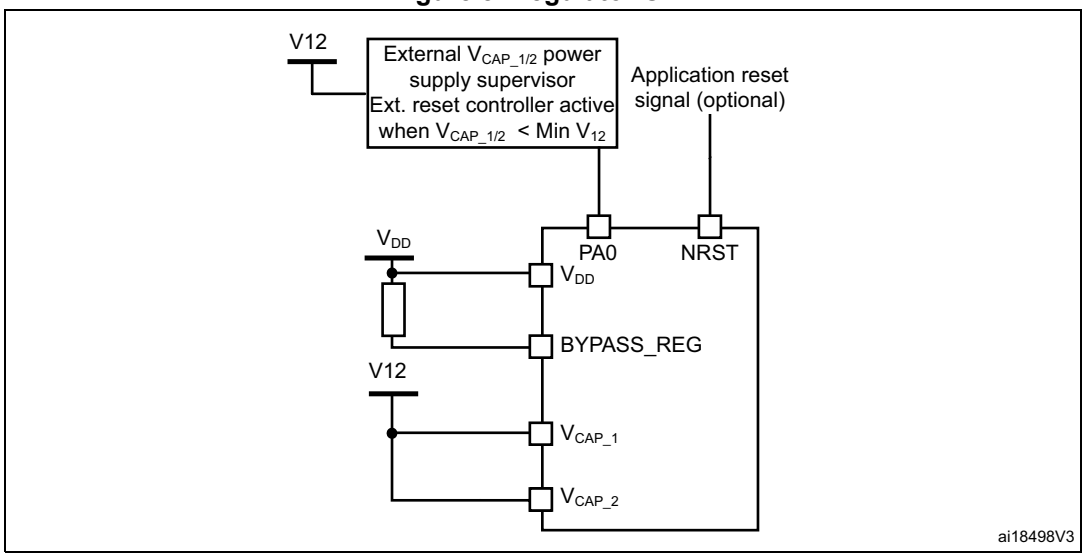

The following conditions must be respected:

- V_{DD} should always be higher than V_{CAP_1} and V_{CAP_2} to avoid current injection between power domains.
- If the time for V_{CAP_1} and V_{CAP_2} to reach V_{12} minimum value is faster than the time for V_{DD} to reach 1.7 V, then PA0 should be kept low to cover both conditions: until V_{CAP_1} and V_{CAP_2} reach V_{12} minimum value and until V_{DD} reaches 1.7 V (see *Figure 9*).
- Otherwise, if the time for V_{CAP_1} and V_{CAP_2} to reach V_{12} minimum value is slower than the time for V_{DD} to reach 1.7 V, then PA0 could be asserted low externally (see *Figure 10*).
- If V_{CAP_1} and V_{CAP_2} go below V_{12} minimum value and V_{DD} is higher than 1.7 V, then a reset must be asserted on PA0 pin.

Note: The minimum value of V_{12} depends on the maximum frequency targeted in the application.

Figure 9. Startup in regulator OFF: slow V_{DD} slope - power-down reset risen after V_{CAP_1}/V_{CAP_2} stabilization

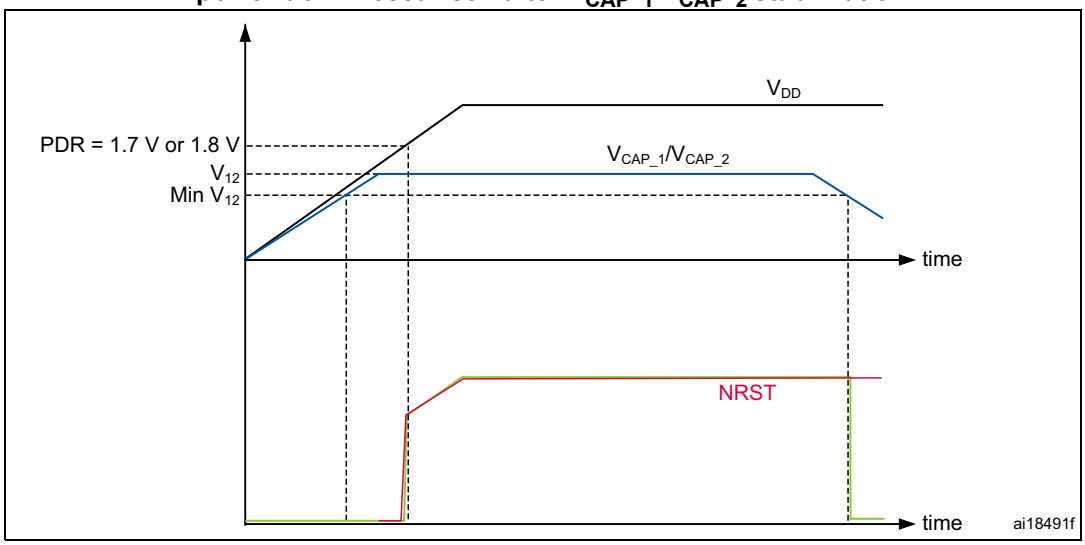

1. This figure is valid whatever the internal reset mode (ON or OFF).

Figure 10. Startup in regulator OFF mode: fast V_{DD} slope - power-down reset risen before V_{CAP_1}/V_{CAP_2} stabilization

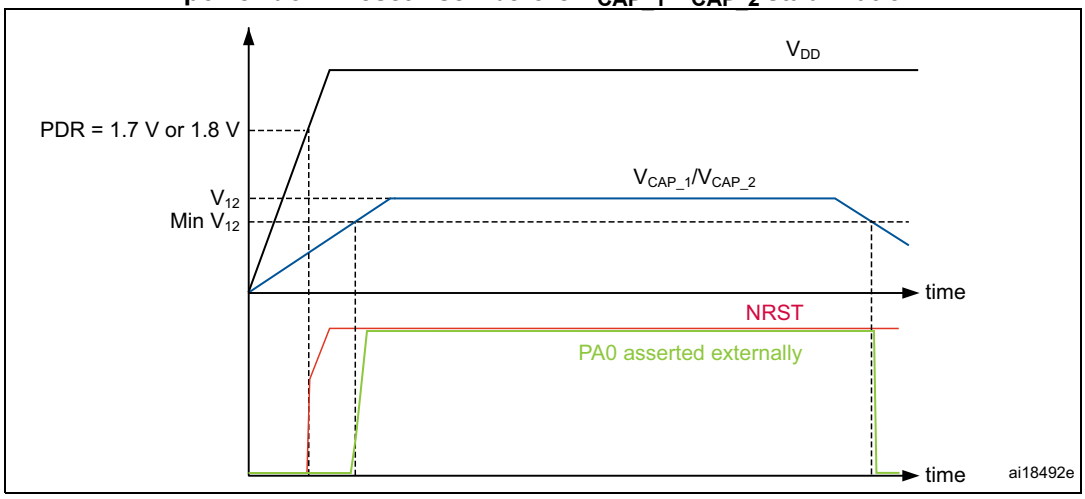

1. This figure is valid whatever the internal reset mode (ON or OFF).

2.18.3 Regulator ON/OFF and internal reset ON/OFF availability

Table 4. Regulator ON/OFF and internal reset ON/OFF availability

Package	Regulator ON	Regulator OFF	Internal reset ON	Internal reset OFF
LQFP100	Yes	No	Yes	No
LQFP144, LQFP208			Yes PDR_ON set to V_{DD}	Yes PDR_ON set to VSS
TFBGA100, LQFP176, WLCSP143, UFBGA176, TFBGA216	Yes BYPASS_REG set to V_{SS}	Yes BYPASS_REG set to V_{DD}		

2.19 Real-time clock (RTC), backup SRAM and backup registers

The RTC is an independent BCD timer/counter. It supports the following features:

- Calendar with subsecond, seconds, minutes, hours (12 or 24 format), week day, date, month, year, in BCD (binary-coded decimal) format.
- Automatic correction for 28, 29 (leap year), 30, and 31 days of the month.
- Two programmable alarms.
- On-the-fly correction from 1 to 32767 RTC clock pulses. This can be used to synchronize it with a master clock.
- Reference clock detection: a more precise second source clock (50 or 60 Hz) can be used to enhance the calendar precision.
- Digital calibration circuit with 0.95 ppm resolution, to compensate for quartz crystal inaccuracy.
- Three anti-tamper detection pins with programmable filter.
- Timestamp feature which can be used to save the calendar content. This function can be triggered by an event on the timestamp pin, or by a tamper event, or by a switch to V_{BAT} mode.
- 17-bit auto-reload wakeup timer (WUT) for periodic events with programmable resolution and period.

The RTC and the 32 backup registers are supplied through a switch that takes power either from the V_{DD} supply when present or from the V_{BAT} pin.

The backup registers are 32-bit registers used to store 128 bytes of user application data when VDD power is not present. They are not reset by a system or power reset, or when the device wakes up from Standby mode.

The RTC clock sources can be:

- A 32.768 kHz external crystal (LSE)
- An external resonator or oscillator(LSE)
- The internal low-power RC oscillator (LSI, with typical frequency of 32 kHz)
- The high-speed external clock (HSE) divided by 32.

The RTC is functional in V_{BAT} mode and in all low-power modes when it is clocked by the LSE. When clocked by the LSI, the RTC is not functional in V_{BAT} mode, but is functional in all low-power modes.

All RTC events (Alarm, WakeUp Timer, Timestamp or Tamper) can generate an interrupt and wakeup the device from the low-power modes.

2.20 Low-power modes

The devices support three low-power modes to achieve the best compromise between low-power consumption, short startup time and available wakeup sources:

- **Sleep mode**

  In Sleep mode, only the CPU is stopped. All peripherals continue to operate and can wake up the CPU when an interrupt/event occurs.

- **Stop mode**

  The Stop mode achieves the lowest power consumption while retaining the contents of SRAM and registers. All clocks in the 1.2 V domain are stopped, the PLL, the HSI RC and the HSE crystal oscillators are disabled.

  The voltage regulator can be put either in main regulator mode (MR) or in low-power mode (LPR). Both modes can be configured as follows (see *Table 5: Voltage regulator modes in Stop mode*):

  – Normal mode (default mode when MR or LPR is enabled)

  – Under-drive mode.

  The device can be woken up from the Stop mode by any of the EXTI line (the EXTI line source can be one of the 16 external lines, the PVD output, the RTC alarm / wakeup / tamper / time stamp events, the USB OTG FS/HS wakeup or the Ethernet wakeup and LPTIM1 asynchronous interrupt).

Table 5. Voltage regulator modes in Stop mode

Voltage regulator configuration	Main regulator (MR)	Low-power regulator (LPR)
Normal mode	MR ON	LPR ON
Under-drive mode	MR in under-drive mode	LPR in under-drive mode

- **Standby mode**

  The Standby mode is used to achieve the lowest power consumption. The internal voltage regulator is switched off so that the entire 1.2 V domain is powered off. The PLL, the HSI RC and the HSE crystal oscillators are also switched off. After entering Standby mode, the SRAM and register contents are lost except for registers in the backup domain and the backup SRAM when selected.

  The device exits the Standby mode when an external reset (NRST pin), an IWDG reset, a rising or falling edge on one of the 6 WKUP pins (PA0, PA2, PC1, PC13, PI8, PI11), or an RTC alarm / wakeup / tamper /time stamp event occurs.

  The Standby mode is not supported when the embedded voltage regulator is bypassed and the 1.2 V domain is controlled by an external power.

2.21 V_{BAT} operation

The V_{BAT} pin allows to power the device V_{BAT} domain from an external battery, an external supercapacitor, or from V_{DD} when no external battery and an external supercapacitor are present.

V_{BAT} operation is activated when V_{DD} is not present.

The V_{BAT} pin supplies the RTC, the backup registers and the backup SRAM.

Note: When the microcontroller is supplied from V_{BAT}, external interrupts and RTC alarm/events do not exit it from V_{BAT} operation.

When PDR_ON pin is connected to V_{SS} (Internal Reset OFF), the V_{BAT} functionality is no more available and V_{BAT} pin should be connected to V_{DD}.

2.22 Timers and watchdogs

The devices include two advanced-control timers, eight general-purpose timers, two basic timers and two watchdog timers.

All timer counters can be frozen in debug mode.

Table 6 compares the features of the advanced-control, general-purpose and basic timers.

Table 6. Timer feature comparison

Timer type	Timer	Counter resolution	Counter type	Prescaler factor	DMA request generation	Capture/ compare channels	Complementary output	Max interface clock (MHz)	Max timer clock (MHz)(1)
Advanced-control	TIM1, TIM8	16-bit	Up, Down, Up/down	Any integer between 1 and 65536	Yes	4	Yes	108	216
General purpose	TIM2, TIM5	32-bit	Up, Down, Up/down	Any integer between 1 and 65536	Yes	4	No	54	108/216
	TIM3, TIM4	16-bit	Up, Down, Up/down	Any integer between 1 and 65536	Yes	4	No	54	108/216
	TIM9	16-bit	Up	Any integer between 1 and 65536	No	2	No	108	216
	TIM10, TIM11	16-bit	Up	Any integer between 1 and 65536	No	1	No	108	216
	TIM12	16-bit	Up	Any integer between 1 and 65536	No	2	No	54	108/216
	TIM13, TIM14	16-bit	Up	Any integer between 1 and 65536	No	1	No	54	108/216
Basic	TIM6, TIM7	16-bit	Up	Any integer between 1 and 65536	Yes	0	No	54	108/216

1. The maximum timer clock is either 108 or 216 MHz depending on TIMPRE bit configuration in the RCC_DCKCFGR register.

2.22.1 Advanced-control timers (TIM1, TIM8)

The advanced-control timers (TIM1, TIM8) can be seen as three-phase PWM generators multiplexed on 6 channels. They have complementary PWM outputs with programmable inserted dead times. They can also be considered as complete general-purpose timers. Their 4 independent channels can be used for:

- Input capture
- Output compare
- PWM generation (edge- or center-aligned modes)
- One-pulse mode output

If configured as standard 16-bit timers, they have the same features as the general-purpose TIMx timers. If configured as 16-bit PWM generators, they have full modulation capability (0-100%).

The advanced-control timer can work together with the TIMx timers via the Timer Link feature for synchronization or event chaining.

TIM1 and TIM8 support independent DMA request generation.

2.22.2 General-purpose timers (TIMx)

There are ten synchronizable general-purpose timers embedded in the STM32F756xx devices (see *Table 6* for differences).

- **TIM2, TIM3, TIM4, TIM5**

  The STM32F756xx include 4 full-featured general-purpose timers: TIM2, TIM5, TIM3, and TIM4.The TIM2 and TIM5 timers are based on a 32-bit auto-reload up/downcounter and a 16-bit prescaler. The TIM3 and TIM4 timers are based on a 16-bit auto-reload up/downcounter and a 16-bit prescaler. They all feature 4 independent channels for input capture/output compare, PWM or one-pulse mode output. This gives up to 16 input capture/output compare/PWMs on the largest packages.

  The TIM2, TIM3, TIM4, TIM5 general-purpose timers can work together, or with the other general-purpose timers and the advanced-control timers TIM1 and TIM8 via the Timer Link feature for synchronization or event chaining.

  Any of these general-purpose timers can be used to generate PWM outputs.

  TIM2, TIM3, TIM4, TIM5 all have independent DMA request generation. They are capable of handling quadrature (incremental) encoder signals and the digital outputs from 1 to 4 hall-effect sensors.

- **TIM9, TIM10, TIM11, TIM12, TIM13, and TIM14**

  These timers are based on a 16-bit auto-reload upcounter and a 16-bit prescaler. TIM10, TIM11, TIM13, and TIM14 feature one independent channel, whereas TIM9 and TIM12 have two independent channels for input capture/output compare, PWM or one-pulse mode output. They can be synchronized with the TIM2, TIM3, TIM4, TIM5 full-featured general-purpose timers. They can also be used as simple time bases.

2.22.3 Basic timers TIM6 and TIM7

These timers are mainly used for DAC trigger and waveform generation. They can also be used as a generic 16-bit time base.

TIM6 and TIM7 support independent DMA request generation.

2.22.4 Low-power timer (LPTIM1)

The low-power timer has an independent clock and is running also in Stop mode if it is clocked by LSE, LSI or an external clock. It is able to wakeup the devices from Stop mode.

This low-power timer supports the following features:

- 16-bit up counter with 16-bit autoreload register
- 16-bit compare register
- Configurable output: pulse, PWM
- Continuous / one-shot mode
- Selectable software / hardware input trigger
- Selectable clock source:
- Internal clock source: LSE, LSI, HSI or APB clock
- External clock source over LPTIM input (working even with no internal clock source running, used by the Pulse Counter Application)
- Programmable digital glitch filter
- Encoder mode

2.22.5 Independent watchdog

The independent watchdog is based on a 12-bit downcounter and 8-bit prescaler. It is clocked from an independent 32 kHz internal RC and as it operates independently from the main clock, it can operate in Stop and Standby modes. It can be used either as a watchdog to reset the device when a problem occurs, or as a free-running timer for application timeout management. It is hardware- or software-configurable through the option bytes.

2.22.6 Window watchdog

The window watchdog is based on a 7-bit downcounter that can be set as free-running. It can be used as a watchdog to reset the device when a problem occurs. It is clocked from the main clock. It has an early warning interrupt capability and the counter can be frozen in debug mode.

2.22.7 SysTick timer

This timer is dedicated to real-time operating systems, but could also be used as a standard downcounter. It features:

- A 24-bit downcounter
- Autoreload capability
- Maskable system interrupt generation when the counter reaches 0
- Programmable clock source.

2.23 Inter-integrated circuit interface (I^2C)

The device embeds 4 I2C. Refer to *Table 7: I2C implementation* for the features implementation.

The I^2C bus interface handles communication between the microcontroller and the serial I^2C bus. It controls all I^2C bus-specific sequencing, protocol, arbitration and timing.

The I2C peripheral supports:

- I^2C-bus specification and user manual rev. 5 compatibility:
  - Slave and master modes, multimaster capability
  - Standard-mode (Sm), with a bitrate up to 100 kbit/s
  - Fast-mode (Fm), with a bitrate up to 400 kbit/s
  - 7-bit and 10-bit addressing mode, multiple 7-bit slave addresses
  - Programmable setup and hold times
  - Optional clock stretching
- System Management Bus (SMBus) specification rev 2.0 compatibility:
  - Hardware PEC (Packet Error Checking) generation and verification with ACK control
  - Address resolution protocol (ARP) support
  - SMBus alert
- Power System Management Protocol (PMBus™) specification rev 1.1 compatibility
- Independent clock: a choice of independent clock sources allowing the I2C communication speed to be independent from the PCLK reprogramming.
- Programmable analog and digital noise filters
- 1-byte buffer with DMA capability

Table 7. I2C implementation

I2C features[1]	I2C1	I2C2	I2C3	I2C4
Standard-mode (up to 100 kbit/s)	X	X	X	X
Fast-mode (up to 400 kbit/s)	X	X	X	X
Programmable analog and digital noise filters	X	X	X	X
SMBus/PMBus hardware support	X	X	X	X
Independent clock	X	X	X	X

1. X: supported

2.24 Universal synchronous/asynchronous receiver transmitters (USART)

The device embeds USART. Refer to *Table 8: USART implementation* for the features implementation.

The universal synchronous asynchronous receiver transmitter (USART) offers a flexible means of full-duplex data exchange with external equipment requiring an industry standard NRZ asynchronous serial data format.

The USART peripheral supports:

- Full-duplex asynchronous communications
- Configurable oversampling method by 16 or 8 to give flexibility between speed and clock tolerance
- Dual clock domain allowing convenient baud rate programming independent from the PCLK reprogramming
- A common programmable transmit and receive baud rate of up to 27 Mbit/s when USART clock source is system clock frequency (Max is 216 MHz) and oversampling by 8 is used.
- Auto baud rate detection
- Programmable data word length (7 or 8 or 9 bits) word length
- Programmable data order with MSB-first or LSB-first shifting
- Programmable parity (odd, even, no parity)
- Configurable stop bits (1 or 1.5 or 2 stop bits)
- Synchronous mode and clock output for synchronous communications
- Single-wire half-duplex communications
- Separate signal polarity control for transmission and reception
- Swappable Tx/Rx pin configuration
- Hardware flow control for modem and RS-485 transceiver
- Multiprocessor communications
- LIN master synchronous break send capability and LIN slave break detection capability
- IrDA SIR encoder decoder supporting 3/16 bit duration for normal mode
- Smartcard mode (T=0 and T=1 asynchronous protocols for Smartcards as defined in the ISO/IEC 7816-3 standard)
- Support for Modbus communication

The table below summarizes the implementation of all U(S)ARTs instances

Table 8. USART implementation

features[1]	USART1/2/3/6	UART4/5/7/8
Data Length	7, 8 and 9 bits	
Hardware flow control for modem	X	X
Continuous communication using DMA	X	X
Multiprocessor communication	X	X
Synchronous mode	X	-

Table 8. USART implementation (continued)

features[1]	USART1/2/3/6	UART4/5/7/8
Smartcard mode	X	-
Single-wire half-duplex communication	X	X
IrDA SIR ENDEC block	X	X
LIN mode	X	X
Dual clock domain	X	X
Receiver timeout interrupt	X	X
Modbus communication	X	X
Auto baud rate detection	X	X
Driver Enable	X	X

1. X: supported.

2.25 Serial peripheral interface (SPI)/inter- integrated sound interfaces (I2S)

The devices feature up to six SPIs in slave and master modes in full-duplex and simplex communication modes. SPI1, SPI4, SPI5, and SPI6 can communicate at up to 50 Mbits/s, SPI2 and SPI3 can communicate at up to 25 Mbit/s. The 3-bit prescaler gives 8 master mode frequencies and the frame is configurable from 4 to 16 bits. The SPI interfaces support NSS pulse mode, TI mode and Hardware CRC calculation. All SPIs can be served by the DMA controller.

Three standard I^2S interfaces (multiplexed with SPI1, SPI2 and SPI3) are available. They can be operated in master or slave mode, in simplex communication modes, and can be configured to operate with a 16-/32-bit resolution as an input or output channel. Audio sampling frequencies from 8 kHz up to 192 kHz are supported. When either or both of the I^2S interfaces is/are configured in master mode, the master clock can be output to the external DAC/CODEC at 256 times the sampling frequency.

All I2Sx can be served by the DMA controller.

2.26 Serial audio interface (SAI)

The devices embed two serial audio interfaces.

The serial audio interface is based on two independent audio subblocks which can operate as transmitter or receiver with their FIFO. Many audio protocols are supported by each block: I2S standards, LSB or MSB-justified, PCM/DSP, TDM, AC’97 and SPDIF output, supporting audio sampling frequencies from 8 kHz up to 192 kHz. Both subblocks can be configured in master or in slave mode.

In master mode, the master clock can be output to the external DAC/CODEC at 256 times of the sampling frequency.

The two sub-blocks can be configured in synchronous mode when full-duplex mode is required.

SAI1 and SAI2 can be served by the DMA controller

2.27 SPDIFRX Receiver Interface (SPDIFRX)

The SPDIFRX peripheral, is designed to receive an S/PDIF flow compliant with IEC-60958 and IEC-61937. These standards support simple stereo streams up to high sample rate, and compressed multi-channel surround sound, such as those defined by Dolby or DTS (up to 5.1).

The main features of the SPDIFRX are the following:

- Up to 4 inputs available
- Automatic symbol rate detection
- Maximum symbol rate: 12.288 MHz
- Stereo stream from 32 to 192 kHz supported
- Supports Audio IEC-60958 and IEC-61937, consumer applications
- Parity bit management
- Communication using DMA for audio samples
- Communication using DMA for control and user channel information
- Interrupt capabilities

The SPDIFRX receiver provides all the necessary features to detect the symbol rate, and decode the incoming data stream. The user can select the wanted SPDIF input, and when a valid signal will be available, the SPDIFRX will re-sample the incoming signal, decode the manchester stream, recognize frames, sub-frames and blocks elements. It delivers to the CPU decoded data, and associated status flags.

The SPDIFRX also offers a signal named spdif_frame_sync, which toggles at the S/PDIF sub-frame rate that will be used to compute the exact sample rate for clock drift algorithms.

2.28 Audio PLL (PLLI2S)

The devices feature an additional dedicated PLL for audio I^2S and SAI applications. It allows to achieve error-free I^2S sampling clock accuracy without compromising on the CPU performance, while using USB peripherals.

The PLLI2S configuration can be modified to manage an I^2S/SAI sample rate change without disabling the main PLL (PLL) used for CPU, USB and Ethernet interfaces.

The audio PLL can be programmed with very low error to obtain sampling rates ranging from 8 KHz to 192 KHz.

In addition to the audio PLL, a master clock input pin can be used to synchronize the I^2S/SAI flow with an external PLL (or Codec output).

2.29 Audio and LCD PLL(PLLSAI)

An additional PLL dedicated to audio and LCD-TFT is used for SAI1 peripheral in case the PLLI2S is programmed to achieve another audio sampling frequency (49.152 MHz or 11.2896 MHz) and the audio application requires both sampling frequencies simultaneously.

The PLLSAI is also used to generate the LCD-TFT clock.

2.30 SD/SDIO/MMC card host interface (SDMMC)

An SDMMC host interface is available, that supports MultiMediaCard System Specification Version 4.2 in three different databus modes: 1-bit (default), 4-bit and 8-bit.

The interface allows data transfer at up to 50 MHz, and is compliant with the SD Memory card specification version 2.0.

The SDMMC card specification version 2.0 is also supported with two different databus modes: 1-bit (default) and 4-bit.

The current version supports only one SD/SDMMC/MMC4.2 card at any one time and a stack of MMC4.1 or previous.

The SDMMC can be served by the DMA controller

2.31 Ethernet MAC interface with dedicated DMA and IEEE 1588 support

The devices provide an IEEE-802.3-2002-compliant media access controller (MAC) for ethernet LAN communications through an industry-standard medium-independent interface (MII) or a reduced medium-independent interface (RMII). The microcontroller requires an external physical interface device (PHY) to connect to the physical LAN bus (twisted-pair, fiber, etc.). The PHY is connected to the device MII port using 17 signals for MII or 9 signals for RMII, and can be clocked using the 25 MHz (MII) from the microcontroller.

The devices include the following features:

- Support of 10 and 100 Mbit/s rates
- Dedicated DMA controller allowing high-speed transfers between the dedicated SRAM and the descriptors
- Tagged MAC frame support (VLAN support)
- Half-duplex (CSMA/CD) and full-duplex operation
- MAC control sublayer (control frames) support
- 32-bit CRC generation and removal
- Several address filtering modes for physical and multicast address (multicast and group addresses)
- 32-bit status code for each transmitted or received frame
- Internal FIFOs to buffer transmit and receive frames. The transmit FIFO and the receive FIFO are both 2 Kbytes.
- Supports hardware PTP (precision time protocol) in accordance with IEEE 1588 2008 (PTP V2) with the time stamp comparator connected to the TIM2 input
- Triggers interrupt when system time becomes greater than target time

2.32 Controller area network (bxCAN)

The two CANs are compliant with the 2.0A and B (active) specifications with a bitrate up to 1 Mbit/s. They can receive and transmit standard frames with 11-bit identifiers as well as extended frames with 29-bit identifiers. Each CAN has three transmit mailboxes, two receive FIFOS with 3 stages and 28 shared scalable filter banks (all of them can be used even if one CAN is used). 256 bytes of SRAM are allocated for each CAN.

2.33 Universal serial bus on-the-go full-speed (OTG_FS)

The device embeds an USB OTG full-speed device/host/OTG peripheral with integrated transceivers. The USB OTG FS peripheral is compliant with the USB 2.0 specification and with the OTG 2.0 specification. It has software-configurable endpoint setting and supports suspend/resume. The USB OTG controller requires a dedicated 48 MHz clock that is generated by a PLL connected to the HSE oscillator.

The major features are:

- Combined Rx and Tx FIFO size of 1.28 Kbytes with dynamic FIFO sizing
- Support of the session request protocol (SRP) and host negotiation protocol (HNP)
- 1 bidirectional control endpoint + 5 IN endpoints + 5 OUT endpoints
- 12 host channels with periodic OUT support
- Software configurable to OTG1.3 and OTG2.0 modes of operation
- USB 2.0 LPM (Link Power Management) support
- Internal FS OTG PHY support
- HNP/SNP/IP inside (no need for any external resistor)

For OTG/Host modes, a power switch is needed in case bus-powered devices are connected

2.34 Universal serial bus on-the-go high-speed (OTG_HS)

The device embeds a USB OTG high-speed (up to 480 Mb/s) device/host/OTG peripheral. The USB OTG HS supports both full-speed and high-speed operations. It integrates the transceivers for full-speed operation (12 MB/s) and features a UTMI low-pin interface (ULPI) for high-speed operation (480 MB/s). When using the USB OTG HS in HS mode, an external PHY device connected to the ULPI is required.

The USB OTG HS peripheral is compliant with the USB 2.0 specification and with the OTG 2.0 specification. It has software-configurable endpoint setting and supports suspend/resume. The USB OTG controller requires a dedicated 48 MHz clock that is generated by a PLL connected to the HSE oscillator.

The major features are:

- Combined Rx and Tx FIFO size of 4 Kbytes with dynamic FIFO sizing
- Support of the session request protocol (SRP) and host negotiation protocol (HNP)
- 8 bidirectional endpoints
- 16 host channels with periodic OUT support
- Software configurable to OTG1.3 and OTG2.0 modes of operation
- USB 2.0 LPM (Link Power Management) support
- Internal FS OTG PHY support
- External HS or HS OTG operation supporting ULPI in SDR mode. The OTG PHY is connected to the microcontroller ULPI port through 12 signals. It can be clocked using the 60 MHz output.
- Internal USB DMA
- HNP/SNP/IP inside (no need for any external resistor)
- for OTG/Host modes, a power switch is needed in case bus-powered devices are connected

2.35 High-definition multimedia interface (HDMI) - consumer electronics control (CEC)

The device embeds a HDMI-CEC controller that provides hardware support for the Consumer Electronics Control (CEC) protocol (Supplement 1 to the HDMI standard).

This protocol provides high-level control functions between all audiovisual products in an environment. It is specified to operate at low speeds with minimum processing and memory overhead. It has a clock domain independent from the CPU clock, allowing the HDMI-CEC controller to wakeup the MCU from Stop mode on data reception.

2.36 Digital camera interface (DCMI)

The devices embed a camera interface that can connect with camera modules and CMOS sensors through an 8-bit to 14-bit parallel interface, to receive video data. The camera interface can sustain a data transfer rate up to 54 Mbyte/s at 54 MHz. It features:

- Programmable polarity for the input pixel clock and synchronization signals
- Parallel data communication can be 8-, 10-, 12- or 14-bit
- Supports 8-bit progressive video monochrome or raw bayer format, YCbCr 4:2:2 progressive video, RGB 565 progressive video or compressed data (like JPEG)
- Supports continuous mode or snapshot (a single frame) mode
- Capability to automatically crop the image

2.37 Cryptographic acceleration

The devices embed a cryptographic accelerator. This cryptographic accelerator provides a set of hardware acceleration for the advanced cryptographic algorithms usually needed to

provide confidentiality, authentication, data integrity and non repudiation when exchanging messages with a peer.

- These algorithms consists of:

  Encryption/Decryption

  – DES/TDES (data encryption standard/triple data encryption standard): ECB (electronic codebook) and CBC (cipher block chaining) chaining algorithms, 64-, 128- or 192-bit key

  – AES (advanced encryption standard): ECB, CBC, GCM, CCM, and CTR (counter mode) chaining algorithms, 128, 192 or 256-bit key

  Universal hash

  – SHA-1 and SHA-2 (secure hash algorithms)

  – MD5

  – HMAC

The cryptographic accelerator supports DMA request generation.

2.38 Random number generator (RNG)

All devices embed an RNG that delivers 32-bit random numbers generated by an integrated analog circuit.

2.39 General-purpose input/outputs (GPIOs)

Each of the GPIO pins can be configured by software as output (push-pull or open-drain, with or without pull-up or pull-down), as input (floating, with or without pull-up or pull-down) or as peripheral alternate function. Most of the GPIO pins are shared with digital or analog alternate functions. All GPIOs are high-current-capable and have speed selection to better manage internal noise, power consumption and electromagnetic emission.

The I/O configuration can be locked if needed by following a specific sequence in order to avoid spurious writing to the I/Os registers.

Fast I/O handling allowing maximum I/O toggling up to 108 MHz.

2.40 Analog-to-digital converters (ADCs)

Three 12-bit analog-to-digital converters are embedded and each ADC shares up to 16 external channels, performing conversions in the single-shot or scan mode. In scan mode, automatic conversion is performed on a selected group of analog inputs.

Additional logic functions embedded in the ADC interface allow:

- Simultaneous sample and hold
- Interleaved sample and hold

The ADC can be served by the DMA controller. An analog watchdog feature allows very precise monitoring of the converted voltage of one, some or all selected channels. An interrupt is generated when the converted voltage is outside the programmed thresholds.

To synchronize A/D conversion and timers, the ADCs could be triggered by any of TIM1, TIM2, TIM3, TIM4, TIM5, or TIM8 timer.

2.41 Temperature sensor

The temperature sensor has to generate a voltage that varies linearly with temperature. The conversion range is between 1.7 V and 3.6 V. The temperature sensor is internally connected to the same input channel as V_{BAT}, ADC1_IN18, which is used to convert the sensor output voltage into a digital value. When the temperature sensor and V_{BAT} conversion are enabled at the same time, only V_{BAT} conversion is performed.

As the offset of the temperature sensor varies from chip to chip due to process variation, the internal temperature sensor is mainly suitable for applications that detect temperature changes instead of absolute temperatures. If an accurate temperature reading is needed, then an external temperature sensor part should be used.

2.42 Digital-to-analog converter (DAC)

The two 12-bit buffered DAC channels can be used to convert two digital signals into two analog voltage signal outputs.

This dual digital Interface supports the following features:

- two DAC converters: one for each output channel
- 8-bit or 12-bit monotonic output
- left or right data alignment in 12-bit mode
- synchronized update capability
- noise-wave generation
- triangular-wave generation
- dual DAC channel independent or simultaneous conversions
- DMA capability for each channel
- external triggers for conversion
- input voltage reference V_{REF+}

Eight DAC trigger inputs are used in the device. The DAC channels are triggered through the timer update outputs that are also connected to different DMA streams.

2.43 Serial wire JTAG debug port (SWJ-DP)

The ARM SWJ-DP interface is embedded, and is a combined JTAG and serial wire debug port that enables either a serial wire debug or a JTAG probe to be connected to the target.

Debug is performed using 2 pins only instead of 5 required by the JTAG (JTAG pins could be re-use as GPIO with alternate function): the JTAG TMS and TCK pins are shared with SWDIO and SWCLK, respectively, and a specific sequence on the TMS pin is used to switch between JTAG-DP and SW-DP.

2.44 Embedded Trace Macrocell™

The ARM Embedded Trace Macrocell provides a greater visibility of the instruction and data flow inside the CPU core by streaming compressed data at a very high rate from the STM32F756xx through a small number of ETM pins to an external hardware trace port analyzer (TPA) device. The TPA is connected to a host computer using USB, Ethernet, or any other high-speed channel. Real-time instruction and data flow activity can be recorded and then formatted for display on the host computer that runs the debugger software. TPA hardware is commercially available from common development tool vendors.

The Embedded Trace Macrocell operates with third party debugger software tools.

3 Pinouts and pin description

Figure 11. STM32F756Vx LQFP100 pinout

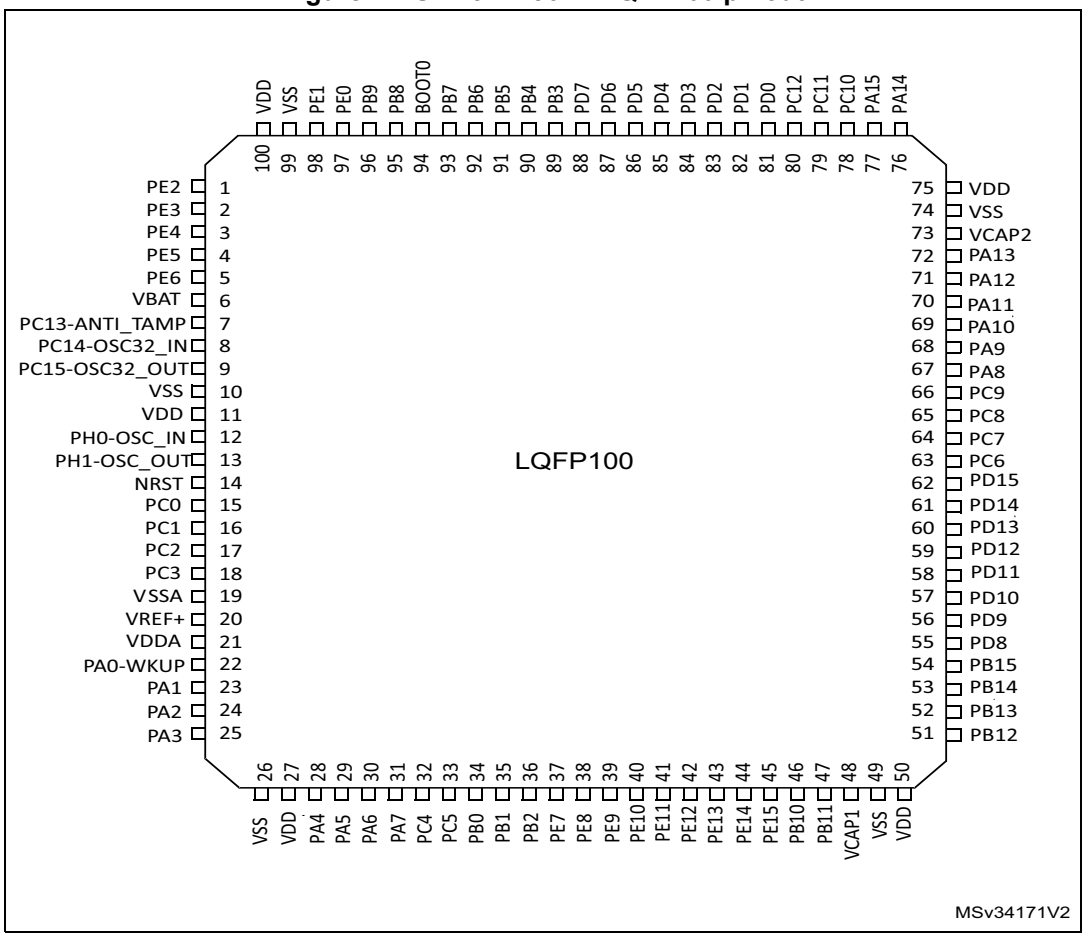

2. The above figure shows the package top view.

Figure 12. STM32F756Vx TFBGA100 ballout

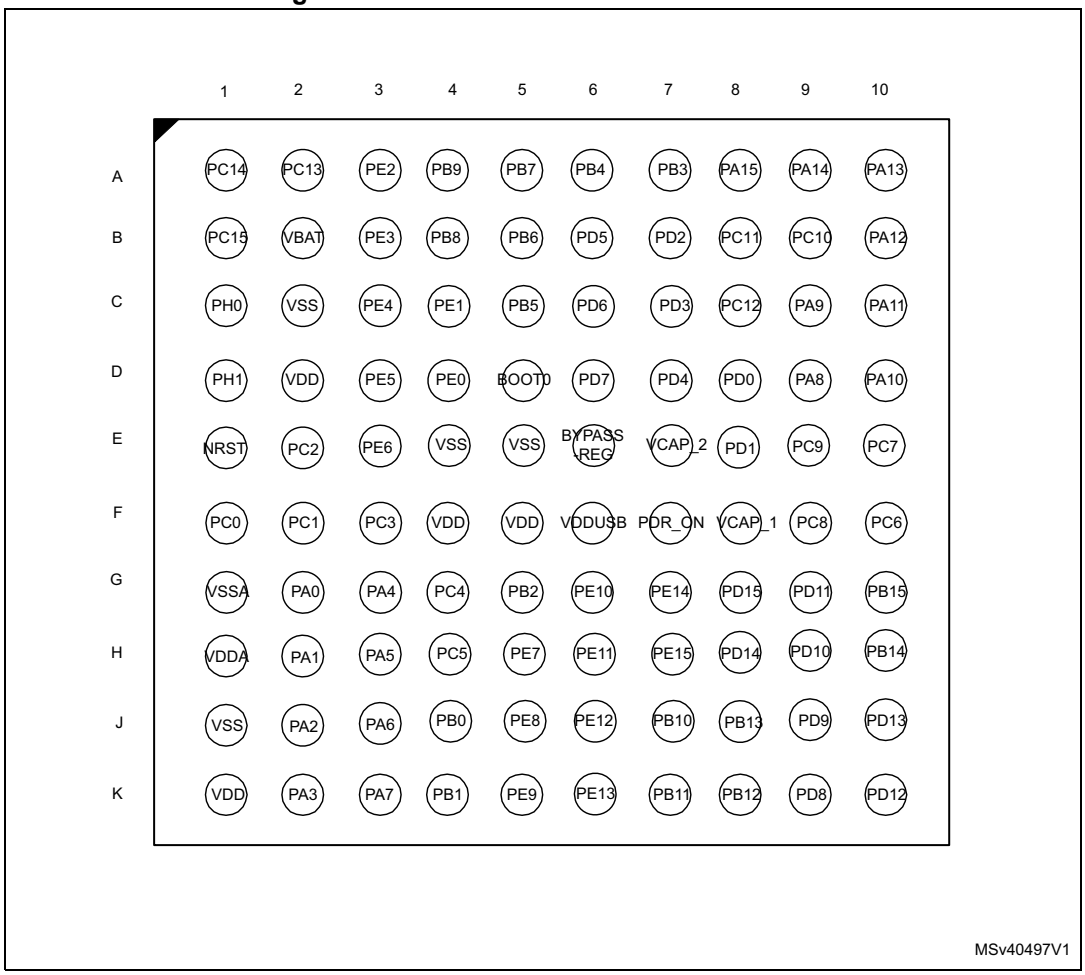

1. The above figure shows the package top view.

Figure 13. STM32F756Zx WLCSP143 ballout

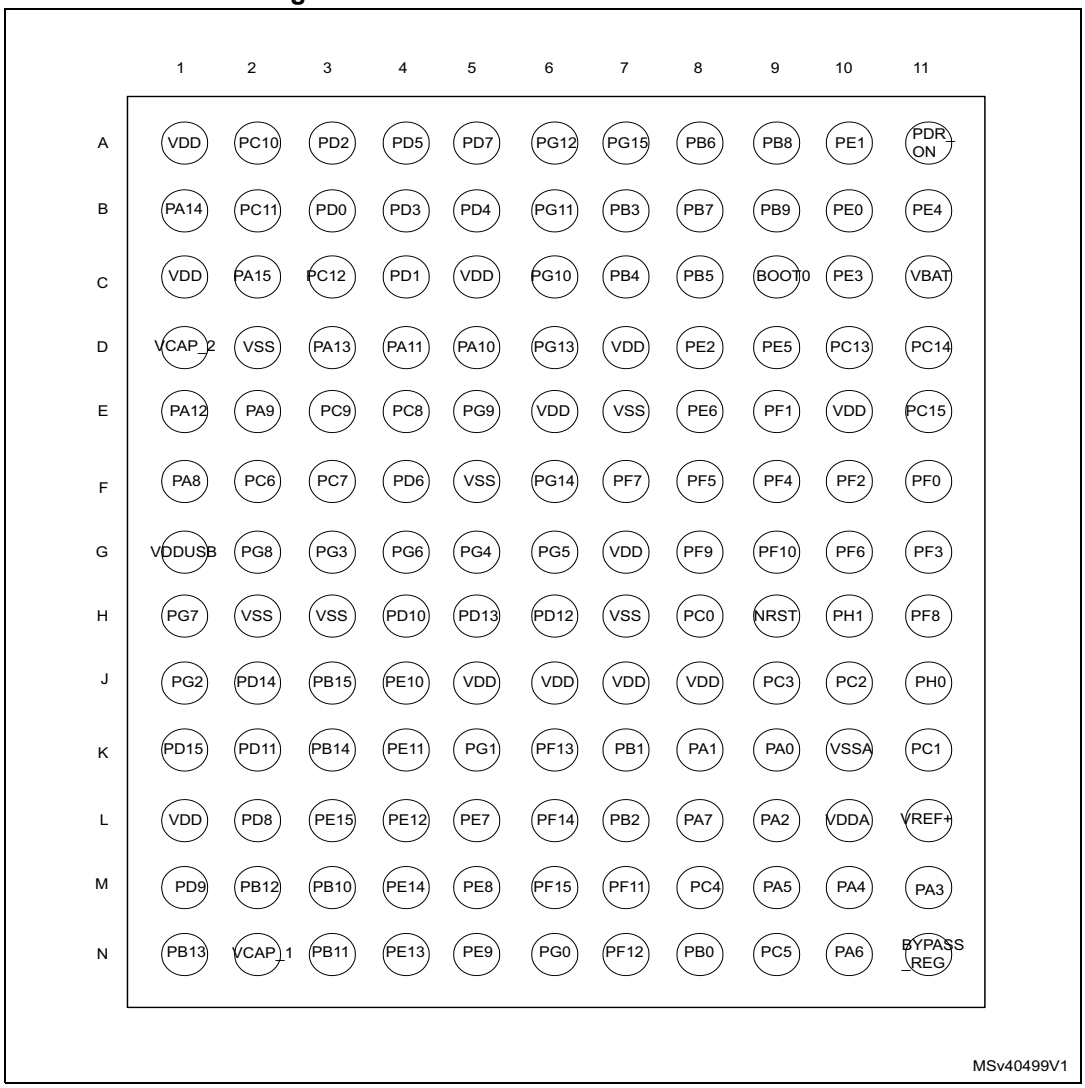

1. The above figure shows the package top view.

Figure 14. STM32F756Zx LQFP144 pinout

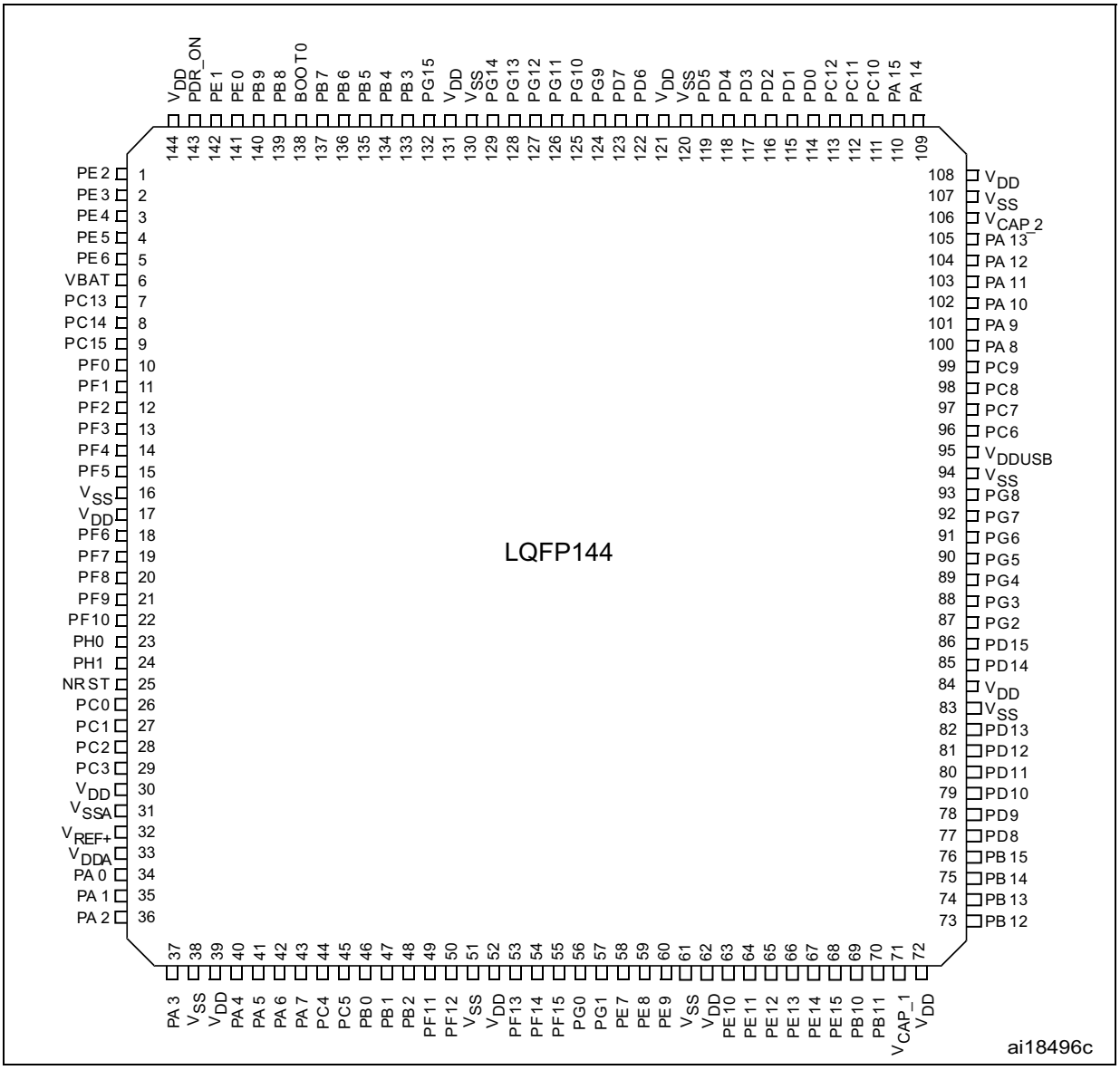

1. The above figure shows the package top view.

Figure 15. STM32F756Ix LQFP176 pinout

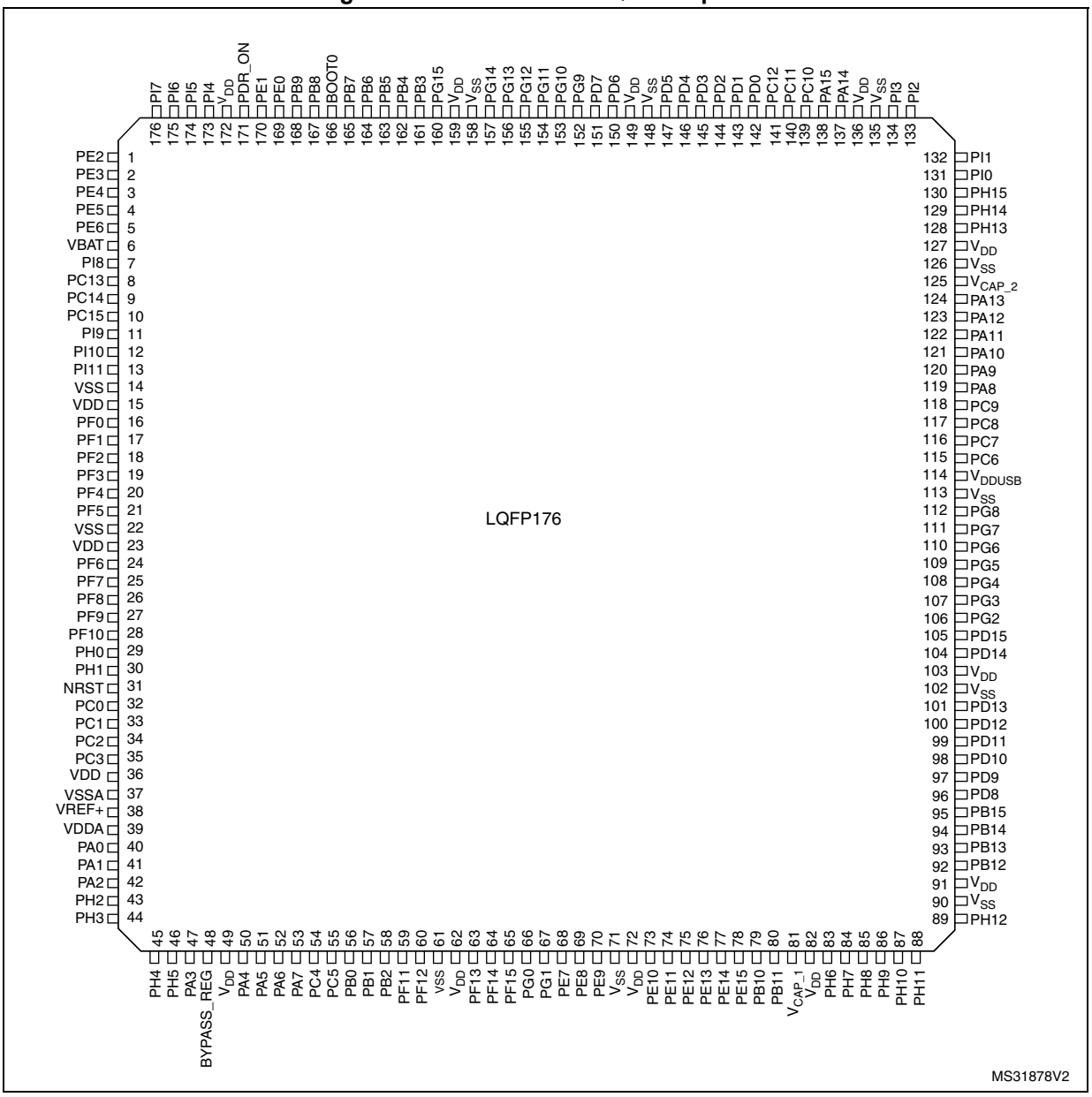

1. The above figure shows the package top view.

Figure 16. STM32F756Bx LQFP208 pinout

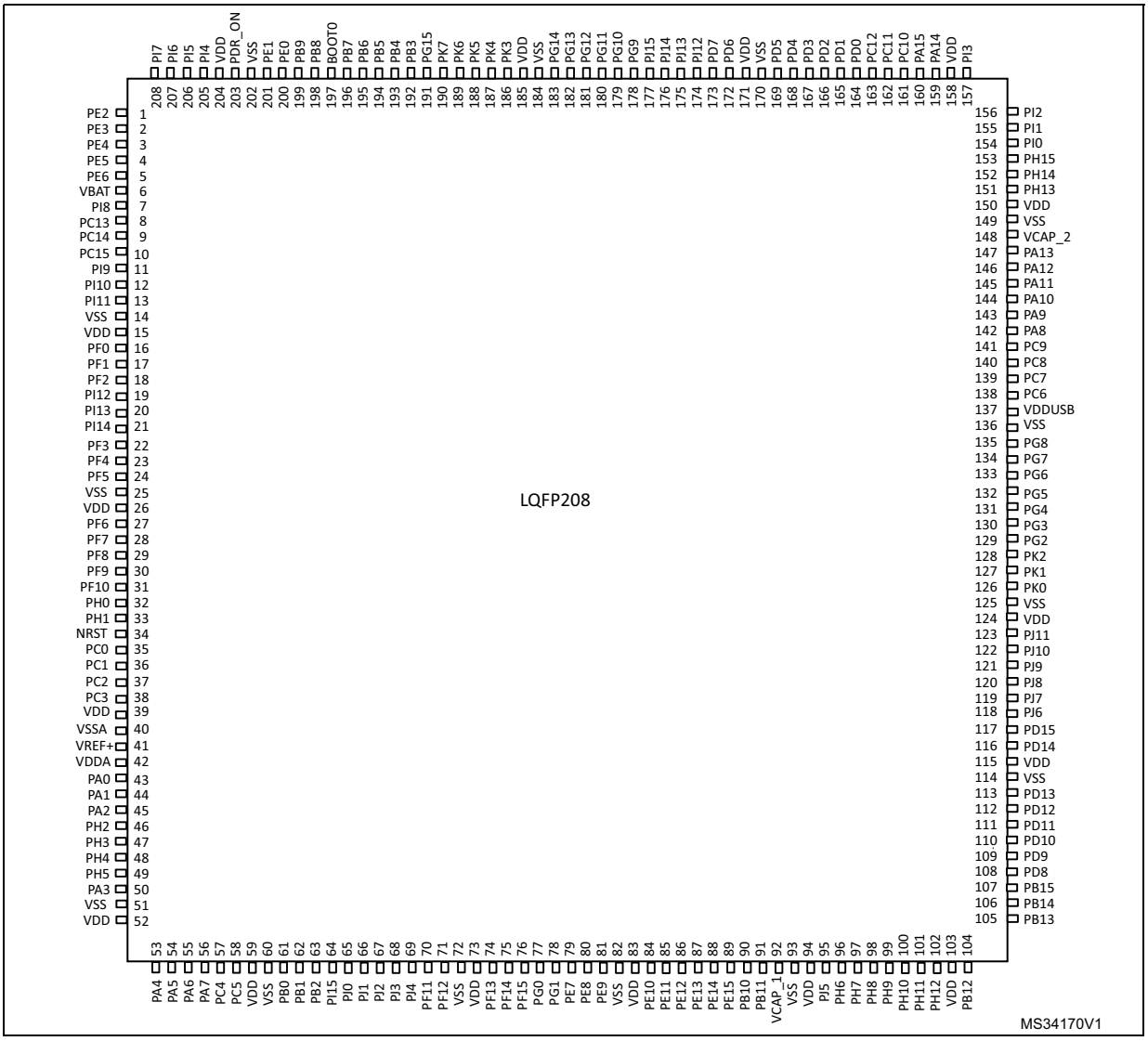

1. The above figure shows the package top view.

Figure 17. STM32F756Ix UFBGA176 ballout

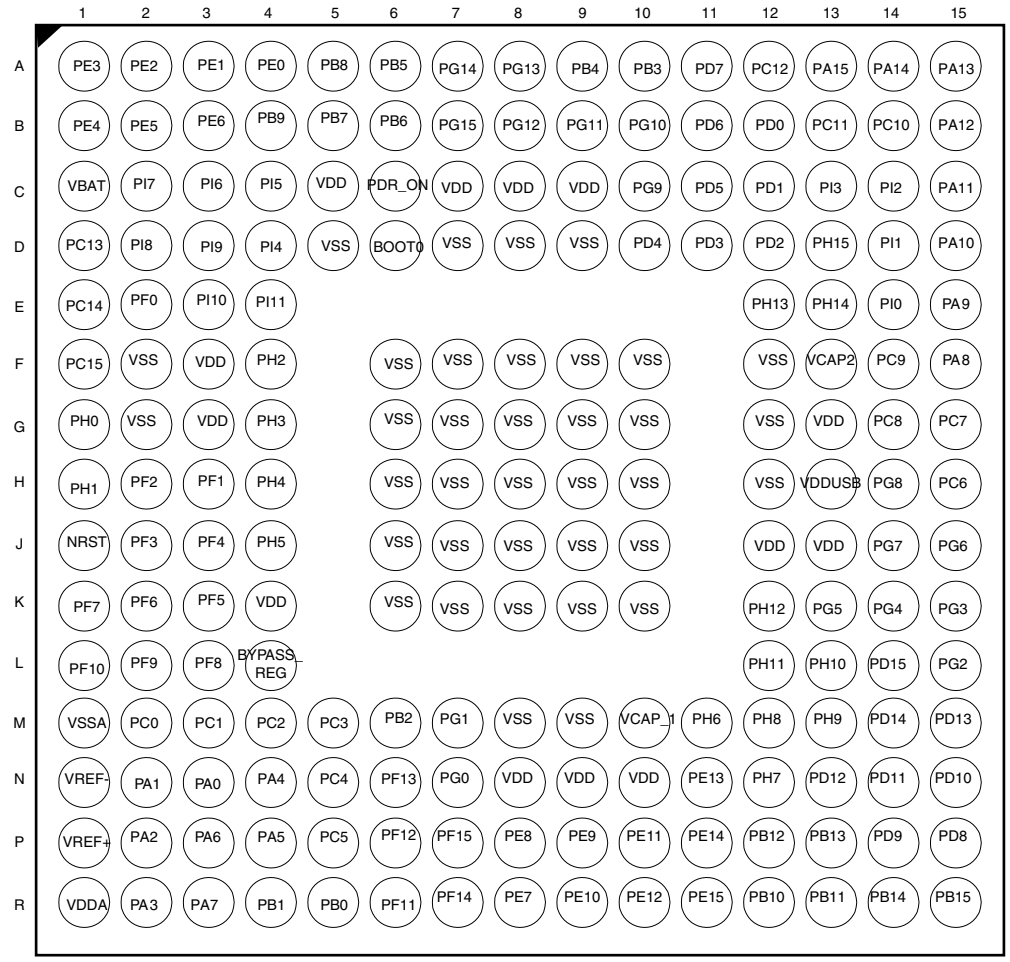

1. The above figure shows the package top view.

Figure 18. STM32F756Nx TFBGA216 ballout

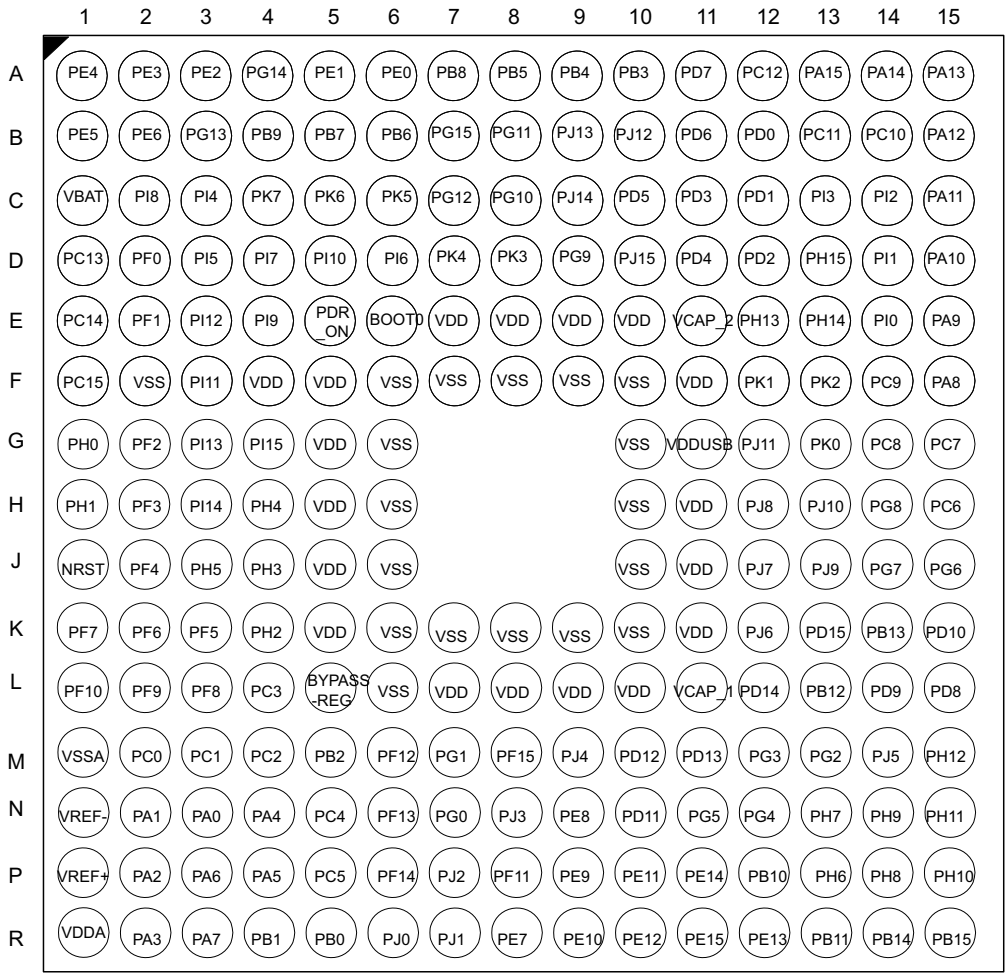

1. The above figure shows the package top view.

Table 9. Legend/abbreviations used in the pinout table

Name	Abbreviation	Definition
Pin name	Unless otherwise specified in brackets below the pin name, the pin function during and after reset is the same as the actual pin name	
Pin type	S	Supply pin
	I	Input only pin
	I/O	Input / output pin
I/O structure	FT	5 V tolerant I/O
	TTa	3.3 V tolerant I/O directly connected to ADC
	B	Dedicated BOOT pin
	RST	Bidirectional reset pin with weak pull-up resistor
Notes	Unless otherwise specified by a note, all I/Os are set as floating inputs during and after reset	
Alternate functions	Functions selected through GPIOx_AFR registers	
Additional functions	Functions directly selected/enabled through peripheral registers	

Table 10. STM32F756xx pin and ball definition

Pin Number								Pin name (function after reset)(1)	Pin type	I/O structure	Notes	Alternate functions	Additional functions
LQFP100	TFBGA100	WLCSP143	LQFP144	UFBGA176	LQFP176	LQFP208	TFBGA216						
1	A3	D8	1	A2	1	1	A3	PE2	I/O	FT	-	TRACECLK, SPI4_SCK, SAI1_MCLK_A, QUADSPI_BK1_IO2, ETH_MII_TXD3, FMC_A23, EVENTOUT	-
2	B3	C10	2	A1	2	2	A2	PE3	I/O	FT	-	TRACED0, SAI1_SD_B, FMC_A19, EVENTOUT	-
3	C3	B11	3	B1	3	3	A1	PE4	I/O	FT	-	TRACED1, SPI4_NSS, SAI1_FS_A, FMC_A20, DCMI_D4, LCD_B0, EVENTOUT	-

Table 10. STM32F756xx pin and ball definition (continued)

Pin Number								Pin name (function after reset)(1)	Pin type	I/O structure	Notes	Alternate functions	Additional functions
LQFP100	TFBGA100	WLCSP143	LQFP144	UFBGA176	LQFP176	LQFP208	TFBGA216						
4	D3	D9	4	B2	4	4	B1	PE5	I/O	FT	-	TRACED2, TIM9_CH1, SPI4_MISO, SAI1_SCK_A, FMC_A21, DCMI_D6, LCD_G0, EVENTOUT	-
5	E3	E8	5	B3	5	5	B2	PE6	I/O	FT	-	TRACED3, TIM1_BKIN2, TIM9_CH2, SPI4_MOSI, SAI1_SD_A, SAI2_MCK_B, FMC_A22, DCMI_D7, LCD_G1, EVENTOUT	-
-	-	-	-	-	-	-	G6	VSS	S	-	-	-	-
-	-	-	-	-	-	-	F5	VDD	S	-	-	-	-
6	B2	C11	6	C1	6	6	C1	VBAT	S	-	-	-	-
-	-	-	-	D2	7	7	C2	PI8	I/O	FT	(2) (3)	EVENTOUT	RTC_TAMP2/ RTC_TS,WKUP5
7	A2	D10	7	D1	8	8	D1	PC13	I/O	FT	(2) (3)	EVENTOUT	RTC_TAMP1/ RTC_TS/RTC_OUT,WKUP4
8	A1	D11	8	E1	9	9	E1	PC14-OSC32_IN(PC14)	I/O	FT	(2) (3)	EVENTOUT	OSC32_IN
9	B1	E11	9	F1	10	10	F1	PC15-OSC32_OUT(PC15)	I/O	FT	(2) (3)	EVENTOUT	OSC32_OUT
-	-	-	-	-	-	-	G5	VDD	S	-	-	-	-
-	-	-	-	D3	11	11	E4	PI9	I/O	FT	-	CAN1_RX, FMC_D30, LCD_VSYNC, EVENTOUT	-
-	-	-	-	E3	12	12	D5	PI10	I/O	FT	-	ETH_MII_RX_ER, FMC_D31, LCD_HSYNC, EVENTOUT	-

Table 10. STM32F756xx pin and ball definition (continued)

Pin Number								Pin name (function after reset)(1)	Pin type	I/O structure	Notes	Alternate functions	Additional functions
LQFP100	TFBGA100	WLCSP143	LQFP144	UFBGA176	LQFP176	LQFP208	TFBGA216						
-	-	-	-	E4	13	13	F3	PI11	I/O	FT	-	OTG_HS_ULPI_DIR, EVENTOUT	WKUP6
-	-	E7	-	F2	14	14	F2	VSS	S	-	-	-	-
-	-	E10	-	F3	15	15	F4	VDD	S	-	-	-	-
-	-	F11	10	E2	16	16	D2	PF0	I/O	FT	-	I2C2_SDA, FMC_A0, EVENTOUT	-
-	-	E9	11	H3	17	17	E2	PF1	I/O	FT	-	I2C2_SCL, FMC_A1, EVENTOUT	-
-	-	F10	12	H2	18	18	G2	PF2	I/O	FT	-	I2C2_SMBA, FMC_A2, EVENTOUT	-
-	-	-	-	-	-	19	E3	PI12	I/O	FT	-	LCD_HSYNC, EVENTOUT	-
-	-	-	-	-	-	20	G3	PI13	I/O	FT	-	LCD_VSYNC, EVENTOUT	-
-	-	-	-	-	-	21	H3	PI14	I/O	FT	-	LCD_CLK, EVENTOUT	-
-	-	G11	13	J2	19	22	H2	PF3	I/O	FT	-	FMC_A3, EVENTOUT	ADC3_IN9
-	-	F9	14	J3	20	23	J2	PF4	I/O	FT	-	FMC_A4, EVENTOUT	ADC3_IN14
-	-	F8	15	K3	21	24	K3	PF5	I/O	FT	-	FMC_A5, EVENTOUT	ADC3_IN15
10	C2	H7	16	G2	22	25	H6	VSS	S	-	-	-	-
11	D2	-	17	G3	23	26	H5	VDD	S	-	-	-	-
-	-	G10	18	K2	24	27	K2	PF6	I/O	FT	-	TIM10_CH1, SPI5_NSS, SAI1_SD_B, UART7_Rx, QUADSPI_BK1_IO3, EVENTOUT	ADC3_IN4
-	-	F7	19	K1	25	28	K1	PF7	I/O	FT	-	TIM11_CH1, SPI5_SCK, SAI1_MCLK_B, UART7_Tx, QUADSPI_BK1_IO2, EVENTOUT	ADC3_IN5

Table 10. STM32F756xx pin and ball definition (continued)

Pin Number								Pin name (function after reset)(1)	Pin type	I/O structure	Notes	Alternate functions	Additional functions
LQFP100	TFBGA100	WLCSP143	LQFP144	UFBGA176	LQFP176	LQFP208	TFBGA216						
-	-	H11	20	L3	26	29	L3	PF8	I/O	FT	-	SPI5_MISO, SAI1_SCK_B, UART7_RTS, TIM13_CH1, QUADSPI_BK1_IO0, EVENTOUT	ADC3_IN6
-	-	G8	21	L2	27	30	L2	PF9	I/O	FT	-	SPI5_MOSI, SAI1_FS_B, UART7_CTS, TIM14_CH1, QUADSPI_BK1_IO1, EVENTOUT	ADC3_IN7
-	-	G9	22	L1	28	31	L1	PF10	I/O	FT	-	DCMI_D11, LCD_DE, EVENTOUT	ADC3_IN8
12	C1	J11	23	G1	29	32	G1	PH0-OSC_IN(PH0)	I/O	FT	-	EVENTOUT	OSC_IN(4)
13	D1	H10	24	H1	30	33	H1	PH1-OSC_OUT(PH1)	I/O	FT	-	EVENTOUT	OSC_OUT(4)
14	E1	H9	25	J1	31	34	J1	NRST	I/O	RST	-	-	-
15	F1	H8	26	M2	32	35	M2	PC0	I/O	FT	(4)	SAI2_FS_B, OTG_HS_ULPI_STP, FMC_SDNWE, LCD_R5, EVENTOUT	ADC123_IN10
16	F2	K11	27	M3	33	36	M3	PC1	I/O	FT	(4)	TRACED0, SPI2_MOSI/I2S2_SD, SAI1_SD_A, ETH_MDC, EVENTOUT	ADC123_IN11, RTC_TAMP3, WKUP3
17	E2	J10	28	M4	34	37	M4	PC2	I/O	FT	(4)	SPI2_MISO, OTG_HS_ULPI_DIR, ETH_MII_TXD2, FMC_SDNE0, EVENTOUT	ADC123_IN12

Table 10. STM32F756xx pin and ball definition (continued)

Pin Number								Pin name (function after reset)(1)	Pin type	I/O structure	Notes	Alternate functions	Additional functions
LQFP100	TFBGA100	WLCSP143	LQFP144	UFBGA176	LQFP176	LQFP208	TFBGA216						
18	F3	J9	29	M5	35	38	L4	PC3	I/O	FT	(4)	SPI2_MOSI/I2S2_SD, OTG_HS_ULPI_NXT, ETH_MII_TX_CLK, FMC_SDCKE0, EVENTOUT	ADC123_IN13
-	-	G7	30	G3	36	39	J5	VDD	S	-	-	-	-
-	-	-	-	-	-	-	J6	VSS	S	-	-	-	-
19	G1	K10	31	M1	37	40	M1	VSSA	S	-	-	-	-
-	-	-	-	N1	-	-	N1	VREF-	S	-	-	-	-
20	-	L11	32	P1	38	41	P1	VREF+	S	-	-	-	-
21	H1	L10	33	R1	39	42	R1	VDDA	S	-	-	-	-
22	G2	K9	34	N3	40	43	N3	PA0-WKUP(PA0)	I/O	FT	(5)	TIM2_CH1/TIM2_ETR, TIM5_CH1, TIM8_ETR, USART2_CTS, UART4_TX, SAI2_SD_B, ETH_MII_CRS, EVENTOUT	ADC123_IN0, WKUP1(4)
23	H2	K8	35	N2	41	44	N2	PA1	I/O	FT	(4)	TIM2_CH2, TIM5_CH2, USART2_RTS, UART4_RX, QUADSPI_BK1_IO3, SAI2_MCK_B, ETH_MII_RX_CLK/ETH_RMII_REF_CLK, LCD_R2, EVENTOUT	ADC123_IN1
24	J2	L9	36	P2	42	45	P2	PA2	I/O	FT	(4)	TIM2_CH3, TIM5_CH3, TIM9_CH1, USART2_TX, SAI2_SCK_B, ETH_MDIO, LCD_R1, EVENTOUT	ADC123_IN2, WKUP2
-	-	-	-	F4	43	46	K4	PH2	I/O	FT		LPTIM1_IN2, QUADSPI_BK2_IO0, SAI2_SCK_B, ETH_MII_CRS, FMC_SDCKE0, LCD_R0, EVENTOUT	-

Table 10. STM32F756xx pin and ball definition (continued)

Pin Number								Pin name (function after reset)(1)	Pin type	I/O structure	Notes	Alternate functions	Additional functions
LQFP100	TFBGA100	WLCSP143	LQFP144	UFBGA176	LQFP176	LQFP208	TFBGA216						
-	-	-	-	G4	44	47	J4	PH3	I/O	FT	-	QUADSPI_BK2_IO1, SAI2_MCK_B, ETH_MII_COL, FMC_SDNE0, LCD_R1, EVENTOUT	-
-	-	-	-	H4	45	48	H4	PH4	I/O	FT	-	I2C2_SCL, OTG_HS_ULPI_NXT, EVENTOUT	-
-	-	-	-	J4	46	49	J3	PH5	I/O	FT	-	I2C2_SDA, SPI5_NSS, FMC_SDNWE, EVENTOUT	-
25	K2	M11	37	R2	47	50	R2	PA3	I/O	FT	(4)	TIM2_CH4, TIM5_CH4, TIM9_CH2, USART2_RX, OTG_HS_ULPI_D0, ETH_MII_COL, LCD_B5, EVENTOUT	ADC123_IN3
26	J1	-	38	-	-	51	K6	VSS	S	-	-	-	-
-	E6	N11	-	L4	48	-	L5	BYPASS _REG	I	FT	-	-	-
27	K1	J8	39	K4	49	52	K5	VDD	S	-	-	-	-
28	G3	M10	40	N4	50	53	N4	PA4	I/O	TT a	(4)	SPI1_NSS/I2S1_WS, SPI3_NSS/I2S3_WS, USART2_CK, OTG_HS_SOF, DCMI_HSYNC, LCD_VSYNC, EVENTOUT	ADC12_IN4, DAC_OUT1
29	H3	M9	41	P4	51	54	P4	PA5	I/O	TT a	(4)	TIM2_CH1/TIM2_ETR, TIM8_CH1N, SPI1_SCK/I2S1_CK, OTG_HS_ULPI_CK, LCD_R4, EVENTOUT	ADC12_IN5, DAC_OUT2
30	J3	N10	42	P3	52	55	P3	PA6	I/O	FT	(4)	TIM1_BKIN, TIM3_CH1, TIM8_BKIN, SPI1_MISO, TIM13_CH1, DCMI_PIXCLK, LCD_G2, EVENTOUT	ADC12_IN6

Table 10. STM32F756xx pin and ball definition (continued)

Pin Number								Pin name (function after reset)(1)	Pin type	I/O structure	Notes	Alternate functions	Additional functions
LQFP100	TFBGA100	WLCSP143	LQFP144	UFBGA176	LQFP176	LQFP208	TFBGA216						
31	K3	L8	43	R3	53	56	R3	PA7	I/O	FT	(4)	TIM1_CH1N, TIM3_CH2, TIM8_CH1N, SPI1_MOSI/I2S1_SD, TIM14_CH1, ETH_MII_RX_DV/ETH_RMII_CRS_DV, FMC_SDNWE, EVENTOUT	ADC12_IN7
32	G4	M8	44	N5	54	57	N5	PC4	I/O	FT	(4)	I2S1_MCK, SPDIFRX_IN2, ETH_MII_RXD0/ETH_RMII_RXD0, FMC_SDNE0, EVENTOUT	ADC12_IN14
33	H4	N9	45	P5	55	58	P5	PC5	I/O	FT	(4)	SPDIFRX_IN3, ETH_MII_RXD1/ETH_RMII_RXD1, FMC_SDCKE0, EVENTOUT	ADC12_IN15
-	-	J7	-	-	-	59	L7	VDD	S	-	-	-	-
-	-	-	-	-	-	60	L6	VSS	S	-	-	-	-
34	J4	N8	46	R5	56	61	R5	PB0	I/O	FT	(4)	TIM1_CH2N, TIM3_CH3, TIM8_CH2N, UART4_CTS, LCD_R3, OTG_HS_ULPI_D1, ETH_MII_RXD2, EVENTOUT	ADC12_IN8
35	K4	K7	47	R4	57	62	R4	PB1	I/O	FT	(4)	TIM1_CH3N, TIM3_CH4, TIM8_CH3N, LCD_R6, OTG_HS_ULPI_D2, ETH_MII_RXD3, EVENTOUT	ADC12_IN9
36	G5	L7	48	M6	58	63	M5	PB2	I/O	FT	-	SAI1_SD_A, SPI3_MOSI/I2S3_SD, QUADSPI_CLK, EVENTOUT	-
-	-	-	-	-	-	64	G4	PI15	I/O	FT	-	LCD_R0, EVENTOUT	-
-	-	-	-	-	-	65	R6	PJ0	I/O	FT	-	LCD_R1, EVENTOUT	-
-	-	-	-	-	-	66	R7	PJ1	I/O	FT	-	LCD_R2, EVENTOUT	-

Table 10. STM32F756xx pin and ball definition (continued)

Pin Number								Pin name (function after reset)(1)	Pin type	I/O structure	Notes	Alternate functions	Additional functions
LQFP100	TFBGA100	WLCSP143	LQFP144	UFBGA176	LQFP176	LQFP208	TFBGA216						
-	-	-	-	-	-	67	P7	PJ2	I/O	FT	-	LCD_R3, EVENTOUT	-
-	-	-	-	-	-	68	N8	PJ3	I/O	FT	-	LCD_R4, EVENTOUT	-
-	-	-	-	-	-	69	M9	PJ4	I/O	FT	-	LCD_R5, EVENTOUT	-
-	-	M7	49	R6	59	70	P8	PF11	I/O	FT	-	SPI5_MOSI, SAI2_SD_B, FMC_SDNRAS, DCMI_D12, EVENTOUT	-
-	-	N7	50	P6	60	71	M6	PF12	I/O	FT	-	FMC_A6, EVENTOUT	-
-	-	-	51	M8	61	72	K7	VSS	S	-	-	-	-
-	-	-	52	N8	62	73	L8	VDD	S	-	-	-	-
-	-	K6	53	N6	63	74	N6	PF13	I/O	FT	-	I2C4_SMBA, FMC_A7, EVENTOUT	-
-	-	L6	54	R7	64	75	P6	PF14	I/O	FT	-	I2C4_SCL, FMC_A8, EVENTOUT	-
-	-	M6	55	P7	65	76	M8	PF15	I/O	FT	-	I2C4_SDA, FMC_A9, EVENTOUT	-
-	-	N6	56	N7	66	77	N7	PG0	I/O	FT	-	FMC_A10, EVENTOUT	-
-	-	K5	57	M7	67	78	M7	PG1	I/O	FT	-	FMC_A11, EVENTOUT	-
37	H5	L5	58	R8	68	79	R8	PE7	I/O	FT	-	TIM1_ETR, UART7_Rx, QUADSPI_BK2_IO0, FMC_D4, EVENTOUT	-
38	J5	M5	59	P8	69	80	N9	PE8	I/O	FT	-	TIM1_CH1N, UART7_Tx, QUADSPI_BK2_IO1, FMC_D5, EVENTOUT	-
39	K5	N5	60	P9	70	81	P9	PE9	I/O	FT	-	TIM1_CH1, UART7_RTS, QUADSPI_BK2_IO2, FMC_D6, EVENTOUT	-
-	-	H3	61	M9	71	82	K8	VSS	S	-	-	-	-
-	-	J5	62	N9	72	83	L9	VDD	S	-	-	-	-
40	G6	J4	63	R9	73	84	R9	PE10	I/O	FT	-	TIM1_CH2N, UART7_CTS, QUADSPI_BK2_IO3, FMC_D7, EVENTOUT	-

Table 10. STM32F756xx pin and ball definition (continued)

Pin Number								Pin name (function after reset)(1)	Pin type	I/O structure	Notes	Alternate functions	Additional functions
LQFP100	TFBGA100	WLCSP143	LQFP144	UFBGA176	LQFP176	LQFP208	TFBGA216						
41	H6	K4	64	P10	74	85	P10	PE11	I/O	FT	-	TIM1_CH2, SPI4_NSS, SAI2_SD_B, FMC_D8, LCD_G3, EVENTOUT	-
42	J6	L4	65	R10	75	86	R10	PE12	I/O	FT	-	TIM1_CH3N, SPI4_SCK, SAI2_SCK_B, FMC_D9, LCD_B4, EVENTOUT	-
43	K6	N4	66	N11	76	87	R12	PE13	I/O	FT	-	TIM1_CH3, SPI4_MISO, SAI2_FS_B, FMC_D10, LCD_DE, EVENTOUT	-
44	G7	M4	67	P11	77	88	P11	PE14	I/O	FT	-	TIM1_CH4, SPI4_MOSI, SAI2_MCK_B, FMC_D11, LCD_CLK, EVENTOUT	-
45	H7	L3	68	R11	78	89	R11	PE15	I/O	FT	-	TIM1_BKIN, FMC_D12, LCD_R7, EVENTOUT	-
46	J7	M3	69	R12	79	90	P12	PB10	I/O	FT	-	TIM2_CH3, I2C2_SCL, SPI2_SCK/I2S2_CK, USART3_TX, OTG_HS_ULPI_D3, ETH_MII_RX_ER, LCD_G4, EVENTOUT	-
47	K7	N3	70	R13	80	91	R13	PB11	I/O	FT	-	TIM2_CH4, I2C2_SDA, USART3_RX, OTG_HS_ULPI_D4, ETH_MII_TX_EN/ETH_RMII_TX_EN, LCD_G5, EVENTOUT	-
48	F8	N2	71	M10	81	92	L11	VCAP_1	S	-	-	-	-
49	-	H2	-	-	-	93	K9	VSS	S	-	-	-	-
50	-	J6	72	N10	82	94	L10	VDD	S	-	-	-	-
-	-	-	-	-	-	95	M14	PJ5	I/O	FT	-	LCD_R6, EVENTOUT	-
-	-	-	-	M11	83	96	P13	PH6	I/O	FT	-	I2C2_SMBA, SPI5_SCK, TIM12_CH1, ETH_MII_RXD2, FMC_SDNE1, DCMI_D8, EVENTOUT	-

Table 10. STM32F756xx pin and ball definition (continued)

Pin Number								Pin name (function after reset)(1)	Pin type	I/O structure	Notes	Alternate functions	Additional functions
LQFP100	TFBGA100	WLCSP143	LQFP144	UFBGA176	LQFP176	LQFP208	TFBGA216						
-	-	-	-	N12	84	97	N13	PH7	I/O	FT	-	I2C3_SCL, SPI5_MISO, ETH_MII_RXD3, FMC_SDCKE1, DCMI_D9, EVENTOUT	-
-	-	-	-	M12	85	98	P14	PH8	I/O	FT	-	I2C3_SDA, FMC_D16, DCMI_HSYNC, LCD_R2, EVENTOUT	-
-	-	-	-	M13	86	99	N14	PH9	I/O	FT	-	I2C3_SMBA, TIM12_CH2, FMC_D17, DCMI_D0, LCD_R3, EVENTOUT	-
-	-	-	-	L13	87	100	P15	PH10	I/O	FT	-	TIM5_CH1, I2C4_SMBA, FMC_D18, DCMI_D1, LCD_R4, EVENTOUT	-
-	-	-	-	L12	88	101	N15	PH11	I/O	FT	-	TIM5_CH2, I2C4_SCL, FMC_D19, DCMI_D2, LCD_R5, EVENTOUT	-
-	-	-	-	K12	89	102	M15	PH12	I/O	FT	-	TIM5_CH3, I2C4_SDA, FMC_D20, DCMI_D3, LCD_R6, EVENTOUT	-
-	-	-	-	H12	90	-	K10	VSS	S	-	-	-	-
-	-	-	-	J12	91	103	K11	VDD	S	-	-	-	-
51	K8	M2	73	P12	92	104	L13	PB12	I/O	FT	-	TIM1_BKIN, I2C2_SMBA, SPI2_NSS/I2S2_WS, USART3_CK, CAN2_RX, OTG_HS_ULPI_D5, ETH_MII_TXD0/ETH_RMII_TXD0, OTG_HS_ID, EVENTOUT	-
52	J8	N1	74	P13	93	105	K14	PB13	I/O	FT	-	TIM1_CH1N, SPI2_SCK/I2S2_CK, USART3_CTS, CAN2_TX, OTG_HS_ULPI_D6, ETH_MII_TXD1/ETH_RMII_TXD1, EVENTOUT	OTG_HS_VBUS

Table 10. STM32F756xx pin and ball definition (continued)

Pin Number								Pin name (function after reset)(1)	Pin type	I/O structure	Notes	Alternate functions	Additional functions
LQFP100	TFBGA100	WLCSP143	LQFP144	UFBGA176	LQFP176	LQFP208	TFBGA216						
53	H10	K3	75	R14	94	106	R14	PB14	I/O	FT	-	TIM1_CH2N, TIM8_CH2N, SPI2_MISO, USART3_RTS, TIM12_CH1, OTG_HS_DM, EVENTOUT	-
54	G10	J3	76	R15	95	107	R15	PB15	I/O	FT	-	RTC_REFIN, TIM1_CH3N, TIM8_CH3N, SPI2_MOSI/I2S2_SD, TIM12_CH2, OTG_HS_DP, EVENTOUT	-
55	K9	L2	77	P15	96	108	L15	PD8	I/O	FT	-	USART3_TX, SPDIFRX_IN11, FMC_D13, EVENTOUT	-
56	J9	M1	78	P14	97	109	L14	PD9	I/O	FT	-	USART3_RX, FMC_D14, EVENTOUT	-
57	H9	H4	79	N15	98	110	K15	PD10	I/O	FT	-	USART3_CK, FMC_D15, LCD_B3, EVENTOUT	-
58	G9	K2	80	N14	99	111	N10	PD11	I/O	FT	-	I2C4_SMBA, USART3_CTS, QUADSPI_BK1_IO0, SAI2_SD_A, FMC_A16/FMC_CLE, EVENTOUT	-
59	K10	H6	81	N13	100	112	M10	PD12	I/O	FT	-	TIM4_CH1, LPTIM1_IN1, I2C4_SCL, USART3_RTS, QUADSPI_BK1_IO1, SAI2_FS_A, FMC_A17/FMC_ALE, EVENTOUT	-
60	J10	H5	82	M15	101	113	M11	PD13	I/O	FT	-	TIM4_CH2, LPTIM1_OUT, I2C4_SDA, QUADSPI_BK1_IO3, SAI2_SCK_A, FMC_A18, EVENTOUT	-

Table 10. STM32F756xx pin and ball definition (continued)

Pin Number								Pin name (function after reset)(1)	Pin type	I/O structure	Notes	Alternate functions	Additional functions
LQFP100	TFBGA100	WLCSP143	LQFP144	UFBGA176	LQFP176	LQFP208	TFBGA216						
-	-	-	83	-	102	114	J10	VSS	S	-	-	-	-
-	-	L1	84	J13	103	115	J11	VDD	S	-	-	-	-
61	H8	J2	85	M14	104	116	L12	PD14	I/O	FT	-	TIM4_CH3, UART8_CTS, FMC_D0, EVENTOUT	-
62	G8	K1	86	L14	105	117	K13	PD15	I/O	FT	-	TIM4_CH4, UART8_RTS, FMC_D1, EVENTOUT	-
-	-	-	-	-	-	118	K12	PJ6	I/O	FT	-	LCD_R7, EVENTOUT	-
-	-	-	-	-	-	119	J12	PJ7	I/O	FT	-	LCD_G0, EVENTOUT	-
-	-	-	-	-	-	120	H12	PJ8	I/O	FT	-	LCD_G1, EVENTOUT	-
-	-	-	-	-	-	121	J13	PJ9	I/O	FT	-	LCD_G2, EVENTOUT	-
-	-	-	-	-	-	122	H13	PJ10	I/O	FT	-	LCD_G3, EVENTOUT	-
-	-	-	-	-	-	123	G12	PJ11	I/O	FT	-	LCD_G4, EVENTOUT	-
-	-	-	-	-	-	124	H11	VDD	S	-	-	-	-
-	-	-	-	-	-	125	H10	VSS	S	-	-	-	-
-	-	-	-	-	-	126	G13	PK0	I/O	FT	-	LCD_G5, EVENTOUT	-
-	-	-	-	-	-	127	F12	PK1	I/O	FT	-	LCD_G6, EVENTOUT	-
-	-	-	-	-	-	128	F13	PK2	I/O	FT	-	LCD_G7, EVENTOUT	-
-	-	J1	87	L15	106	129	M13	PG2	I/O	FT	-	FMC_A12, EVENTOUT	-
-	-	G3	88	K15	107	130	M12	PG3	I/O	FT	-	FMC_A13, EVENTOUT	-
-	-	G5	89	K14	108	131	N12	PG4	I/O	FT	-	FMC_A14/FMC_BA0, EVENTOUT	-
-	-	G6	90	K13	109	132	N11	PG5	I/O	FT	-	FMC_A15/FMC_BA1, EVENTOUT	-
-	-	G4	91	J15	110	133	J15	PG6	I/O	FT	-	DCMI_D12, LCD_R7, EVENTOUT	-
-	-	H1	92	J14	111	134	J14	PG7	I/O	FT	-	USART6_CK, FMC_INT, DCMI_D13, LCD_CLK, EVENTOUT	-

Table 10. STM32F756xx pin and ball definition (continued)

Pin Number								Pin name (function after reset)(1)	Pin type	I/O structure	Notes	Alternate functions	Additional functions
LQFP100	TFBGA100	WLCSP143	LQFP144	UFBGA176	LQFP176	LQFP208	TFBGA216						
-	-	G2	93	H14	112	135	H14	PG8	I/O	FT	-	SPI6_NSS, SPDIFRX_IN2, USART6_RTS, ETH_PPS_OUT, FMC_SDCLK, EVENTOUT	-
-	-	D2	94	G12	113	136	G10	VSS	S	-	-	-	-
-	F6	G1	95	H13	114	137	G11	VDDUSB	S	-	-	-	-
63	F10	F2	96	H15	115	138	H15	PC6	I/O	FT	-	TIM3_CH1, TIM8_CH1, I2S2_MCK, USART6_TX, SDMMC1_D6, DCMI_D0, LCD_HSYNC, EVENTOUT	-
64	E10	F3	97	G15	116	139	G15	PC7	I/O	FT	-	TIM3_CH2, TIM8_CH2, I2S3_MCK, USART6_RX, SDMMC1_D7, DCMI_D1, LCD_G6, EVENTOUT	-
65	F9	E4	98	G14	117	140	G14	PC8	I/O	FT	-	TRACED1, TIM3_CH3, TIM8_CH3, UART5_RTS, USART6_CK, SDMMC1_D0, DCMI_D2, EVENTOUT	-
66	E9	E3	99	F14	118	141	F14	PC9	I/O	FT	-	MCO2, TIM3_CH4, TIM8_CH4, I2C3_SDA, I2S_CKIN, UART5_CTS, QUADSPI_BK1_IO0, SDMMC1_D1, DCMI_D3, EVENTOUT	-
67	D9	F1	100	F15	119	142	F15	PA8	I/O	FT	-	MCO1, TIM1_CH1, TIM8_BKIN2, I2C3_SCL, USART1_CK, OTG_FS_SOF, LCD_R6, EVENTOUT	-
68	C9	E2	101	E15	120	143	E15	PA9	I/O	FT	-	TIM1_CH2, I2C3_SMBA, SPI2_SCK/I2S2_CK, USART1_TX, DCMI_D0, EVENTOUT	OTG_FS_VBUS

Table 10. STM32F756xx pin and ball definition (continued)

Pin Number								Pin name (function after reset)(1)	Pin type	I/O structure	Notes	Alternate functions	Additional functions
LQFP100	TFBGA100	WLCSP143	LQFP144	UFBGA176	LQFP176	LQFP208	TFBGA216						
69	D10	D5	102	D15	121	144	D15	PA10	I/O	FT	-	TIM1_CH3, USART1_RX, OTG_FS_ID, DCMI_D1, EVENTOUT	-
70	C10	D4	103	C15	122	145	C15	PA11	I/O	FT	-	TIM1_CH4, USART1_CTS, CAN1_RX, OTG_FS_DM, LCD_R4, EVENTOUT	-
71	B10	E1	104	B15	123	146	B15	PA12	I/O	FT	-	TIM1_ETR, USART1_RTS, SAI2_FS_B, CAN1_TX, OTG_FS_DP, LCD_R5, EVENTOUT	-
72	A10	D3	105	A15	124	147	A15	PA13(JTMS-SWDIO)	I/O	FT	-	JTMS-SWDIO, EVENTOUT	-
73	E7	D1	106	F13	125	148	E11	VCAP_2	S	-	-	-	-
74	E5	D2	107	F12	126	149	F10	VSS	S	-	-	-	-
75	F5	C1	108	G13	127	150	F11	VDD	S	-	-	-	-
-	-	-	-	E12	128	151	E12	PH13	I/O	FT	-	TIM8_CH1N, CAN1_TX, FMC_D21, LCD_G2, EVENTOUT	-
-	-	-	-	E13	129	152	E13	PH14	I/O	FT	-	TIM8_CH2N, FMC_D22, DCMI_D4, LCD_G3, EVENTOUT	-
-	-	-	-	D13	130	153	D13	PH15	I/O	FT	-	TIM8_CH3N, FMC_D23, DCMI_D11, LCD_G4, EVENTOUT	-
-	-	-	-	E14	131	154	E14	PI0	I/O	FT	-	TIM5_CH4, SPI2_NSS/I2S2_WS, FMC_D24, DCMI_D13, LCD_G5, EVENTOUT	-
-	-	-	-	D14	132	155	D14	PI1	I/O	FT	-	TIM8_BKIN2, SPI2_SCK/I2S2_CK, FMC_D25, DCMI_D8, LCD_G6, EVENTOUT	-

Table 10. STM32F756xx pin and ball definition (continued)

Pin Number								Pin name (function after reset)(1)	Pin type	I/O structure	Notes	Alternate functions	Additional functions
LQFP100	TFBGA100	WLCSP143	LQFP144	UFBGA176	LQFP176	LQFP208	TFBGA216						
-	-	-	-	C14	133	156	C14	PI2	I/O	FT	-	TIM8_CH4, SPI2_MISO, FMC_D26, DCMI_D9, LCD_G7, EVENTOUT	-
-	-	-	-	C13	134	157	C13	PI3	I/O	FT	-	TIM8_ETR, SPI2_MOSI/I2S2_SD, FMC_D27, DCMI_D10, EVENTOUT	-
-	-	F5	-	D9	135	-	F9	VSS	S	-	-	-	-
-	-	A1	-	C9	136	158	E10	VDD	S	-	-	-	-
76	A9	B1	109	A14	137	159	A14	PA14(JTCK-SWCLK)	I/O	FT	-	JTCK-SWCLK, EVENTOUT	-
77	A8	C2	110	A13	138	160	A13	PA15(JTDI)	I/O	FT	-	JTDI, TIM2_CH1/TIM2_ETR, HDMI-CEC, SPI1_NSS/I2S1_WS, SPI3_NSS/I2S3_WS, UART4_RTS, EVENTOUT	-
78	B9	A2	111	B14	139	161	B14	PC10	I/O	FT	-	SPI3_SCK/I2S3_CK, USART3_TX, UART4_TX, QUADSPI_BK1_IO1, SDMMC1_D2, DCMI_D8, LCD_R2, EVENTOUT	-
79	B8	B2	112	B13	140	162	B13	PC11	I/O	FT	-	SPI3_MISO, USART3_RX, UART4_RX, QUADSPI_BK2_NCS, SDMMC1_D3, DCMI_D4, EVENTOUT	-
80	C8	C3	113	A12	141	163	A12	PC12	I/O	FT	-	TRACED3, SPI3_MOSI/I2S3_SD, USART3_CK, UART5_TX, SDMMC1_CK, DCMI_D9, EVENTOUT	-

Table 10. STM32F756xx pin and ball definition (continued)

Pin Number								Pin name (function after reset)(1)	Pin type	I/O structure	Notes	Alternate functions	Additional functions
LQFP100	TFBGA100	WLCSP143	LQFP144	UFBGA176	LQFP176	LQFP208	TFBGA216						
81	D8	B3	114	B12	142	164	B12	PD0	I/O	FT	-	CAN1_RX, FMC_D2, EVENTOUT	-
82	E8	C4	115	C12	143	165	C12	PD1	I/O	FT	-	CAN1_TX, FMC_D3, EVENTOUT	-
83	B7	A3	116	D12	144	166	D12	PD2	I/O	FT	-	TRACED2, TIM3_ETR, UART5_RX, SDMMC1_CMD, DCMI_D11, EVENTOUT	-
84	C7	B4	117	D11	145	167	C11	PD3	I/O	FT	-	SPI2_SCK/I2S2_CK, USART2_CTS, FMC_CLK, DCMI_D5, LCD_G7, EVENTOUT	-
85	D7	B5	118	D10	146	168	D11	PD4	I/O	FT	-	USART2_RTS, FMC_NOE, EVENTOUT	-
86	B6	A4	119	C11	147	169	C10	PD5	I/O	FT	-	USART2_TX, FMC_NWE, EVENTOUT	-
-	-	-	120	D8	148	170	F8	VSS	S	-	-	-	-
-	-	C5	121	C8	149	171	E9	VDD	S	-	-	-	-
87	C6	F4	122	B11	150	172	B11	PD6	I/O	FT	-	SPI3_MOSI/I2S3_SD, SAI1_SD_A, USART2_RX, FMC_NWAIT, DCMI_D10, LCD_B2, EVENTOUT	-
88	D6	A5	123	A11	151	173	A11	PD7	I/O	FT	-	USART2_CK, SPDIFRX_IN0, FMC_NE1, EVENTOUT	-
-	-	-	-	-	-	174	B10	PJ12	I/O	FT	-	LCD_B0, EVENTOUT	-
-	-	-	-	-	-	175	B9	PJ13	I/O	FT	-	LCD_B1, EVENTOUT	-
-	-	-	-	-	-	176	C9	PJ14	I/O	FT	-	LCD_B2, EVENTOUT	-
-	-	-	-	-	-	177	D10	PJ15	I/O	FT	-	LCD_B3, EVENTOUT	-

Table 10. STM32F756xx pin and ball definition (continued)

Pin Number								Pin name (function after reset)(1)	Pin type	I/O structure	Notes	Alternate functions	Additional functions
LQFP100	TFBGA100	WLCSP143	LQFP144	UFBGA176	LQFP176	LQFP208	TFBGA216						
-	-	E5	124	C10	152	178	D9	PG9	I/O	FT	-	SPDIFRX_IN3, USART6_RX, QUADSPI_BK2_IO2, SAI2_FS_B, FMC_NE2/FMC_NCE, DCMI_VSYNC, EVENTOUT	-
-	-	C6	125	B10	153	179	C8	PG10	I/O	FT	-	LCD_G3, SAI2_SD_B, FMC_NE3, DCMI_D2, LCD_B2, EVENTOUT	-
-	--	B6	126	B9	154	180	B8	PG11	I/O	FT	-	SPDIFRX_IN0, ETH_MII_TX_EN/ETH_RMII_TX_EN, DCMI_D3, LCD_B3, EVENTOUT	-
-	-	A6	127	B8	155	181	C7	PG12	I/O	FT	-	LPTIM1_IN1, SPI6_MISO, SPDIFRX_IN1, USART6_RTS, LCD_B4, FMC_NE4, LCD_B1, EVENTOUT	-
-	-	D6	128	A8	156	182	B3	PG13	I/O	FT	-	TRACED0, LPTIM1_OUT, SPI6_SCK, USART6_CTS, ETH_MII_TXD0/ETH_RMII_TXD0, FMC_A24, LCD_R0, EVENTOUT	-
-	-	F6	129	A7	157	183	A4	PG14	I/O	FT	-	TRACED1, LPTIM1_ETR, SPI6_MOSI, USART6_TX, QUADSPI_BK2_IO3, ETH_MII_TXD1/ETH_RMII_TXD1, FMC_A25, LCD_B0, EVENTOUT	-
-	-	-	130	D7	158	184	F7	VSS	S	-	-	-	-
-	-	E6	131	C7	159	185	E8	VDD	S	-	-	-	-

Table 10. STM32F756xx pin and ball definition (continued)

Pin Number								Pin name (function after reset)(1)	Pin type	I/O structure	Notes	Alternate functions	Additional functions
LQFP100	TFBGA100	WLCSP143	LQFP144	UFBGA176	LQFP176	LQFP208	TFBGA216						
-	-	-	-	-	-	186	D8	PK3	I/O	FT	-	LCD_B4, EVENTOUT	-
-	-	-	-	-	-	187	D7	PK4	I/O	FT	-	LCD_B5, EVENTOUT	-
-	-	-	-	-	-	188	C6	PK5	I/O	FT	-	LCD_B6, EVENTOUT	-
-	-	-	-	-	-	189	C5	PK6	I/O	FT	-	LCD_B7, EVENTOUT	-
-	-	-	-	-	-	190	C4	PK7	I/O	FT	-	LCD_DE, EVENTOUT	-
-	-	A7	132	B7	160	191	B7	PG15	I/O	FT	-	USART6_CTS, FMC_SDNCAS, DCMI_D13, EVENTOUT	-
89	A7	B7	133	A10	161	192	A10	PB3(JTDO/TRACESWO)	I/O	FT	-	JTDO/TRACESWO, TIM2_CH2, SPI1_SCK/I2S1_CK, SPI3_SCK/I2S3_CK, EVENTOUT	-
90	A6	C7	134	A9	162	193	A9	PB4(NJTRST)	I/O	FT	-	NJTRST, TIM3_CH1, SPI1_MISO, SPI3_MISO, SPI2_NSS/I2S2_WS, EVENTOUT	-
91	C5	C8	135	A6	163	194	A8	PB5	I/O	FT	-	TIM3_CH2, I2C1_SMBA, SPI1_MOSI/I2S1_SD, SPI3_MOSI/I2S3_SD, CAN2_RX, OTG_HS_ULPI_D7, ETH_PPS_OUT, FMC_SDCKE1, DCMI_D10, EVENTOUT	-
92	B5	A8	136	B6	164	195	B6	PB6	I/O	FT	-	TIM4_CH1, HDMI-CEC, I2C1_SCL, USART1_TX, CAN2_TX, QUADSPI_BK1_NCS, FMC_SDNE1, DCMI_D5, EVENTOUT	-
93	A5	B8	137	B5	165	196	B5	PB7	I/O	FT	-	TIM4_CH2, I2C1_SDA, USART1_RX, FMC_NL, DCMI_VSYNC, EVENTOUT	-
94	D5	C9	138	D6	166	197	E6	BOOT	I	B	-	-	VPP

Table 10. STM32F756xx pin and ball definition (continued)

Pin Number								Pin name (function after reset)(1)	Pin type	I/O structure	Notes	Alternate functions	Additional functions
LQFP100	TFBGA100	WLCSP143	LQFP144	UFBGA176	LQFP176	LQFP208	TFBGA216						
95	B4	A9	139	A5	167	198	A7	PB8	I/O	FT	-	TIM4_CH3, TIM10_CH1, I2C1_SCL, CAN1_RX, ETH_MII_TXD3, SDMMC1_D4, DCMI_D6, LCD_B6, EVENTOUT	-
96	A4	B9	140	B4	168	199	B4	PB9	I/O	FT	-	TIM4_CH4, TIM11_CH1, I2C1_SDA, SPI2_NSS/I2S2_WS, CAN1_TX, SDMMC1_D5, DCMI_D7, LCD_B7, EVENTOUT	-
97	D4	B10	141	A4	169	200	A6	PE0	I/O	FT	-	TIM4_ETR, LPTIM1_ETR, UART8_Rx, SAI2_MCK_A, FMC_NBL0, DCMI_D2, EVENTOUT	-
98	C4	A10	142	A3	170	201	A5	PE1	I/O	FT	-	LPTIM1_IN2, UART8_Tx, FMC_NBL1, DCMI_D3, EVENTOUT	-
99	E4	-	-	D5	-	202	F6	VSS	S	-	-	-	-
-	F7	A11	143	C6	171	203	E5	PDR_ON	S	-	-	-	-
100	F4	D7	144	C5	172	204	E7	VDD	S	-	-	-	-
-	-	-	-	D4	173	205	C3	PI4	I/O	FT	-	TIM8_BKIN, SAI2_MCK_A, FMC_NBL2, DCMI_D5, LCD_B4, EVENTOUT	-
-	-	-	-	C4	174	206	D3	PI5	I/O	FT	-	TIM8_CH1, SAI2_SCK_A, FMC_NBL3, DCMI_VSYNC, LCD_B5, EVENTOUT	-

Table 10. STM32F756xx pin and ball definition (continued)

Pin Number								Pin name (function after reset)(1)	Pin type	I/O structure	Notes	Alternate functions	Additional functions
LQFP100	TFBGA100	WLCSP143	LQFP144	UFBGA176	LQFP176	LQFP208	TFBGA216						
-	-	-	-	C3	175	207	D6	PI6	I/O	FT	-	TIM8_CH2, SAI2_SD_A, FMC_D28, DCMI_D6, LCD_B6, EVENTOUT	-
-	-	-	-	C2	176	208	D4	PI7	I/O	FT	-	TIM8_CH3, SAI2_FS_A, FMC_D29, DCMI_D7, LCD_B7, EVENTOUT	-

1. Function availability depends on the chosen device.
2. PC13, PC14, PC15 and PI8 are supplied through the power switch. Since the switch only sinks a limited amount of current (3 mA), the use of GPIOs PC13 to PC15 and PI8 in output mode is limited:
   - The speed should not exceed 2 MHz with a maximum load of 30 pF.
   - These I/Os must not be used as a current source (e.g. to drive an LED).
3. Main function after the first backup domain power-up. Later on, it depends on the contents of the RTC registers even after reset (because these registers are not reset by the main reset). For details on how to manage these I/Os, refer to the RTC register description sections in the STM32F75xxx and STM32F74xxx reference manual.
4. FT = 5 V tolerant except when in analog mode or oscillator mode (for PC14, PC15, PH0 and PH1).
5. If the device is delivered in an WLCSP143, UFBGA176, LQFP176, TFBGA100 or TFBGA216 package, and the BYPASS_REG pin is set to V_{DD} (Regulator OFF/internal reset ON mode), then PA0 is used as an internal Reset (active low).

Table 11. FMC pin definition

Pin name	NOR/PSRAM/SRAM	NOR/PSRAM Mux	NAND16	SDRAM
PF0	A0	-	-	A0
PF1	A1	-	-	A1
PF2	A2	-	-	A2
PF3	A3	-	-	A3
PF4	A4	-	-	A4
PF5	A5	-	-	A5
PF12	A6	-	-	A6
PF13	A7	-	-	A7
PF14	A8	-	-	A8
PF15	A9	-	-	A9
PG0	A10	-	-	A10
PG1	A11	-	-	A11
PG2	A12	-	-	A12
PG3	A13	-	-	-
PG4	A14	-	-	BA0
PG5	A15	-	-	BA1
PD11	A16	A16	CLE	-
PD12	A17	A17	ALE	-
PD13	A18	A18	-	-
PE3	A19	A19	-	-
PE4	A20	A20	-	-
PE5	A21	A21	-	-
PE6	A22	A22	-	-
PE2	A23	A23	-	-
PG13	A24	A24	-	-
PG14	A25	A25	-	-
PD14	D0	DA0	D0	D0
PD15	D1	DA1	D1	D1
PD0	D2	DA2	D2	D2
PD1	D3	DA3	D3	D3
PE7	D4	DA4	D4	D4
PE8	D5	DA5	D5	D5
PE9	D6	DA6	D6	D6
PE10	D7	DA7	D7	D7

Table 11. FMC pin definition (continued)

Pin name	NOR/PSRAM/SRAM	NOR/PSRAM Mux	NAND16	SDRAM
PE11	D8	DA8	D8	D8
PE12	D9	DA9	D9	D9
PE13	D10	DA10	D10	D10
PE14	D11	DA11	D11	D11
PE15	D12	DA12	D12	D12
PD8	D13	DA13	D13	D13
PD9	D14	DA14	D14	D14
PD10	D15	DA15	D15	D15
PH8	D16	-	-	D16
PH9	D17	-	-	D17
PH10	D18	-	-	D18
PH11	D19	-	-	D19
PH12	D20	-	-	D20
PH13	D21	-	-	D21
PH14	D22	-	-	D22
PH15	D23	-	-	D23
PI0	D24	-	-	D24
PI1	D25	-	-	D25
PI2	D26	-	-	D26
PI3	D27	-	-	D27
PI6	D28	-	-	D28
PI7	D29	-	-	D29
PI9	D30	-	-	D30
PI10	D31	-	-	D31
PD7	NE1	NE1	-	-
PG9	NE2	NE2	NCE	-
PG10	NE3	NE3	-	-
PG11	-	-	-	-
PG12	NE4	NE4	-	-
PD3	CLK	CLK	-	-
PD4	NOE	NOE	NOE	-
PD5	NWE	NWE	NWE	-
PD6	NWAIT	NWAIT	NWAIT	-
PB7	NADV	NADV	-	-

Table 11. FMC pin definition (continued)

Pin name	NOR/PSRAM/SRAM	NOR/PSRAM Mux	NAND16	SDRAM
PF6	-	-	-	-
PF7	-	-	-	-
PF8	-	-	-	-
PF9	-	-	-	-
PF10	-	-	-	-
PG6	-	-	-	-
PG7	-	-	INT	-
PE0	NBL0	NBL0	-	NBL0
PE1	NBL1	NBL1	-	NBL1
PI4	NBL2	-	-	NBL2
PI5	NBL3	-	-	NBL3
PG8	-	-	-	SDCLK
PC0	-	-	-	SDNWE
PF11	-	-	-	SDNRAS
PG15	-	-	-	SDNCAS
PH2	-	-	-	SDCKE0
PH3	-	-	-	SDNE0
PH6	-	-	-	SDNE1
PH7	-	-	-	SDCKE1
PH5	-	-	-	SDNWE
PC2	-	-	-	SDNE0
PC3	-	-	-	SDCKE0
PB5	-	-	-	SDCKE1
PB6	-	-	-	SDNE1

Table 12. STM32F756xx alternate function mapping

Port		AF0	AF1	AF2	AF3	AF4	AF5	AF6	AF7	AF8	AF9	AF10	AF11	AF12	AF13	AF14	AF15
		SYS	TIM1/2	TIM3/4/5	TIM8/9/10/11/LPTIM1/CEC	I2C1/2/3/4/CEC	SPI1/2/3/4/5/6	SPI3/SAI1	SPI2/3/USART1/2/3/UART5/SPDIFRX	SAI2/USART6/UART4/5/7/8/SPDIFRX	CAN1/2/TIM12/13/14/QUADSPI/LCD	SAI2/QUADSPI/OTG2_HS/OTG1_FS	ETH/OTG1_FS	FMC/SDMMC1/OTG2_FS	DCMI	LCD	SYS
Port A	PA0	-	TIM2_CH1/TIM2_ETR	TIM5_CH1	TIM8_ETR	-	-	-	USART2_CTS	UART4_TX	-	SAI2_SD_B	ETH_MII_CRS	-	-	-	EVENTOUT
	PA1	-	TIM2_CH2	TIM5_CH2	-	-	-	-	USART2_RTS	UART4_RX	QUADSPI_BK1_IO3	SAI2_MCK_B	ETH_MII_RX_CLK/ETH_RMII_REF_CLK	-	-	LCD_R2	EVENTOUT
	PA2	-	TIM2_CH3	TIM5_CH3	TIM9_CH1	-	-	-	USART2_TX	SAI2_SCK_B	-	-	ETH_MDIO	-	-	LCD_R1	EVENTOUT
	PA3	-	TIM2_CH4	TIM5_CH4	TIM9_CH2	-	-	-	USART2_RX	-	-	OTG_HS_ULPI_D0	ETH_MII_COL	-	-	LCD_B5	EVENTOUT
	PA4	-	-	-	-	-	SPI1_NSS/I2S1_WS	SPI3_NSS/I2S3_WS	USART2_CK	-	-	-	-	OTG_HS_SOF	DCMI_HSYNC	LCD_VSYNC	EVENTOUT
	PA5	-	TIM2_CH1/TIM2_ETR	-	TIM8_CH1N	-	SPI1_SCK/I2S1_CK	-	-	-	-	OTG_HS_ULPI_CK	-	-	-	LCD_R4	EVENTOUT
	PA6	-	TIM1_BKIN	TIM3_CH1	TIM8_BKIN	-	SPI1_MISO	-	-	-	TIM13_CH1	-	-	-	DCMI_PIXCLK	LCD_G2	EVENTOUT
	PA7	-	TIM1_CH1N	TIM3_CH2	TIM8_CH1N	-	SPI1_MOSI/I2S1_SD	-	-	-	TIM14_CH1	-	ETH_MII_RX_DV/ETH_RMII_CRS_DV	FMC_SDNWE	-	-	EVENTOUT
	PA8	MCO1	TIM1_CH1	-	TIM8_BKIN2	I2C3_SCL	-	-	USART1_CK	-	-	OTG_FS_SOF	-	-	-	LCD_R6	EVENTOUT
	PA9	-	TIM1_CH2	-	-	I2C3_SMBA	SPI2_SCK/I2S2_CK	-	USART1_TX	-	-	-	-	-	DCMI_D0	-	EVENTOUT
	PA10	-	TIM1_CH3	-	-	-	-	-	USART1_RX	-	-	OTG_FS_ID	-	-	DCMI_D1	-	EVENTOUT
	PA11	-	TIM1_CH4	-	-	-	-	-	USART1_CTS	-	CAN1_RX	OTG_FS_DM	-	-	-	LCD_R4	EVENTOUT

Table 12. STM32F756xx alternate function mapping (continued)

Port		AF0	AF1	AF2	AF3	AF4	AF5	AF6	AF7	AF8	AF9	AF10	AF11	AF12	AF13	AF14	AF15
		SYS	TIM1/2	TIM3/4/5	TIM8/9/10/11/LPTIM1/CEC	I2C1/2/3/4/CEC	SPI1/2/3/4/5/6	SPI3/SAI1	SPI2/3/USART1/2/3/UART5/SPDIFRX	SAI2/USART6/UART4/5/7/8/SPDIFRX	CAN1/2/TIM12/13/14/QUADSPI/LCD	SAI2/QUADSPI/OTG2_HS/OTG1_FS	ETH/OTG1_FS	FMC/SDMMC1/OTG2_FS	DCMI	LCD	SYS
Port A	PA12	-	TIM1_ETR	-	-	-	-	-	USART1_RTS	SAI2_FS_B	CAN1_TX	OTG_FS_DP	-	-	-	LCD_R5	EVENTOUT
	PA13	JTMS-SWDIO	-	-	-	-	-	-	-	-	-	-	-	-	-	-	EVENTOUT
	PA14	JTCK-SWCLK	-	-	-	-	-	-	-	-	-	-	-	-	-	-	EVENTOUT
	PA15	JTDI	TIM2_CH1/TIM2_ETR	-	-	HDMI-CEC	SPI1_NSS/I2S1_WS	SPI3_NSS/I2S3_WS	-	UART4_RTS	-	-	-	-	-	-	EVENTOUT
Port B	PB0	-	TIM1_CH2N	TIM3_CH3	TIM8_CH2N	-	-	-	-	UART4_CTS	LCD_R3	OTG_HS_ULPI_D1	ETH_MII_RXD2	-	-	-	EVENTOUT
	PB1	-	TIM1_CH3N	TIM3_CH4	TIM8_CH3N	-	-	-	-	-	LCD_R6	OTG_HS_ULPI_D2	ETH_MII_RXD3	-	-	-	EVENTOUT
	PB2	-	-	-	-	-	-	SAI1_SD_A	SPI3_MOSI/I2S3_SD		QUADSPI_CLK	-	-	-	-	-	EVENTOUT
	PB3	JTDO/TRACESWO	TIM2_CH2	-	-	-	SPI1_SCK/I2S1_CK	SPI3_SCK/I2S3_CK	-	-	-	-	-	-	-	-	EVENTOUT
	PB4	NJTRST	-	TIM3_CH1	-	-	SPI1_MISO	SPI3_MISO	SPI2_NSS/I2S2_WS	-	-	-	-	-	-	-	EVENTOUT
	PB5	-	-	TIM3_CH2	-	I2C1_SMBA	SPI1_MOSI/I2S1_SD	SPI3_MOSI/I2S3_SD	-	-	CAN2_RX	OTG_HS_ULPI_D7	ETH_PPS_OUT	FMC_SDCKE1	DCMI_D10	-	EVENTOUT
	PB6	-	-	TIM4_CH1	HDMI-CEC	I2C1_SCL	-	-	USART1_TX	-	CAN2_TX	QUADSPI_BK1_NCS	-	FMC_SDNE1	DCMI_D5	-	EVENTOUT
	PB7	-	-	TIM4_CH2	-	I2C1_SDA	-	-	USART1_RX	-	-	-	-	FMC_NL	DCMI_VSYNC	-	EVENTOUT
	PB8	-	-	TIM4_CH3	TIM10_CH1	I2C1_SCL	-	-	-	-	CAN1_RX		ETH_MII_TXD3	SDMMC1_D4	DCMI_D6	LCD_B6	EVENTOUT

Table 12. STM32F756xx alternate function mapping (continued)

Port		AF0	AF1	AF2	AF3	AF4	AF5	AF6	AF7	AF8	AF9	AF10	AF11	AF12	AF13	AF14	AF15
		SYS	TIM1/2	TIM3/4/5	TIM8/9/10/11/LPTIM1/CEC	I2C1/2/3/4/CEC	SPI1/2/3/4/5/6	SPI3/SAI1	SPI2/3/USART1/2/3/UART5/SPDIFRX	SAI2/USART6/UART4/5/7/8/SPDIFRX	CAN1/2/TIM12/13/14/QUADSPI/LCD	SAI2/QUADSPI/OTG2_HS/OTG1_FS	ETH/OTG1_FS	FMC/SDMMC1/OTG2_FS	DCMI	LCD	SYS
Port B	PB9	-	-	TIM4_CH4	TIM11_CH1	I2C1_SDA	SPI2_NSS/I2S2_WS	-	-	-	CAN1_TX	-	-	SDMMC1_D5	DCMI_D7	LCD_B7	EVENTOUT
	PB10	-	TIM2_CH3	-	-	I2C2_SCL	SPI2_SCK/I2S2_CK	-	USART3_TX	-	-	OTG_HS_ULPI_D3	ETH_MII_RX_ER	-	-	LCD_G4	EVENTOUT
	PB11	-	TIM2_CH4	-	-	I2C2_SDA	-	-	USART3_RX	-	-	OTG_HS_ULPI_D4	ETH_MII_TX_EN/ETH_RMII_TX_EN	-	-	LCD_G5	EVENTOUT
	PB12	-	TIM1_BKIN	-	-	I2C2_SMBA	SPI2_NSS/I2S2_WS	-	USART3_CK	-	CAN2_RX	OTG_HS_ULPI_D5	ETH_MII_TXD0/ETH_RMII_TXD0	OTG_HS_ID	-	-	EVENTOUT
	PB13	-	TIM1_CH1N	-	-	-	SPI2_SCK/I2S2_CK	-	USART3_CTS	-	CAN2_TX	OTG_HS_ULPI_D6	ETH_MII_TXD1/ETH_RMII_TXD1	-	-	-	EVENTOUT
	PB14	-	TIM1_CH2N	-	TIM8_CH2N	-	SPI2_MISO	-	USART3_RTS	-	TIM12_CH1	-	-	OTG_HS_DM	-	-	EVENTOUT
	PB15	RTC_REFIN	TIM1_CH3N	-	TIM8_CH3N	-	SPI2_MOSI/I2S2_SD	-	-	-	TIM12_CH2	-	-	OTG_HS_DP	-	-	EVENTOUT
Port C	PC0	-	-	-	-	-	-	-	-	SAI2_FS_B	-	OTG_HS_ULPI_STP	-	FMC_SDNWE	-	LCD_R5	EVENTOUT
	PC1	TRACED0	-	-	-	-	SPI2_MOSI/I2S2_SD	SAI1_SD_A	-	-	-	-	ETH_MDC	-	-	-	EVENTOUT
	PC2	-	-	-	-	-	SPI2_MISO	-	-	-	-	OTG_HS_ULPI_DIR	ETH_MII_TXD2	FMC_SDNE0	-	-	EVENTOUT
	PC3	-	-	-	-	-	SPI2_MOSI/I2S2_SD	-	-	-	-	OTG_HS_ULPI_NXT	ETH_MII_TX_CLK	FMC_SDCKE0	-	-	EVENTOUT

Table 12. STM32F756xx alternate function mapping (continued)

Port		AF0	AF1	AF2	AF3	AF4	AF5	AF6	AF7	AF8	AF9	AF10	AF11	AF12	AF13	AF14	AF15
		SYS	TIM1/2	TIM3/4/5	TIM8/9/10/11/LPTIM1/CEC	I2C1/2/3/4/CEC	SPI1/2/3/4/5/6	SPI3/SAI1	SPI2/3/USART1/2/3/UART5/SPDIFRX	SAI2/USART6/UART4/5/7/8/SPDIFRX	CAN1/2/TIM12/13/14/QUADSPI/LCD	SAI2/QUADSPI/OTG2_HS/OTG1_FS	ETH/OTG1_FS	FMC/SDMMC1/OTG2_FS	DCMI	LCD	SYS
Port C	PC4	-	-	-	-	-	I2S1_MCK	-	-	SPDIFRX_IN2	-	-	ETH_MII_RXD0/ETH_RMII_RXD0	FMC_SDNE0	-	-	EVENTOUT
	PC5	-	-	-	-	-	-	-	-	SPDIFRX_IN3	-	-	ETH_MII_RXD1/ETH_RMII_RXD1	FMC_SDCKE0	-	-	EVENTOUT
	PC6	-	-	TIM3_CH1	TIM8_CH1	-	I2S2_MCK	-	-	USART6_TX	-	-	-	SDMMC1_D6	DCMI_D0	LCD_HSYNC	EVENTOUT
	PC7	-	-	TIM3_CH2	TIM8_CH2	-	-	I2S3_MCK	-	USART6_RX	-	-	-	SDMMC1_D7	DCMI_D1	LCD_G6	EVENTOUT
	PC8	TRACED1	-	TIM3_CH3	TIM8_CH3	-	-	-	UART5_RTS	USART6_CK	-	-	-	SDMMC1_D0	DCMI_D2	-	EVENTOUT
	PC9	MCO2	-	TIM3_CH4	TIM8_CH4	I2C3_SDA	I2S_CKIN	-	UART5_CTS	-	QUADSPI_BK1_IO0	-	-	SDMMC1_D1	DCMI_D3	-	EVENTOUT
	PC10	-	-	-	-	-	-	SPI3_SCK/I2S3_CK	USART3_TX	UART4_TX	QUADSPI_BK1_IO1	-	-	SDMMC1_D2	DCMI_D8	LCD_R2	EVENTOUT
	PC11	-	-	-	-	-	-	SPI3_MISO	USART3_RX	UART4_RX	QUADSPI_BK2_NCS	-	-	SDMMC1_D3	DCMI_D4	-	EVENTOUT
	PC12	TRACED3	-	-	-	-	-	SPI3_MOSI/I2S3_SD	USART3_CK	UART5_TX	-	-	-	SDMMC1_CK	DCMI_D9	-	EVENTOUT
	PC13	-	-	-	-	-	-	-	-	-	-	-	-	-	-	-	EVENTOUT
	PC14	-	-	-	-	-	-	-	-	-	-	-	-	-	-	-	EVENTOUT
	PC15	-	-	-	-	-	-	-	-	-	-	-	-	-	-	-	EVENTOUT

Table 12. STM32F756xx alternate function mapping (continued)

Port		AF0	AF1	AF2	AF3	AF4	AF5	AF6	AF7	AF8	AF9	AF10	AF11	AF12	AF13	AF14	AF15
		SYS	TIM1/2	TIM3/4/5	TIM8/9/10/11/LPTIM1/CEC	I2C1/2/3/4/CEC	SPI1/2/3/4/5/6	SPI3/SAI1	SPI2/3/USART1/2/3/UART5/SPDIFRX	SAI2/USART6/UART4/5/7/8/SPDIFRX	CAN1/2/TIM12/13/14/QUADSPI/LCD	SAI2/QUADSPI/OTG2_HS/OTG1_FS	ETH/OTG1_FS	FMC/SDMMC1/OTG2_FS	DCMI	LCD	SYS
Port D	PD0	-	-	-	-	-	-	-	-	-	CAN1_RX	-	-	FMC_D2	-	-	EVENTOUT
	PD1	-	-	-	-	-	-	-	-	-	CAN1_TX	-	-	FMC_D3	-	-	EVENTOUT
	PD2	TRACED2	-	TIM3_ETR	-	-	-	-	-	UART5_RX	-	-	-	SDMMC1_CMD	DCMI_D11	-	EVENTOUT
	PD3	-	-	-	-	-	SPI2_SCK/I2S2_CK	-	USART2_CTS	-	-	-	-	FMC_CLK	DCMI_D5	LCD_G7	EVENTOUT
	PD4	-	-	-	-	-	-	-	USART2_RTS	-	-	-	-	FMC_NOE	-	-	EVENTOUT
	PD5	-	-	-	-	-	-	-	USART2_TX	-	-	-	-	FMC_NWE	-	-	EVENTOUT
	PD6	-	-	-	-	-	SPI3_MOSI/I2S3_SD	SAI1_SD_A	USART2_RX	-	-	-	-	FMC_NWAIT	DCMI_D10	LCD_B2	EVENTOUT
	PD7	-	-	-	-	-	-	-	USART2_CK	SPDIFRX_IN0	-	-	-	FMC_NE1	-	-	EVENTOUT
	PD8	-	-	-	-	-	-	-	USART3_TX	SPDIFRX_IN1	-	-	-	FMC_D13	-	-	EVENTOUT
	PD9	-	-	-	-	-	-	-	USART3_RX	-	-	-	-	FMC_D14	-	-	EVENTOUT
	PD10	-	-	-	-	-	-	-	USART3_CK	-	-	-	-	FMC_D15	-	LCD_B3	EVENTOUT
	PD11	-	-	-	-	I2C4_SMBA	-	-	USART3_CTS	-	QUADSPI_BK1_IO0	SAI2_SD_A	-	FMC_A16/FMC_CLE	-	-	EVENTOUT
	PD12	-	-	TIM4_CH1	LPTIM1_IN1	I2C4_SCL	-	-	USART3_RTS	-	QUADSPI_BK1_IO1	SAI2_FS_A	-	FMC_A17/FMC_ALE	-	-	EVENTOUT
	PD13	-	-	TIM4_CH2	LPTIM1_OUT	I2C4_SDA	-	-	-	-	QUADSPI_BK1_IO3	SAI2_SCK_A	-	FMC_A18	-	-	EVENTOUT

Table 12. STM32F756xx alternate function mapping (continued)

Port		AF0	AF1	AF2	AF3	AF4	AF5	AF6	AF7	AF8	AF9	AF10	AF11	AF12	AF13	AF14	AF15
		SYS	TIM1/2	TIM3/4/5	TIM8/9/10/11/LPTIM1/CEC	I2C1/2/3/4/CEC	SPI1/2/3/4/5/6	SPI3/SAI1	SPI2/3/USART1/2/3/UART5/SPDIFRX	SAI2/USART6/UART4/5/7/8/SPDIFRX	CAN1/2/TIM12/13/14/QUADSPI/LCD	SAI2/QUADSPI/OTG2_HS/OTG1_FS	ETH/OTG1_FS	FMC/SDMMC1/OTG2_FS	DCMI	LCD	SYS
Port D	PD14	-	-	TIM4_CH3	-	-	-	-	-	UART8_CTS	-	-	-	FMC_D0	-	-	EVENTOUT
	PD15	-	-	TIM4_CH4	-	-	-	-	-	UART8_RTS	-	-	-	FMC_D1	-	-	EVENTOUT
Port E	PE0	-	-	TIM4_ETR	LPTIM1_ETR	-	-	-	-	UART8_Rx	-	SAI2_MCK_A	-	FMC_NBL0	DCMI_D2	-	EVENTOUT
	PE1	-	-	-	LPTIM1_IN2	-	-	-	-	UART8_Tx	-	-	-	FMC_NBL1	DCMI_D3	-	EVENTOUT
	PE2	TRACECLK	-	-	-	-	SPI4_SCK	SAI1_MCLK_A	-	-	QUADSPI_BK1_IO2	-	ETH_MII_TXD3	FMC_A23	-	-	EVENTOUT
	PE3	TRACED0	-	-	-	-	-	SAI1_SD_B	-	-	-	-	-	FMC_A19	-	-	EVENTOUT
	PE4	TRACED1	-	-	-	-	SPI4_NSS	SAI1_FS_A	-	-	-	-	-	FMC_A20	DCMI_D4	LCD_B0	EVENTOUT
	PE5	TRACED2	-	-	TIM9_CH1	-	SPI4_MISO	SAI1_SCK_A	-	-	-	-	-	FMC_A21	DCMI_D6	LCD_G0	EVENTOUT
	PE6	TRACED3	TIM1_BKIN2	-	TIM9_CH2	-	SPI4_MOSI	SAI1_SD_A	-	-	-	SAI2_MCK_B	-	FMC_A22	DCMI_D7	LCD_G1	EVENTOUT
	PE7	-	TIM1_ETR	-	-	-	-	-	-	UART7_Rx	-	QUADSPI_BK2_IO0	-	FMC_D4	-	-	EVENTOUT
	PE8	-	TIM1_CH1N	-	-	-	-	-	-	UART7_Tx	-	QUADSPI_BK2_IO1	-	FMC_D5	-	-	EVENTOUT
	PE9	-	TIM1_CH1	-	-	-	-	-	-	UART7_RTS	-	QUADSPI_BK2_IO2	-	FMC_D6	-	-	EVENTOUT
	PE10	-	TIM1_CH2N	-	-	-	-	-	-	UART7_CTS	-	QUADSPI_BK2_IO3	-	FMC_D7	-	-	EVENTOUT
	PE11	-	TIM1_CH2	-	-	-	SPI4_NSS	-	-	-	-	SAI2_SD_B	-	FMC_D8	-	LCD_G3	EVENTOUT
	PE12	-	TIM1_CH3N	-	-	-	SPI4_SCK	-	-	-	-	SAI2_SCK_B	-	FMC_D9	-	LCD_B4	EVENTOUT
	PE13	-	TIM1_CH3	-	-	-	SPI4_MISO	-	-	-	-	SAI2_FS_B	-	FMC_D10	-	LCD_DE	EVENTOUT

Table 12. STM32F756xx alternate function mapping (continued)

Port		AF0	AF1	AF2	AF3	AF4	AF5	AF6	AF7	AF8	AF9	AF10	AF11	AF12	AF13	AF14	AF15
		SYS	TIM1/2	TIM3/4/5	TIM8/9/10/11/LPTIM1/CEC	I2C1/2/3/4/CEC	SPI1/2/3/4/5/6	SPI3/SAI1	SPI2/3/USART1/2/3/UART5/SPDIFRX	SAI2/USART6/UART4/5/7/8/SPDIFRX	CAN1/2/TIM12/13/14/QUADSPI/LCD	SAI2/QUADSPI/OTG2_HS/OTG1_FS	ETH/OTG1_FS	FMC/SDMMC1/OTG2_FS	DCMI	LCD	SYS
Port E	PE14	-	TIM1_CH4	-	-	-	SPI4_MOSI	-	-	-	-	SAI2_MCK_B	-	FMC_D11	-	LCD_CLK	EVENTOUT
	PE15	-	TIM1_BKIN	-	-	-	-	-	-	-	-	-	-	FMC_D12	-	LCD_R7	EVENTOUT
Port F	PF0	-	-	-	-	I2C2_SDA	-	-	-	-	-	-	-	FMC_A0	-	-	EVENTOUT
	PF1	-	-	-	-	I2C2_SCL	-	-	-	-	-	-	-	FMC_A1	-	-	EVENTOUT
	PF2	-	-	-	-	I2C2_SMBA	-	-	-	-	-	-	-	FMC_A2	-	-	EVENTOUT
	PF3	-	-	-	-	-	-	-	-	-	-	-	-	FMC_A3	-	-	EVENTOUT
	PF4	-	-	-	-	-	-	-	-	-	-	-	-	FMC_A4	-	-	EVENTOUT
	PF5	-	-	-	-	-	-	-	-	-	-	-	-	FMC_A5	-	-	EVENTOUT
	PF6	-	-	-	TIM10_CH1	-	SPI5_NSS	SAI1_SD_B	-	UART7_Rx	QUADSPI_BK1_IO3	-	-	-	-	-	EVENTOUT
	PF7	-	-	-	TIM11_CH1	-	SPI5_SCK	SAI1_MCLK_B	-	UART7_Tx	QUADSPI_BK1_IO2	-	-	-	-	-	EVENTOUT
	PF8	-	-	-	-	-	SPI5_MISO	SAI1_SCK_B	-	UART7_RTS	TIM13_CH1	QUADSPI_BK1_IO0	-	-	-	-	EVENTOUT
	PF9	-	-	-	-	-	SPI5_MOSI	SAI1_FS_B	-	UART7_CTS	TIM14_CH1	QUADSPI_BK1_IO1	-	-	-	-	EVENTOUT
	PF10	-	-	-	-	-	-	-	-	-	-	-	-	-	DCMI_D11	LCD_DE	EVENTOUT
	PF11	-	-	-	-	-	SPI5_MOSI	-	-	-	-	SAI2_SD_B	-	FMC_SDNRAS	DCMI_D12	-	EVENTOUT
	PF12	-	-	-	-	-	-	-	-	-	-	-	-	FMC_A6	-	-	EVENTOUT

Table 12. STM32F756xx alternate function mapping (continued)

Port		AF0	AF1	AF2	AF3	AF4	AF5	AF6	AF7	AF8	AF9	AF10	AF11	AF12	AF13	AF14	AF15
		SYS	TIM1/2	TIM3/4/5	TIM8/9/10/11/LPTIM1/CEC	I2C1/2/3/4/CEC	SPI1/2/3/4/5/6	SPI3/SAI1	SPI2/3/USART1/2/3/UART5/SPDIFRX	SAI2/USART6/UART4/5/7/8/SPDIFRX	CAN1/2/TIM12/13/14/QUADSPI/LCD	SAI2/QUADSPI/OTG2_HS/OTG1_FS	ETH/OTG1_FS	FMC/SDMMC1/OTG2_FS	DCMI	LCD	SYS
Port F	PF13	-	-	-	-	I2C4_SMBA	-	-	-	-	-	-	-	FMC_A7	-	-	EVENTOUT
	PF14	-	-	-	-	I2C4_SCL	-	-	-	-	-	-	-	FMC_A8	-	-	EVENTOUT
	PF15	-	-	-	-	I2C4_SDA	-	-	-	-	-	-	-	FMC_A9	-	-	EVENTOUT
Port G	PG0	-	-	-	-	-	-	-	-	-	-	-	-	FMC_A10	-	-	EVENTOUT
	PG1	-	-	-	-	-	-	-	-	-	-	-	-	FMC_A11	-	-	EVENTOUT
	PG2	-	-	-	-	-	-	-	-	-	-	-	-	FMC_A12	-	-	EVENTOUT
	PG3	-	-	-	-	-	-	-	-	-	-	-	-	FMC_A13	-	-	EVENTOUT
	PG4	-	-	-	-	-	-	-	-	-	-	-	-	FMC_A14/FMC_BA0	-	-	EVENTOUT
	PG5	-	-	-	-	-	-	-	-	-	-	-	-	FMC_A15/FMC_BA1	-	-	EVENTOUT
	PG6	-	-	-	-	-	-	-	-	-	-	-	-	-	DCMI_D12	LCD_R7	EVENTOUT
	PG7	-	-	-	-	-	-	-	-	USART6_CK	-	-	-	FMC_INT	DCMI_D13	LCD_CLK	EVENTOUT
	PG8	-	-	-	-	-	SPI6_NSS	-	SPDIFRX_IN2	USART6_RTS	-	-	ETH_PPS_OUT	FMC_SDCLK	-	-	EVENTOUT
	PG9	-	-	-	-	-	-	-	SPDIFRX_IN3	USART6_RX	QUADSPI_BK2_IO2	SAI2_FS_B	-	FMC_NE2/FMC_NCE	DCMI_VSYNC	-	EVENTOUT
	PG10	-	-	-	-	-	-	-	-	-	LCD_G3	SAI2_SD_B	-	FMC_NE3	DCMI_D2	LCD_B2	EVENTOUT

Table 12. STM32F756xx alternate function mapping (continued)

Port		AF0	AF1	AF2	AF3	AF4	AF5	AF6	AF7	AF8	AF9	AF10	AF11	AF12	AF13	AF14	AF15
		SYS	TIM1/2	TIM3/4/5	TIM8/9/10/11/LPTIM1/CEC	I2C1/2/3/4/CEC	SPI1/2/3/4/5/6	SPI3/SAI1	SPI2/3/USART1/2/3/UART5/SPDIFRX	SAI2/USART6/UART4/5/7/8/SPDIFRX	CAN1/2/TIM12/13/14/QUADSPI/LCD	SAI2/QUADSPI/OTG2_HS/OTG1_FS	ETH/OTG1_FS	FMC/SDMMC1/OTG2_FS	DCMI	LCD	SYS
Port G	PG11	-	-	-	-	-	-	-	SPDIFRX_IN0	-	-	-	ETH_MII_TX_EN/ETH_RMII_TX_EN	-	DCMI_D3	LCD_B3	EVENTOUT
	PG12	-	-	-	LPTIM1_IN1	-	SPI6_MISO	-	SPDIFRX_IN1	USART6_RTS	LCD_B4	-	-	FMC_NE4	-	LCD_B1	EVENTOUT
	PG13	TRACED0	-	-	LPTIM1_OUT	-	SPI6_SCK	-	-	USART6_CTS	-	-	ETH_MII_TXD0/ETH_RMII_TXD0	FMC_A24	-	LCD_R0	EVENTOUT
	PG14	TRACED1	-	-	LPTIM1_ETR	-	SPI6_MOSI	-	-	USART6_TX	QUADSPI_BK2_IO3	-	ETH_MII_TXD1/ETH_RMII_TXD1	FMC_A25	-	LCD_B0	EVENTOUT
	PG15	-	-	-	-	-	-	-	-	USART6_CTS	-	-	-	FMC_SDNCAS	DCMI_D13	-	EVENTOUT
Port H	PH0	-	-	-	-	-	-	-	-	-	-	-	-	-	-	-	EVENTOUT
	PH1	-	-	-	-	-	-	-	-	-	-	-	-	-	-	-	EVENTOUT
	PH2	-	-	-	LPTIM1_IN2	-	-	-	-	-	QUADSPI_BK2_IO0	SAI2_SCK_B	ETH_MII_CRS	FMC_SDCKE0	-	LCD_R0	EVENTOUT
	PH3	-	-	-	-	-	-	-	-	-	QUADSPI_BK2_IO1	SAI2_MCK_B	ETH_MII_COL	FMC_SDNE0	-	LCD_R1	EVENTOUT
	PH4	-	-	-	-	I2C2_SCL	-	-	-	-	-	OTG_HS_ULPI_NXT	-	-	-	-	EVENTOUT
	PH5	-	-	-	-	I2C2_SDA	SPI5_NSS	-	-	-	-	-	-	FMC_SDNWE	-	-	EVENTOUT
	PH6	-	-	-	-	I2C2_SMBA	SPI5_SCK	-	-	-	TIM12_CH1	-	ETH_MII_RXD2	FMC_SDNE1	DCMI_D8	-	EVENTOUT
	PH7	-	-	-	-	I2C3_SCL	SPI5_MISO	-	-	-	-	-	ETH_MII_RXD3	FMC_SDCKE1	DCMI_D9	-	EVENTOUT

Table 12. STM32F756xx alternate function mapping (continued)

Port		AF0	AF1	AF2	AF3	AF4	AF5	AF6	AF7	AF8	AF9	AF10	AF11	AF12	AF13	AF14	AF15
		SYS	TIM1/2	TIM3/4/5	TIM8/9/10/11/LPTIM1/CEC	I2C1/2/3/4/CEC	SPI1/2/3/4/5/6	SPI3/SAI1	SPI2/3/USART1/2/3/UART5/SPDIFRX	SAI2/USART6/UART4/5/7/8/SPDIFRX	CAN1/2/TIM12/13/14/QUADSPI/LCD	SAI2/QUADSPI/OTG2_HS/OTG1_FS	ETH/OTG1_FS	FMC/SDMMC1/OTG2_FS	DCMI	LCD	SYS
Port H	PH8	-	-	-	-	I2C3_SDA	-	-	-	-	-	-	-	FMC_D16	DCMI_HSYNC	LCD_R2	EVENTOUT
	PH9	-	-	-	-	I2C3_SMBA	-	-	-	-	TIM12_CH2	-	-	FMC_D17	DCMI_D0	LCD_R3	EVENTOUT
	PH10	-	-	TIM5_CH1	-	I2C4_SMBA	-	-	-	-	-	-	-	FMC_D18	DCMI_D1	LCD_R4	EVENTOUT
	PH11	-	-	TIM5_CH2	-	I2C4_SCL	-	-	-	-	-	-	-	FMC_D19	DCMI_D2	LCD_R5	EVENTOUT
	PH12	-	-	TIM5_CH3	-	I2C4_SDA	-	-	-	-	-	-	-	FMC_D20	DCMI_D3	LCD_R6	EVENTOUT
	PH13	-	-	-	TIM8_CH1N	-	-	-	-	-	CAN1_TX	-	-	FMC_D21	-	LCD_G2	EVENTOUT
	PH14	-	-	-	TIM8_CH2N	-	-	-	-	-	-	-	-	FMC_D22	DCMI_D4	LCD_G3	EVENTOUT
	PH15	-	-	-	TIM8_CH3N	-	-	-	-	-	-	-	-	FMC_D23	DCMI_D11	LCD_G4	EVENTOUT
Port I	PI0	-	-	TIM5_CH4	-	-	SPI2_NSS/I2S2_WS	-	-	-	-	-	-	FMC_D24	DCMI_D13	LCD_G5	EVENTOUT
	PI1	-	-	-	TIM8_BKIN2	-	SPI2_SCK/I2S2_CK	-	-	-	-	-	-	FMC_D25	DCMI_D8	LCD_G6	EVENTOUT
	PI2	-	-	-	TIM8_CH4	-	SPI2_MISO	-	-	-	-	-	-	FMC_D26	DCMI_D9	LCD_G7	EVENTOUT
	PI3	-	-	-	TIM8_ETR	-	SPI2_MOSI/I2S2_SD	-	-	-	-	-	-	FMC_D27	DCMI_D10	-	EVENTOUT
	PI4	-	-	-	TIM8_BKIN	-	-	-	-	-	-	SAI2_MCK_A	-	FMC_NBL2	DCMI_D5	LCD_B4	EVENTOUT
	PI5	-	-	-	TIM8_CH1	-	-	-	-	-	-	SAI2_SCK_A	-	FMC_NBL3	DCMI_VSYNC	LCD_B5	EVENTOUT
	PI6	-	-	-	TIM8_CH2	-	-	-	-	-	-	SAI2_SD_A	-	FMC_D28	DCMI_D6	LCD_B6	EVENTOUT

Table 12. STM32F756xx alternate function mapping (continued)

Port		AF0	AF1	AF2	AF3	AF4	AF5	AF6	AF7	AF8	AF9	AF10	AF11	AF12	AF13	AF14	AF15
		SYS	TIM1/2	TIM3/4/5	TIM8/9/10/11/LPTIM1/CEC	I2C1/2/3/4/CEC	SPI1/2/3/4/5/6	SPI3/SAI1	SPI2/3/USART1/2/3/UART5/SPDIFRX	SAI2/USART6/UART4/5/7/8/SPDIFRX	CAN1/2/TIM12/13/14/QUADSPI/LCD	SAI2/QUADSPI/OTG2_HS/OTG1_FS	ETH/OTG1_FS	FMC/SDMMC1/OTG2_FS	DCMI	LCD	SYS
Port I	PI7	-	-	-	TIM8_CH3	-	-	-	-	-	-	SAI2_FS_A	-	FMC_D29	DCMI_D7	LCD_B7	EVENTOUT
	PI8	-	-	-	-	-	-	-	-	-	-	-	-	-	-	-	EVENTOUT
	PI9	-	-	-	-	-	-	-	-	-	CAN1_RX	-	-	FMC_D30	-	LCD_VSYNC	EVENTOUT
	PI10	-	-	-	-	-	-	-	-	-	-	-	ETH_MII_RX_ER	FMC_D31	-	LCD_HSYNC	EVENTOUT
	PI11	-	-	-	-	-	-	-	-	-	-	OTG_HS_ULPI_DIR	-	-	-	-	EVENTOUT
	PI12	-	-	-	-	-	-	-	-	-	-	-	-	-	-	LCD_HSYNC	EVENTOUT
	PI13	-	-	-	-	-	-	-	-	-	-	-	-	-	-	LCD_VSYNC	EVENTOUT
	PI14	-	-	-	-	-	-	-	-	-	-	-	-	-	-	LCD_CLK	EVENTOUT
	PI15	-	-	-	-	-	-	-	-	-	-	-	-	-	-	LCD_R0	EVENTOUT
Port J	PJ0	-	-	-	-	-	-	-	-	-	-	-	-	-	-	LCD_R1	EVENTOUT
	PJ1	-	-	-	-	-	-	-	-	-	-	-	-	-	-	LCD_R2	EVENTOUT
	PJ2	-	-	-	-	-	-	-	-	-	-	-	-	-	-	LCD_R3	EVENTOUT
	PJ3	-	-	-	-	-	-	-	-	-	-	-	-	-	-	LCD_R4	EVENTOUT
	PJ4	-	-	-	-	-	-	-	-	-	-	-	-	-	-	LCD_R5	EVENTOUT
	PJ5	-	-	-	-	-	-	-	-	-	-	-	-	-	-	LCD_R6	EVENTOUT
	PJ6	-	-	-	-	-	-	-	-	-	-	-	-	-	-	LCD_R7	EVENTOUT

Table 12. STM32F756xx alternate function mapping (continued)

Port		AF0	AF1	AF2	AF3	AF4	AF5	AF6	AF7	AF8	AF9	AF10	AF11	AF12	AF13	AF14	AF15
		SYS	TIM1/2	TIM3/4/5	TIM8/9/10/11/LPTIM1/CEC	I2C1/2/3/4/CEC	SPI1/2/3/4/5/6	SPI3/SAI1	SPI2/3/USART1/2/3/UART5/SPDIFRX	SAI2/USART6/UART4/5/7/8/SPDIFRX	CAN1/2/TIM12/13/14/QUADSPI/LCD	SAI2/QUADSPI/OTG2_HS/OTG1_FS	ETH/OTG1_FS	FMC/SDMMC1/OTG2_FS	DCMI	LCD	SYS
Port J	PJ7	-	-	-	-	-	-	-	-	-	-	-	-	-	-	LCD_G0	EVENTOUT
	PJ8	-	-	-	-	-	-	-	-	-	-	-	-	-	-	LCD_G1	EVENTOUT
	PJ9	-	-	-	-	-	-	-	-	-	-	-	-	-	-	LCD_G2	EVENTOUT
	PJ10	-	-	-	-	-	-	-	-	-	-	-	-	-	-	LCD_G3	EVENTOUT
	PJ11	-	-	-	-	-	-	-	-	-	-	-	-	-	-	LCD_G4	EVENTOUT
	PJ12	-	-	-	-	-	-	-	-	-	-	-	-	-	-	LCD_B0	EVENTOUT
	PJ13	-	-	-	-	-	-	-	-	-	-	-	-	-	-	LCD_B1	EVENTOUT
	PJ14	-	-	-	-	-	-	-	-	-	-	-	-	-	-	LCD_B2	EVENTOUT
	PJ15	-	-	-	-	-	-	-	-	-	-	-	-	-	-	LCD_B3	EVENTOUT

Table 12. STM32F756xx alternate function mapping (continued)

Port		AF0	AF1	AF2	AF3	AF4	AF5	AF6	AF7	AF8	AF9	AF10	AF11	AF12	AF13	AF14	AF15
		SYS	TIM1/2	TIM3/4/5	TIM8/9/10/11/LPTIM1/CEC	I2C1/2/3/4/CEC	SPI1/2/3/4/5/6	SPI3/SAI1	SPI2/3/USART1/2/3/UART5/SPDIFRX	SAI2/USART6/UART4/5/7/8/SPDIFRX	CAN1/2/TIM12/13/14/QUADSPI/LCD	SAI2/QUADSPI/OTG2_HS/OTG1_FS	ETH/OTG1_FS	FMC/SDMMC1/OTG2_FS	DCMI	LCD	SYS
Port K	PK0	-	-	-	-	-	-	-	-	-	-	-	-	-	-	LCD_G5	EVENTOUT
	PK1	-	-	-	-	-	-	-	-	-	-	-	-	-	-	LCD_G6	EVENTOUT
	PK2	-	-	-	-	-	-	-	-	-	-	-	-	-	-	LCD_G7	EVENTOUT
	PK3	-	-	-	-	-	-	-	-	-	-	-	-	-	-	LCD_B4	EVENTOUT
	PK4	-	-	-	-	-	-	-	-	-	-	-	-	-	-	LCD_B5	EVENTOUT
	PK5	-	-	-	-	-	-	-	-	-	-	-	-	-	-	LCD_B6	EVENTOUT
	PK6	-	-	-	-	-	-	-	-	-	-	-	-	-	-	LCD_B7	EVENTOUT
	PK7	-	-	-	-	-	-	-	-	-	-	-	-	-	-	LCD_DE	EVENTOUT

4 Memory mapping

The memory map is shown in *Figure 19*.

Figure 19. Memory map

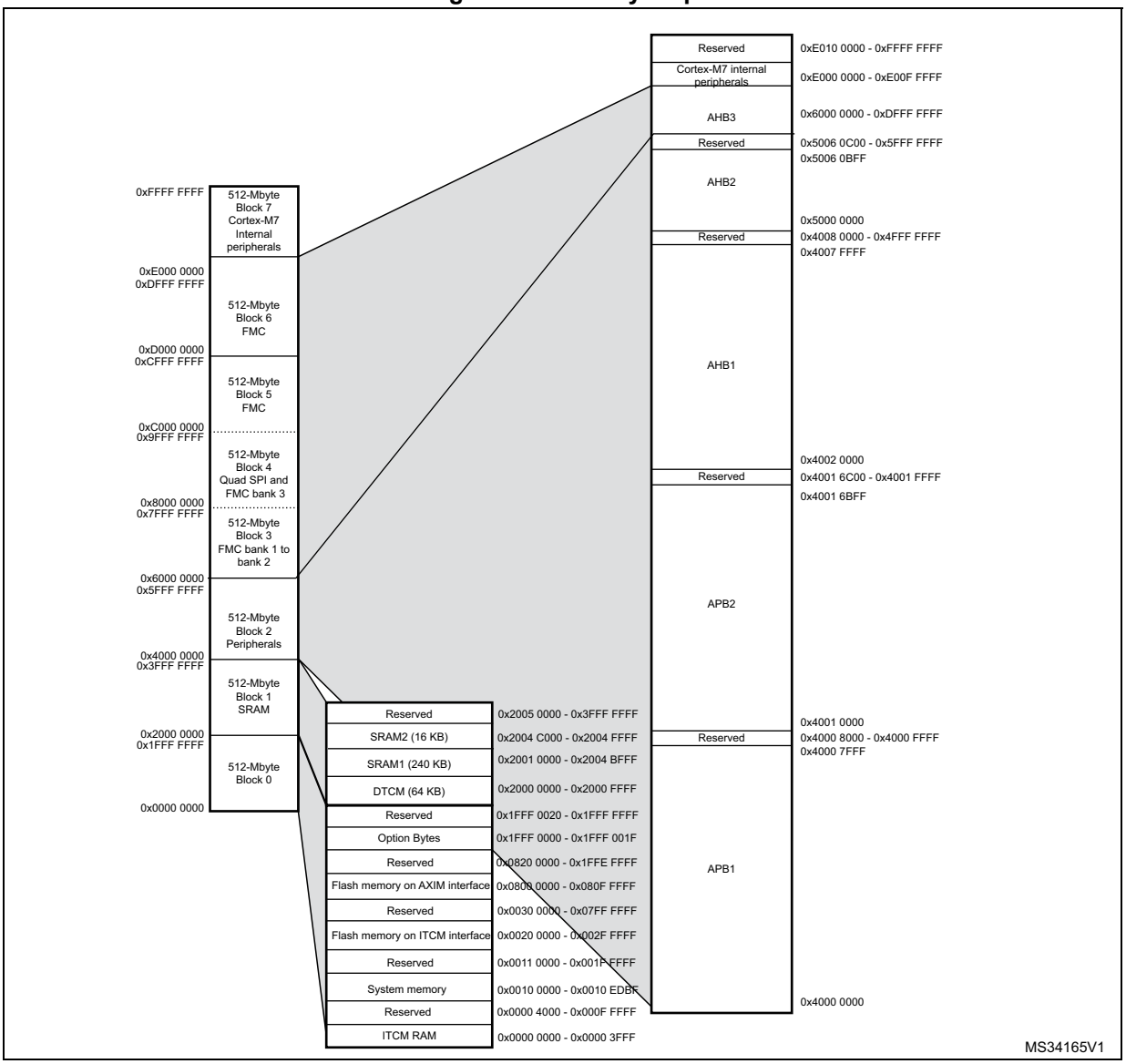

Table 13. STM32F756xx register boundary addresses

Bus	Boundary address	Peripheral
	0xE00F FFFF - 0xFFFF FFFF	Reserved
Cortex-M7	0xE000 0000 - 0xE00F FFFF	Cortex-M7 internal peripherals
AHB3	0xD000 0000 - 0xDFFF FFFF	FMC bank 6
	0xC000 0000 - 0xCFFF FFFF	FMC bank 5
	0xA000 2000 - 0xBFFF FFFF	Reserved
	0xA000 1000 - 0xA000 1FFF	Quad-SPI control register
	0xA000 0000- 0xA000 0FFF	FMC control register
	0x9000 0000 - 0x9FFF FFFF	Quad-SPI
	0x8000 0000 - 0x8FFF FFFF	FMC bank 3
	0x7000 0000 - 0x7FFF FFFF	FMC bank 2
	0x6000 0000 - 0x6FFF FFFF	FMC bank 1
	0x5006 0C00- 0x5FFF FFFF	Reserved
AHB2	0x5006 0800 - 0x5006 0BFF	RNG
	0x5006 0400 - 0x5006 07FF	HASH
	0x5006 0000 - 0x5006 03FF	CRYP
	0x5005 0400 - 0x5005 FFFF	Reserved
	0x5005 0000 - 0x5005 03FF	DCMI
	0x5004 0000- 0x5004 FFFF	Reserved
	0x5000 0000 - 0x5003 FFFF	USB OTG FS

Table 13. STM32F756xx register boundary addresses (continued)

Bus	Boundary address	Peripheral
	0x4008 0000- 0x4FFF FFFF	Reserved
AHB1	0x4004 0000 - 0x4007 FFFF	USB OTG HS
	0x4002 BC00- 0x4003 FFFF	Reserved
	0x4002 B000 - 0x4002 BBFF	Chrom-ART (DMA2D)
	0x4002 9400 - 0x4002 AFFF	Reserved
	0x4002 9000 - 0x4002 93FF	ETHERNET MAC
	0x4002 8C00 - 0x4002 8FFF	
	0x4002 8800 - 0x4002 8BFF	
	0x4002 8400 - 0x4002 87FF	
	0x4002 8000 - 0x4002 83FF	
	0x4002 6800 - 0x4002 7FFF	Reserved
	0x4002 6400 - 0x4002 67FF	DMA2
	0x4002 6000 - 0x4002 63FF	DMA1
	0x4002 5000 - 0X4002 5FFF	Reserved
	0x4002 4000 - 0x4002 4FFF	BKPSRAM
	0x4002 3C00 - 0x4002 3FFF	Flash interface register
	0x4002 3800 - 0x4002 3BFF	RCC
	0X4002 3400 - 0X4002 37FF	Reserved
	0x4002 3000 - 0x4002 33FF	CRC
	0x4002 2C00 - 0x4002 2FFF	Reserved
	0x4002 2800 - 0x4002 2BFF	GPIOK
	0x4002 2400 - 0x4002 27FF	GPIOJ
	0x4002 2000 - 0x4002 23FF	GPIOI
	0x4002 1C00 - 0x4002 1FFF	GPIOH
	0x4002 1800 - 0x4002 1BFF	GPIOG
	0x4002 1400 - 0x4002 17FF	GPIOF
	0x4002 1000 - 0x4002 13FF	GPIOE
	0X4002 0C00 - 0x4002 0FFF	GPIOD
	0x4002 0800 - 0x4002 0BFF	GPIOC
	0x4002 0400 - 0x4002 07FF	GPIOB
	0x4002 0000 - 0x4002 03FF	GPIOA

Table 13. STM32F756xx register boundary addresses (continued)

Bus	Boundary address	Peripheral
	0x4001 6C00- 0x4001 FFFF	Reserved
APB2	0x4001 6800 - 0x4001 6BFF	LCD-TFT
	0x4001 6000 - 0x4001 67FF	Reserved
	0x4001 5C00 - 0x4001 5FFF	SAI2
	0x4001 5800 - 0x4001 5BFF	SAI1
	0x4001 5400 - 0x4001 57FF	SPI6
	0x4001 5000 - 0x4001 53FF	SPI5
	0x4001 4C00 - 0x4001 4FFF	Reserved
	0x4001 4800 - 0x4001 4BFF	TIM11
	0x4001 4400 - 0x4001 47FF	TIM10
	0x4001 4000 - 0x4001 43FF	TIM9
	0x4001 3C00 - 0x4001 3FFF	EXTI
	0x4001 3800 - 0x4001 3BFF	SYSCFG
	0x4001 3400 - 0x4001 37FF	SPI4
	0x4001 3000 - 0x4001 33FF	SPI1/I2S1
	0x4001 2C00 - 0x4001 2FFF	SDMMC
	0x4001 2400 - 0x4001 2BFF	Reserved
	0x4001 2000 - 0x4001 23FF	ADC1 - ADC2 - ADC3
	0x4001 1800 - 0x4001 1FFF	Reserved
	0x4001 1400 - 0x4001 17FF	USART6
	0x4001 1000 - 0x4001 13FF	USART1
	0x4001 0800 - 0x4001 0FFF	Reserved
	0x4001 0400 - 0x4001 07FF	TIM8
	0x4001 0000 - 0x4001 03FF	TIM1

Table 13. STM32F756xx register boundary addresses (continued)

Bus	Boundary address	Peripheral
	0x4000 8000- 0x4000 FFFF	Reserved
APB1	0x4000 7C00 - 0x4000 7FFF	UART8
	0x4000 7800 - 0x4000 7BFF	UART7
	0x4000 7400 - 0x4000 77FF	DAC
	0x4000 7000 - 0x4000 73FF	PWR
	0x4000 6C00 - 0x4000 6FFF	HDMI-CEC
	0x4000 6800 - 0x4000 6BFF	CAN2
	0x4000 6400 - 0x4000 67FF	CAN1
	0x4000 6000 - 0x4000 63FF	I2C4
	0x4000 5C00 - 0x4000 5FFF	I2C3
	0x4000 5800 - 0x4000 5BFF	I2C2
	0x4000 5400 - 0x4000 57FF	I2C1
	0x4000 5000 - 0x4000 53FF	UART5
	0x4000 4C00 - 0x4000 4FFF	UART4
	0x4000 4800 - 0x4000 4BFF	USART3
	0x4000 4400 - 0x4000 47FF	USART2
	0x4000 4000 - 0x4000 43FF	SPDIFRX
	0x4000 3C00 - 0x4000 3FFF	SPI3 / I2S3
	0x4000 3800 - 0x4000 3BFF	SPI2 / I2S2
	0x4000 3400 - 0x4000 37FF	Reserved
	0x4000 3000 - 0x4000 33FF	IWDG
	0x4000 2C00 - 0x4000 2FFF	WWDG
	0x4000 2800 - 0x4000 2BFF	RTC & BKP Registers
	0x4000 2400 - 0x4000 27FF	LPTIM1
	0x4000 2000 - 0x4000 23FF	TIM14
	0x4000 1C00 - 0x4000 1FFF	TIM13
	0x4000 1800 - 0x4000 1BFF	TIM12
	0x4000 1400 - 0x4000 17FF	TIM7
	0x4000 1000 - 0x4000 13FF	TIM6
	0x4000 0C00 - 0x4000 0FFF	TIM5
	0x4000 0800 - 0x4000 0BFF	TIM4
	0x4000 0400 - 0x4000 07FF	TIM3
	0x4000 0000 - 0x4000 03FF	TIM2

5 Electrical characteristics

5.1 Parameter conditions

Unless otherwise specified, all voltages are referenced to V_{SS}.

5.1.1 Minimum and maximum values

Unless otherwise specified the minimum and maximum values are guaranteed in the worst conditions of ambient temperature, supply voltage and frequencies by tests in production on 100% of the devices with an ambient temperature at T_A = 25 °C and T_A = $T_A$max (given by the selected temperature range).

Data based on characterization results, design simulation and/or technology characteristics are indicated in the table footnotes and are not tested in production. Based on characterization, the minimum and maximum values refer to sample tests and represent the mean value plus or minus three times the standard deviation (mean±3σ).

5.1.2 Typical values

Unless otherwise specified, typical data are based on T_A = 25 °C, V_{DD} = 3.3 V (for the 1.7 V ≤V_{DD} ≤3.6 V voltage range). They are given only as design guidelines and are not tested.

Typical ADC accuracy values are determined by characterization of a batch of samples from a standard diffusion lot over the full temperature range, where 95% of the devices have an error less than or equal to the value indicated (mean±2σ).

5.1.3 Typical curves

Unless otherwise specified, all typical curves are given only as design guidelines and are not tested.

5.1.4 Loading capacitor

The loading conditions used for pin parameter measurement are shown in *Figure 20*.

5.1.5 Pin input voltage

The input voltage measurement on a pin of the device is described in *Figure 21*.

Figure 20. Pin loading conditions

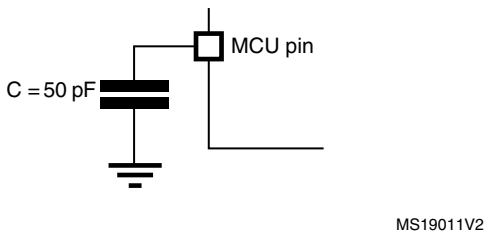

Figure 21. Pin input voltage

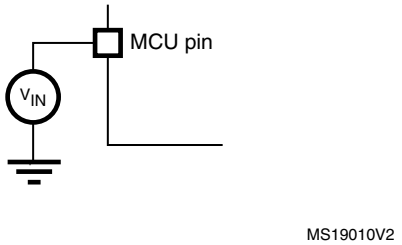

5.1.6 Power supply scheme

Figure 22. Power supply scheme

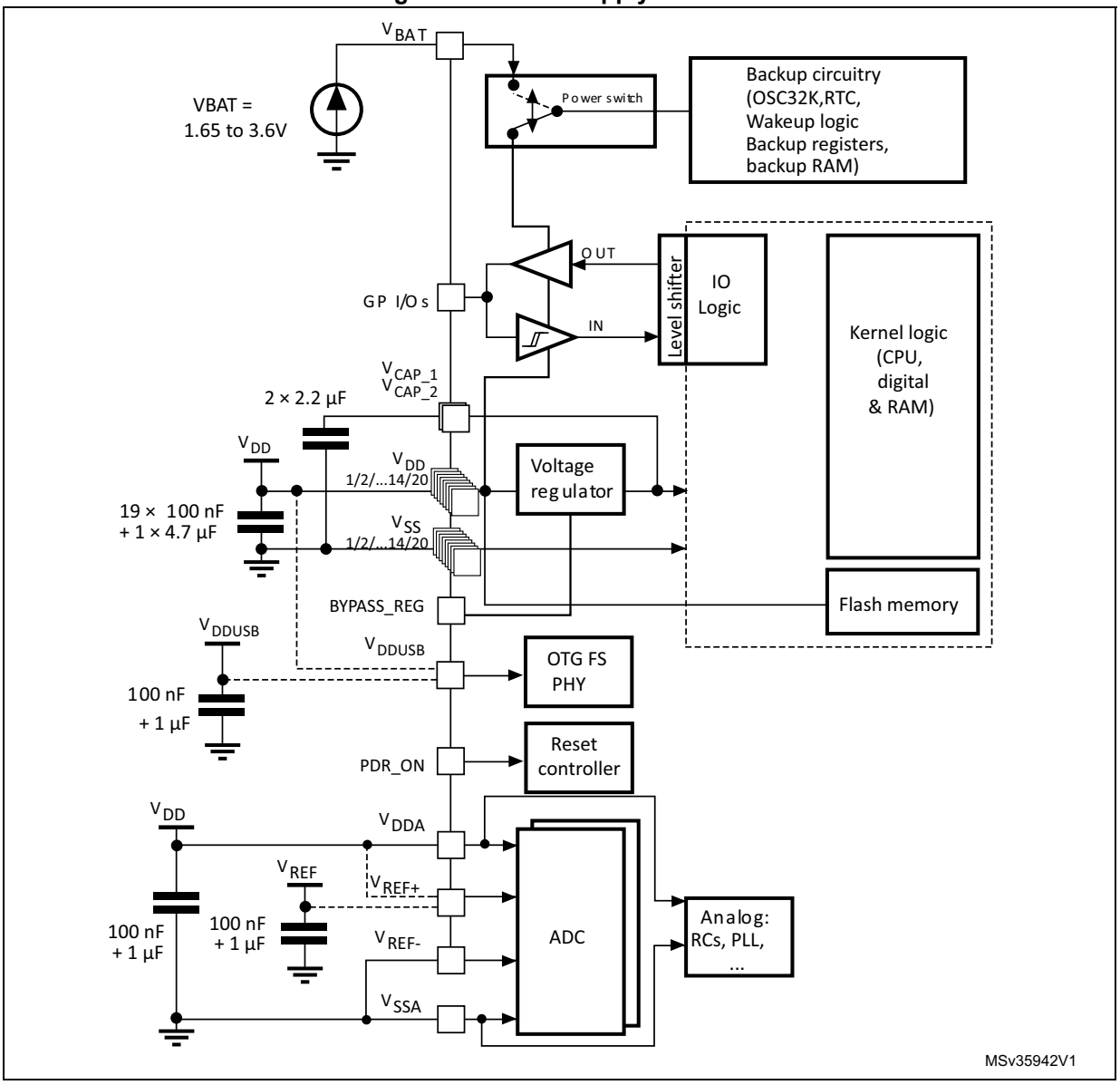

1. To connect BYPASS_REG and PDR_ON pins, refer to *Section 2.17: Power supply supervisor* and *Section 2.18: Voltage regulator*
2. The two 2.2 µF ceramic capacitors should be replaced by two 100 nF decoupling capacitors when the voltage regulator is OFF.
3. The 4.7 µF ceramic capacitor must be connected to one of the V_{DD} pin.
4. V_{DDA}=V_{DD} and V_{SSA}=V_{SS}.

Caution: Each power supply pair (V_{DD}/V_{SS}, V_{DDA}/V_{SSA} ...) must be decoupled with filtering ceramic capacitors as shown above. These capacitors must be placed as close as possible to, or below, the appropriate pins on the underside of the PCB to ensure good operation of the device. It is not recommended to remove filtering capacitors to reduce PCB size or cost. This might cause incorrect operation of the device.

5.1.7 Current consumption measurement

Figure 23. Current consumption measurement scheme

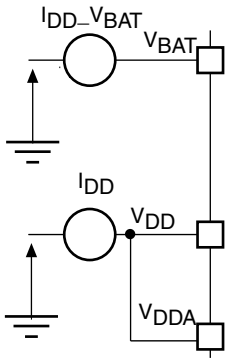

5.2 Absolute maximum ratings

Stresses above the absolute maximum ratings listed in *Table 14: Voltage characteristics*, *Table 15: Current characteristics*, and *Table 16: Thermal characteristics* may cause permanent damage to the device. These are stress ratings only and functional operation of the device at these conditions is not implied. Exposure to maximum rating conditions for extended periods may affect device reliability.

Table 14. Voltage characteristics

Symbol	Ratings	Min	Max	Unit
$V_{DD}–V_{SS}$	External main supply voltage (including V_{DDA}, V_{DD}, V_{BAT} and V_{DDUSB}) (1)	− 0.3	4.0	V
V_{IN}	Input voltage on FT pins(2)	V_{SS} − 0.3	V_{DD}+4.0	
	Input voltage on TTa pins	V_{SS} − 0.3	4.0	
	Input voltage on any other pin	V_{SS} − 0.3	4.0	
	Input voltage on BOOT pin	V_{SS}	9.0	
$\|\Delta V_{DDx}\|$	Variations between different V_{DD} power pins	-	50	mV
$\|V_{SSX} - V_{SS}\|$	Variations between all the different ground pins(3)	-	50	
$V_{ESD(HBM)}$	Electrostatic discharge voltage (human body model)	see *Section 5.3.15: Absolute maximum ratings (electrical sensitivity)*		-

1. All main power (V_{DD}, V_{DDA}, V_{DDUSB}) and ground (V_{SS}, V_{SSA}) pins must always be connected to the external power supply, in the permitted range.
2. V_{IN} maximum value must always be respected. Refer to *Table 15* for the values of the maximum allowed injected current.
3. Include VREF- pin.

Table 15. Current characteristics

Symbol	Ratings	Max.	Unit
ΣI_{VDD}	Total current into sum of all V_{DD_x} power lines (source)(1)	320	mA
ΣI_{VSS}	Total current out of sum of all V_{SS_x} ground lines (sink)(1)	− 320	
ΣI_{VDDUSB}	Total current into V_{DDUSB} power line (source)	25	
I_{VDD}	Maximum current into each V_{DD_x} power line (source)(1)	100	
I_{VSS}	Maximum current out of each V_{SS_x} ground line (sink)(1)	− 100	
I_{IO}	Output current sunk by any I/O and control pin	25	
	Output current sourced by any I/Os and control pin	− 25	
ΣI_{IO}	Total output current sunk by sum of all I/O and control pins (2)	120	
	Total output current sunk by sum of all USB I/Os	25	
	Total output current sourced by sum of all I/Os and control pins(2)	− 120	
$I_{INJ(PIN)}$	Injected current on FT, FTf, RST and B pins (3)	− 5/+0	
	Injected current on TTa pins(4)	±5	
$\Sigma I_{INJ(PIN)}$(4)	Total injected current (sum of all I/O and control pins)(5)	±25	

1. All main power (V_{DD}, V_{DDA}) and ground (V_{SS}, V_{SSA}) pins must always be connected to the external power supply, in the permitted range.
2. This current consumption must be correctly distributed over all I/Os and control pins. The total output current must not be sunk/sourced between two consecutive power supply pins referring to high pin count LQFP packages.
3. Positive injection is not possible on these I/Os and does not occur for input voltages lower than the specified maximum value.
4. A positive injection is induced by $V_{IN}>V_{DDA}$ while a negative injection is induced by $V_{IN}<V_{SS}$. $I_{INJ(PIN)}$ must never be exceeded. Refer to *Table 14: Voltage characteristics* for the values of the maximum allowed input voltage.
5. When several inputs are submitted to a current injection, the maximum $\Sigma I_{INJ(PIN)}$ is the absolute sum of the positive and negative injected currents (instantaneous values).

Table 16. Thermal characteristics

Symbol	Ratings	Value	Unit
T_{STG}	Storage temperature range	− 65 to +150	°C
T_J	Maximum junction temperature	125	

5.3 Operating conditions

5.3.1 General operating conditions

Table 17. General operating conditions

Symbol	Parameter	Conditions[1]		Min	Typ	Max	Unit
f_{HCLK}	Internal AHB clock frequency	Power Scale 3 (VOS[1:0] bits in PWR_CR register = 0x01), Regulator ON, over-drive OFF		0	-	144	MHz
		Power Scale 2 (VOS[1:0] bits in PWR_CR register = 0x10), Regulator ON	Over-drive OFF	0	-	168	
			Over-drive ON		-	180	
		Power Scale 1 (VOS[1:0] bits in PWR_CR register= 0x11), Regulator ON	Over-drive OFF	0	-	180	
			Over-drive ON		-	216[2]	
f_{PCLK1}	Internal APB1 clock frequency	Over-drive OFF		0	-	45	
		Over-drive ON		0	-	54	
f_{PCLK2}	Internal APB2 clock frequency	Over-drive OFF		0	-	90	
		Over-drive ON		0	-	108	
V_{DD}	Standard operating voltage	-		1.7[3]	-	3.6	V
V_{DDA}[4][5]	Analog operating voltage (ADC limited to 1.2 M samples)	Must be the same potential as V_{DD}[6]		1.7[3]	-	2.4	
	Analog operating voltage (ADC limited to 2.4 M samples)			2.4	-	3.6	
V_{DDUSB}	USB supply voltage (supply voltage for PA11,PA12, PB14 and PB15 pins)	USB not used		1.7	3.3	3.6	
		USB used		3.0	-	3.6	
V_{BAT}	Backup operating voltage	-		1.65	-	3.6	

Table 17. General operating conditions (continued)

Symbol	Parameter	Conditions[1]	Min	Typ	Max	Unit
V_{12}	Regulator ON: 1.2 V internal voltage on V_{CAP_1}/V_{CAP_2} pins	Power Scale 3 ((VOS[1:0] bits in PWR_CR register = 0x01), 144 MHz HCLK max frequency	1.08	1.14	1.20	V
		Power Scale 2 ((VOS[1:0] bits in PWR_CR register = 0x10), 168 MHz HCLK max frequency with over-drive OFF or 180 MHz with over-drive ON	1.20	1.26	1.32	
		Power Scale 1 ((VOS[1:0] bits in PWR_CR register = 0x11), 180 MHz HCLK max frequency with over-drive OFF or 216 MHz with over-drive ON	1.26	1.32	1.40	
	Regulator OFF: 1.2 V external voltage must be supplied from external regulator on V_{CAP_1}/V_{CAP_2} pins[7]	Max frequency 144 MHz	1.10	1.14	1.20	
		Max frequency 168MHz	1.20	1.26	1.32	
		Max frequency 180 MHz	1.26	1.32	1.38	
V_{IN}	Input voltage on RST and FT pins[8]	2 V ≤V_{DD} ≤3.6 V	− 0.3	-	5.5	
		V_{DD} ≤2 V	− 0.3	-	5.2	
	Input voltage on TTa pins	-	− 0.3	-	V_{DDA}+ 0.3	
	Input voltage on BOOT pin	-	0	-	9	
P_D	Power dissipation at T_A = 85 °C for suffix 6 or T_A = 105 °C for suffix 7[9]	LQFP100	-	-	465	mW
		TFBGA100	-	-	351	
		WLCSP143	-	-	641	
		LQFP144	-	-	500	
		LQFP176	-	-	526	
		UFBGA176	-	-	513	
		LQFP208	-	-	1053	
		TFBGA216	-	-	690	
T_A	Ambient temperature for 6 suffix version	Maximum power dissipation	− 40	-	85	°C
		Low power dissipation[10]	− 40	-	105	
	Ambient temperature for 7 suffix version	Maximum power dissipation	− 40	-	105	°C
		Low power dissipation[10]	− 40	-	125	
T_J	Junction temperature range	6 suffix version	− 40	-	105	°C
		7 suffix version	− 40	-	125	

1. The over-drive mode is not supported at the voltage ranges from 1.7 to 2.1 V.
2. 216 MHz maximum frequency for 6 suffix version (200 MHz maximum frequency for 7 suffix version).
3. V_{DD}/V_{DDA} minimum value of 1.7 V is obtained with the use of an external power supply supervisor (refer to *Section 2.17.2: Internal reset OFF*).
4. When the ADC is used, refer to *Table 62: ADC characteristics*.
5. If V_{REF+} pin is present, it must respect the following condition: V_{DDA}-V_{REF+} < 1.2 V.

6. It is recommended to power V_{DD} and V_{DDA} from the same source. A maximum difference of 300 mV between V_{DD} and V_{DDA} can be tolerated during power-up and power-down operation.
7. The over-drive mode is not supported when the internal regulator is OFF.
8. To sustain a voltage higher than VDD+0.3, the internal Pull-up and Pull-Down resistors must be disabled
9. If T_A is lower, higher P_D values are allowed as long as T_J does not exceed T_{Jmax}.
10. In low power dissipation state, T_A can be extended to this range as long as T_J does not exceed T_{Jmax}.

Table 18. Limitations depending on the operating power supply range

Operating power supply range	ADC operation	Maximum Flash memory access frequency with no wait states ($f_{Flashmax}$)	Maximum HCLK frequency vs Flash memory wait states (1)(2)	I/O operation	Possible Flash memory operations
V_{DD} =1.7 to 2.1 V(3)	Conversion time up to 1.2 Msps	20 MHz	180 MHz with 8 wait states and over-drive OFF	No I/O compensation	8-bit erase and program operations only
V_{DD} = 2.1 to 2.4 V	Conversion time up to 1.2 Msps	22 MHz	216 MHz with 9 wait states and over-drive ON	No I/O compensation	16-bit erase and program operations
V_{DD} = 2.4 to 2.7 V	Conversion time up to 2.4 Msps	24 MHz	216 MHz with 8 wait states and over-drive ON	I/O compensation works	16-bit erase and program operations
V_{DD} = 2.7 to 3.6 V(4)	Conversion time up to 2.4 Msps	30 MHz	216 MHz with 7 wait states and over-drive ON	I/O compensation works	32-bit erase and program operations

1. Applicable only when the code is executed from Flash memory. When the code is executed from RAM, no wait state is required.
2. Thanks to the ART accelerator on ITCM interface and L1-cache on AXI interface, the number of wait states given here does not impact the execution speed from Flash memory since the ART accelerator or L1-cache allows to achieve a performance equivalent to 0-wait state program execution.
3. V_{DD}/V_{DDA} minimum value of 1.7 V is obtained with the use of an external power supply supervisor (refer to *Section 2.17.2: Internal reset OFF*).
4. The voltage range for USB full speed PHYs can drop down to 2.7 V. However the electrical characteristics of D- and D+ pins will be degraded between 2.7 and 3 V.

5.3.2 VCAP1/VCAP2 external capacitor

Stabilization for the main regulator is achieved by connecting an external capacitor C_{EXT} to the VCAP1/VCAP2 pins. C_{EXT} is specified in *Table 19*.

Figure 24. External capacitor C_{EXT}

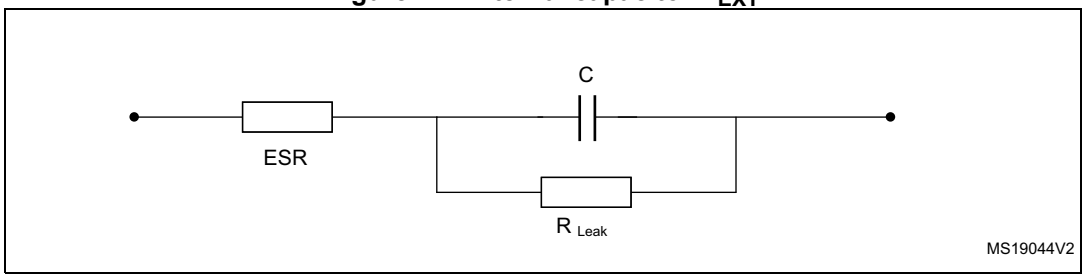

1. Legend: ESR is the equivalent series resistance.

Table 19. VCAP1/VCAP2 operating conditions(1)

Symbol	Parameter	Conditions
CEXT	Capacitance of external capacitor	2.2 µF
ESR	ESR of external capacitor	< 2 Ω

1. When bypassing the voltage regulator, the two 2.2 µF V_{CAP} capacitors are not required and should be replaced by two 100 nF decoupling capacitors.

5.3.3 Operating conditions at power-up / power-down (regulator ON)

Subject to general operating conditions for T_A.

Table 20. Operating conditions at power-up / power-down (regulator ON)

Symbol	Parameter	Min	Max	Unit
t_{VDD}	V_{DD} rise time rate	20	∞	µs/V
	V_{DD} fall time rate	20	∞	

5.3.4 Operating conditions at power-up / power-down (regulator OFF)

Subject to general operating conditions for T_A.

Table 21. Operating conditions at power-up / power-down (regulator OFF)(1)

Symbol	Parameter	Conditions	Min	Max	Unit
t_{VDD}	V_{DD} rise time rate	Power-up	20	∞	µs/V
	V_{DD} fall time rate	Power-down	20	∞	
t_{VCAP}	V_{CAP_1} and V_{CAP_2} rise time rate	Power-up	20	∞	
	V_{CAP_1} and V_{CAP_2} fall time rate	Power-down	20	∞	

1. To reset the internal logic at power-down, a reset must be applied on pin PA0 when V_{DD} reach below 1.08 V.

5.3.5 Reset and power control block characteristics

The parameters given in *Table 22* are derived from tests performed under ambient temperature and V_{DD} supply voltage conditions summarized in *Table 17*.

Table 22. reset and power control block characteristics

Symbol	Parameter	Conditions	Min	Typ	Max	Unit
V_{PVD}	Programmable voltage detector level selection	PLS[2:0]=000 (rising edge)	2.09	2.14	2.19	V
		PLS[2:0]=000 (falling edge)	1.98	2.04	2.08	V
		PLS[2:0]=001 (rising edge)	2.23	2.30	2.37	V
		PLS[2:0]=001 (falling edge)	2.13	2.19	2.25	V
		PLS[2:0]=010 (rising edge)	2.39	2.45	2.51	V
		PLS[2:0]=010 (falling edge)	2.29	2.35	2.39	V
		PLS[2:0]=011 (rising edge)	2.54	2.60	2.65	V
		PLS[2:0]=011 (falling edge)	2.44	2.51	2.56	V
		PLS[2:0]=100 (rising edge)	2.70	2.76	2.82	V
		PLS[2:0]=100 (falling edge)	2.59	2.66	2.71	V
		PLS[2:0]=101 (rising edge)	2.86	2.93	2.99	V
		PLS[2:0]=101 (falling edge)	2.65	2.84	2.92	V
		PLS[2:0]=110 (rising edge)	2.96	3.03	3.10	V
		PLS[2:0]=110 (falling edge)	2.85	2.93	2.99	V
		PLS[2:0]=111 (rising edge)	3.07	3.14	3.21	V
		PLS[2:0]=111 (falling edge)	2.95	3.03	3.09	V
$V_{PVDhyst}$(1)	PVD hysteresis	-	-	100	-	mV
$V_{POR/PDR}$	Power-on/power-down reset threshold	Falling edge	1.60	1.68	1.76	V
		Rising edge	1.64	1.72	1.80	V
$V_{PDRhyst}$(1)	PDR hysteresis	-	-	40	-	mV
V_{BOR1}	Brownout level 1 threshold	Falling edge	2.13	2.19	2.24	V
		Rising edge	2.23	2.29	2.33	V
V_{BOR2}	Brownout level 2 threshold	Falling edge	2.44	2.50	2.56	V
		Rising edge	2.53	2.59	2.63	V
V_{BOR3}	Brownout level 3 threshold	Falling edge	2.75	2.83	2.88	V
		Rising edge	2.85	2.92	2.97	V
$V_{BORhyst}$(1)	BOR hysteresis	-	-	100	-	mV
$T_{RSTTEMPO}$(1)(2)	POR reset temporization	-	0.5	1.5	3.0	ms
I_{RUSH}(1)	InRush current on voltage regulator power-on (POR or wakeup from Standby)	-	-	160	250	mA
E_{RUSH}(1)	InRush energy on voltage regulator power-on (POR or wakeup from Standby)	V_{DD} = 1.7 V, T_A = 105 °C, I_{RUSH} = 171 mA for 31 µs	-	-	5.4	µC

1. Guaranteed by design.
2. The reset temporization is measured from the power-on (POR reset or wakeup from V_{BAT}) to the instant when first instruction is read by the user application code.

5.3.6 Over-drive switching characteristics

When the over-drive mode switches from enabled to disabled or disabled to enabled, the system clock is stalled during the internal voltage set-up.

The over-drive switching characteristics are given in *Table 23*. They are sbject to general operating conditions for T_A.

Table 23. Over-drive switching characteristics(1)

Symbol	Parameter	Conditions	Min	Typ	Max	Unit
Tod_swen	Over_drive switch enable time	HSI	-	45	-	µs
		HSE max for 4 MHz and min for 26 MHz	45	-	100	
		External HSE 50 MHz	-	40	-	
Tod_swdis	Over_drive switch disable time	HSI	-	20	-	
		HSE max for 4 MHz and min for 26 MHz.	20	-	80	
		External HSE 50 MHz	-	15	-	

1. Guaranteed by design.

5.3.7 Supply current characteristics

The current consumption is a function of several parameters and factors such as the operating voltage, ambient temperature, I/O pin loading, device software configuration, operating frequencies, I/O pin switching rate, program location in memory and executed binary code.

The current consumption is measured as described in *Figure 23: Current consumption measurement scheme*.

All the run-mode current consumption measurements given in this section are performed with a reduced code that gives a consumption equivalent to CoreMark code.

Typical and maximum current consumption

The MCU is placed under the following conditions:

- All I/O pins are in input mode with a static value at V_{DD} or V_{SS} (no load).
- All peripherals are disabled except if it is explicitly mentioned.
- The Flash memory access time is adjusted both to f_{HCLK} frequency and V_{DD} range (see *Table 18: Limitations depending on the operating power supply range*).
- When the regulator is ON, the voltage scaling and over-drive mode are adjusted to f_{HCLK} frequency as follows:
  - Scale 3 for $f_{HCLK} \leq 144$ MHz
  - Scale 2 for 144 MHz < $f_{HCLK} \leq 168$ MHz
  - Scale 1 for 168 MHz < $f_{HCLK} \leq 216$ MHz. The over-drive is only ON at 216 MHz.
- When the regulator is OFF, the V12 is provided externally as described in *Table 17: General operating conditions*:
- The system clock is HCLK, $f_{PCLK1} = f_{HCLK}/4$, and $f_{PCLK2} = f_{HCLK}/2$.
- External clock frequency is 25 MHz and PLL is ON when f_{HCLK} is higher than 25 MHz.
- The typical current consumption values are obtained for 1.7 V ≤ V_{DD} ≤ 3.6 V voltage range and for T_A= 25 °C unless otherwise specified.
- The maximum values are obtained for 1.7 V ≤ V_{DD} ≤ 3.6 V voltage range and a maximum ambient temperature (T_A) unless otherwise specified.
- For the voltage range 1.7 V ≤ V_{DD} ≤ 3.6 V, the maximum frequency is 180 MHz.

Table 24. Typical and maximum current consumption in Run mode, code with data processing running from ITCM RAM, regulator ON

Symbol	Parameter	Conditions	f_{HCLK} (MHz)	Typ	Max(1)			Unit
					T_A = 25 °C	T_A = 85 °C	T_A = 105 °C	
I_{DD}	Supply current in RUN mode	All peripherals enabled(2)(3)	216	178	208(4)	230(4)	-	mA
			200	165	193	212	230	
			180	147	171(4)	185(4)	198(4)	
			168	130	152	164	177	
			144	100	116	127	137	
			60	44	52	63	73	
			25	21	25	36	46	
		All peripherals disabled(3)	216	102	120(4)	141(4)	-	
			200	95	111	131	149	
			180	84	98(4)	112(4)	125(4)	
			168	75	87	100	112	
			144	58	67	77	88	
			60	25	30	41	51	
			25	12	15	25	36	

1. Guaranteed by characterization results.

2. When analog peripheral blocks such as ADCs, DACs, HSE, LSE, HSI, or LSI are ON, an additional power consumption should be considered.
3. When the ADC is ON (ADON bit set in the ADC_CR2 register), add an additional power consumption of 1.73 mA per ADC for the analog part.
4. Guaranteed by test in production.

Table 25. Typical and maximum current consumption in Run mode, code with data processing running from Flash memory (ART ON except prefetch / L1-cache ON) or SRAM on AXI (L1-cache ON), regulator ON

Symbol	Parameter	Conditions	f_{HCLK} (MHz)	Typ	Max(1)			Unit
					T_A = 25 °C	T_A = 85 °C	T_A = 105 °C	
I_{DD}	Supply current in RUN mode	All peripherals enabled(2)(3)	216	186	213	234	-	mA
			200	172	197	217	235	
			180	152	175	189	202	
			168	135	155	168	180	
			144	104	119	130	140	
			60	46	53	64	74	
			25	22	25	36	47	
		All peripherals disabled(3)	216	108	124	146	-	
			200	100	115	135	154	
			180	89	102	116	129	
			168	79	90	103	115	
			144	61	69	80	90	
			60	27	31	42	52	
			25	12	15	26	36	

1. Guaranteed by characterization results.
2. When analog peripheral blocks such as ADCs, DACs, HSE, LSE, HSI, or LSI are ON, an additional power consumption should be considered.
3. When the ADC is ON (ADON bit set in the ADC_CR2 register), add an additional power consumption of 1.73 mA per ADC for the analog part.

Table 26. Typical and maximum current consumption in Run mode, code with data processing running from Flash memory or SRAM on AXI (L1-cache disabled), regulator ON

Symbol	Parameter	Conditions	f_{HCLK} (MHz)	Typ	Max(1)			Unit
					TA= 25 °C	TA=85 °C	TA=105 °C	
I_{DD}	Supply current in RUN mode	All peripherals enabled(2)(3)	216	181	210	233	-	mA
			200	168	194	216	234	
			180	153	176	192	206	
			168	136	157	172	184	
			144	109	125	137	148	
			60	53	61	73	84	
			25	26	30	41	52	
		All peripherals disabled(3)	216	105	121	145	-	
			200	98	112	134	153	
			180	90	103	119	132	
			168	81	93	107	120	
			144	67	76	88	89	
			60	34	40	51	62	
			25	17	20	31	42	

1. Guaranteed by characterization results.
2. When analog peripheral blocks such as ADCs, DACs, HSE, LSE, HSI, or LSI are ON, an additional power consumption should be considered.
3. When the ADC is ON (ADON bit set in the ADC_CR2 register), add an additional power consumption of 1.73 mA per ADC for the analog part.

Table 27. Typical and maximum current consumption in Run mode, code with data processing running from Flash memory on ITCM interface (ART disabled), regulator ON

Symbol	Parameter	Conditions	f_{HCLK} (MHz)	Typ	Max(1)			Unit
					TA= 25 °C	TA=85 °C	TA=105 °C	
I_{DD}	Supply current in RUN mode	All peripherals enabled(2)(3)	216	205	237	261	-	mA
			200	191	219	241	260	
			180	176	202	218	232	
			168	158	181	196	209	
			144	130	148	161	172	
			60	58	67	79	89	
			25	27	32	43	54	
		All peripherals disabled(3)	216	130	149	173	-	
			200	121	138	160	179	
			180	113	129	145	159	
			168	102	116	131	144	
			144	88	100	112	123	
			60	40	45	57	68	
			25	19	22	33	44	

1. Guaranteed by characterization results.
2. When analog peripheral blocks such as ADCs, DACs, HSE, LSE, HSI, or LSI are ON, an additional power consumption should be considered.
3. When the ADC is ON (ADON bit set in the ADC_CR2 register), add an additional power consumption of 1.73 mA per ADC for the analog part.

Table 28. Typical and maximum current consumption in Run mode, code with data processing running from Flash memory (ART ON except prefetch / L1-cache ON) or SRAM on AXI (L1-cache ON), regulator OFF

Symbol	Parameter	Conditions	f_{HCLK} (MHz)	Typ		Max(1)						Unit
						TA= 25 °C		TA= 85 °C		TA= 105 °C		
				IDD12	IDD	IDD12	IDD	IDD12	IDD	IDD12	IDD	
IDD12/ IDD	Supply current in RUN mode from V12 and VDD supply	All Peripherals Enabled(2)(3)	180	151	1	174	2	190	2	204	2	mA
			168	135	1	156	2	170	2	182	2	
			144	108	1	124	2	136	2	146	2	
			60	52	1	60	2	71	2	82	2	
			25	25	1	29	2	40	2	50	2	
		All Peripherals Disabled(3)	180	89	1	102	2	117	2	130	2	
			168	80	1	91	2	105	2	118	2	
			144	66	1	75	2	86	2	97	2	
			60	33	1	38	2	49	2	60	2	
			25	16	1	18	2	29	2	40	2	

1. Guaranteed by characterization results.
2. When analog peripheral blocks such as ADCs, DACs, HSE, LSE, HSI, or LSI are ON, an additional power consumption should be considered.
3. When the ADC is ON (ADON bit set in the ADC_CR2 register), add an additional power consumption of 1.73 mA per ADC for the analog part.

Table 29. Typical and maximum current consumption in Sleep mode, regulator ON

Symbol	Parameter	Conditions	f_{HCLK} (MHz)	Typ	Max(1)			Unit
					T_A = 25 °C	T_A = 85 °C	T_A = 105 °C	
I_{DD}	Supply current in Sleep mode	All peripherals enabled(2)	216	116	137(3)	159(3)	-	mA
			200	108	127	147	166	
			180	95	112(3)	126(3)	140(3)	
			168	85	99	112	125	
			144	65	76	87	98	
			60	30	35	46	57	
			25	15	18	29	39	
		All peripherals disabled	216	35	46(3)	71(3)	-	
			200	32	43	66	86	
			180	28	38(3)	53(3)	70(3)	
			168	25	33	47	61	
			144	20	26	37	50	
			60	10	14	26	36	
			25	5	8	20	31	

1. Guaranteed by characterization results.
2. When analog peripheral blocks such as ADCs, DACs, HSE, LSE, HSI, or LSI are ON, an additional power consumption should be considered.
3. Guaranteed by test in production.

Table 30. Typical and maximum current consumption in Sleep mode, regulator OFF

Symbol	Parameter	Conditions	f_{HCLK} (MHz)	Typ		Max(1)						Unit
						TA= 25 °C		TA= 85 °C		TA= 105 °C		
				IDD12	IDD	IDD12	IDD	IDD12	IDD	IDD12	IDD	
IDD12/ IDD	Supply current in RUN mode from V12 and V_{DD} supply	All Peripherals Enabled(2)	180	94	1	110	2	125	2	138	2	mA
			168	83	1	96	2	111	2	123	2	
			144	64	1	74	2	85	2	96	2	
			60	29	1	34	2	44	2	55	2	
			25	14	1	16	2	27	2	37	2	
		All Peripherals Disabled	180	27	1	36	2	51	2	68	2	
			168	24	1	31	2	45	2	59	2	
			144	18	1	24	2	35	2	48	2	
			60	9	1	12	2	24	2	34	2	
			25	4	1	6	2	18	2	29	2	

1. Guaranteed by characterization results.

2. When analog peripheral blocks such as ADCs, DACs, HSE, LSE, HSI, or LSI are ON, an additional power consumption should be considered.

Table 31. Typical and maximum current consumptions in Stop mode

Symbol	Parameter	Conditions	Typ	Max(1)			Unit
				V_{DD} = 3.6 V			
			T_A = 25 °C	T_A = 25 °C	T_A = 85 °C	T_A = 105 °C	
$I_{DD_STOP_NM}$ (normal mode)	Supply current in Stop mode, main regulator in Run mode	Flash memory in Stop mode, all oscillators OFF, no IWDG	0.45	2.00	14.00	22.00	mA
		Flash memory in Deep power down mode, all oscillators OFF	0.40	2.00	14.00	22.00	
	Supply current in Stop mode, main regulator in Low-power mode	Flash memory in Stop mode, all oscillators OFF, no IWDG	0.32	1.50	10.00	18.00	
		Flash memory in Deep power down mode, all oscillators OFF, no IWDG	0.27	1.50	10.00	18.00	
$I_{DD_STOP_UDM}$ (under-drive mode)	Supply current in Stop mode, main regulator in Low voltage and under-drive modes	Regulator in Run mode, Flash memory in Deep power down mode, all oscillators OFF, no IWDG	0.15	0.80	4.00	7.00	
		Regulator in Low-power mode, Flash memory in Deep power down mode, all oscillators OFF, no IWDG	0.10	0.70	4.00	7.00	

1. Data based on characterization, tested in production.

Table 32. Typical and maximum current consumptions in Standby mode

Symbol	Parameter	Conditions	Typ(1)			Max(2)			Unit
			T_A = 25 °C			T_A = 25 °C	T_A = 85 °C	T_A = 105 °C	
			V_{DD} = 1.7 V	V_{DD}= 2.4 V	V_{DD} = 3.3 V	V_{DD} = 3.3 V			
I_{DD_STBY}	Supply current in Standby mode	Backup SRAM OFF, RTC and LSE OFF	1.7	1.9	2.3	5(3)	15(3)	31(3)	µA
		Backup SRAM ON, RTC and LSE OFF	2.4	2.6	3.0	6(3)	20(3)	40(3)	
		Backup SRAM OFF, RTC ON and LSE in low drive mode	2.1	2.4	2.9	6	19	39	
		Backup SRAM OFF, RTC ON and LSE in medium low drive mode	2.1	2.4	2.9	6	19	39	
		Backup SRAM OFF, RTC ON and LSE in medium high drive mode	2.2	2.5	3.0	7	20	40	
		Backup SRAM OFF, RTC ON and LSE in high drive mode	2.3	2.6	3.1	7	20	42	
		Backup SRAM ON, RTC ON and LSE in low drive mode	2.7	3.0	3.6	8	23	49	
		Backup SRAM ON, RTC ON and LSE in Medium low drive mode	2.7	3.0	3.6	8	23	49	
		Backup SRAM ON, RTC ON and LSE in Medium high drive mode	2.8	3.1	3.7	8	24	50	
		Backup SRAM ON, RTC ON and LSE in High drive mode	2.9	3.2	3.8	8	25	51	

1. PDR is OFF for V_{DD}=1.7V. When the PDR is OFF (internal reset OFF), the typical current consumption is reduced by additional 1.2 µA.
2. Guaranteed by characterization results.
3. Based on characterization, tested in production.

Table 33. Typical and maximum current consumptions in V_{BAT} mode

Symbol	Parameter	Conditions[1]	Typ			Max[2]		Unit
			T_A =25 °C			T_A =85 °C	T_A =105 °C	
			V_{BAT} = 1.7 V	V_{BAT}= 2.4 V	V_{BAT}= 3.3 V	V_{BAT} = 3.6 V		
I_{DD_VBAT}	Supply current in V_{BAT} mode	Backup SRAM OFF, RTC and LSE OFF	0.03	0.03	0.04	0.2	0.4	µA
		Backup SRAM ON, RTC and LSE OFF	0.74	0.75	0.78	3.0	7.0	
		Backup SRAM OFF, RTC ON and LSE in low drive mode	0.40	0.52	0.72	2.8	6.5	
		Backup SRAM OFF, RTC ON and LSE in medium low drive mode	0.40	0.52	0.72	2.8	6.5	
		Backup SRAM OFF, RTC ON and LSE in medium high drive mode	0.54	0.64	0.85	3.3	7.6	
		Backup SRAM OFF, RTC ON and LSE in high drive mode	0.62	0.73	0.94	3.6	8.4	
		Backup SRAM ON, RTC ON and LSE in low drive mode	1.06	1.18	1.41	5.4	12.7	
		Backup SRAM ON, RTC ON and LSE in Medium low drive mode	1.16	1.28	1.51	5.8	13.6	
		Backup SRAM ON, RTC ON and LSE in Medium high drive mode	1.18	1.3	1.54	5.9	13.8	
		Backup SRAM ON, RTC ON and LSE in High drive mode	1.36	1.48	1.73	6.7	15.5	

1. Crystal used: Abracon ABS07-120-32.768 kHz-T with a C_L of 6 pF for typical values.
2. Guaranteed by characterization results.

Figure 25. Typical V_{BAT} current consumption (RTC ON/BKP SRAM OFF and LSE in low drive mode)

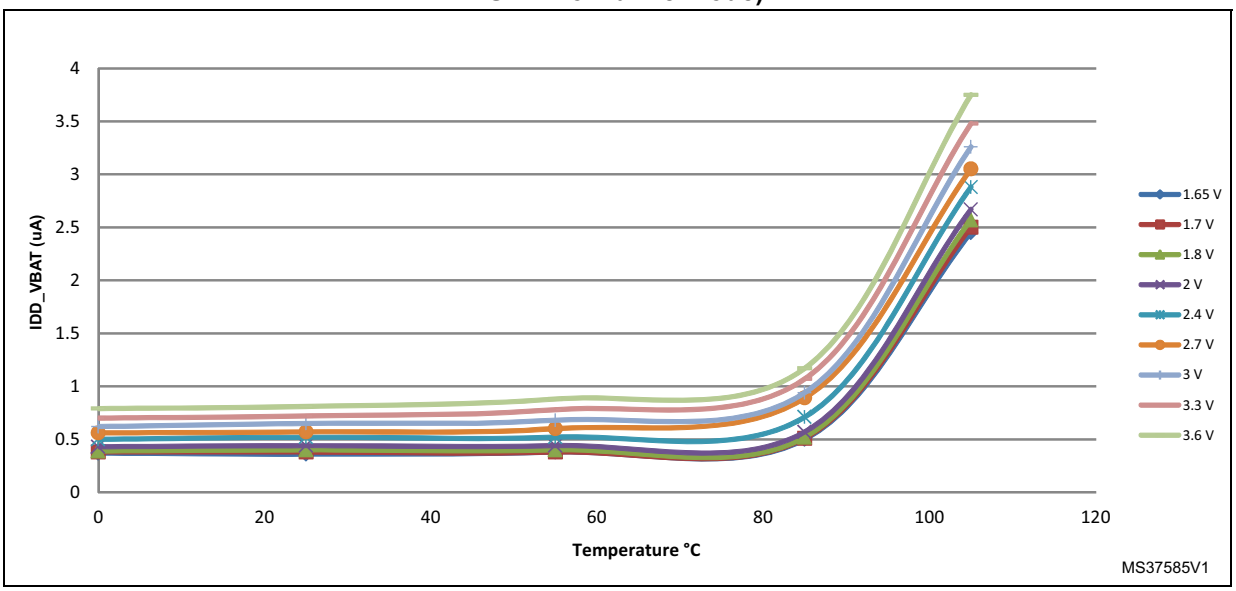

Figure 26. Typical V_{BAT} current consumption (RTC ON/BKP SRAM OFF and LSE in medium low drive mode)

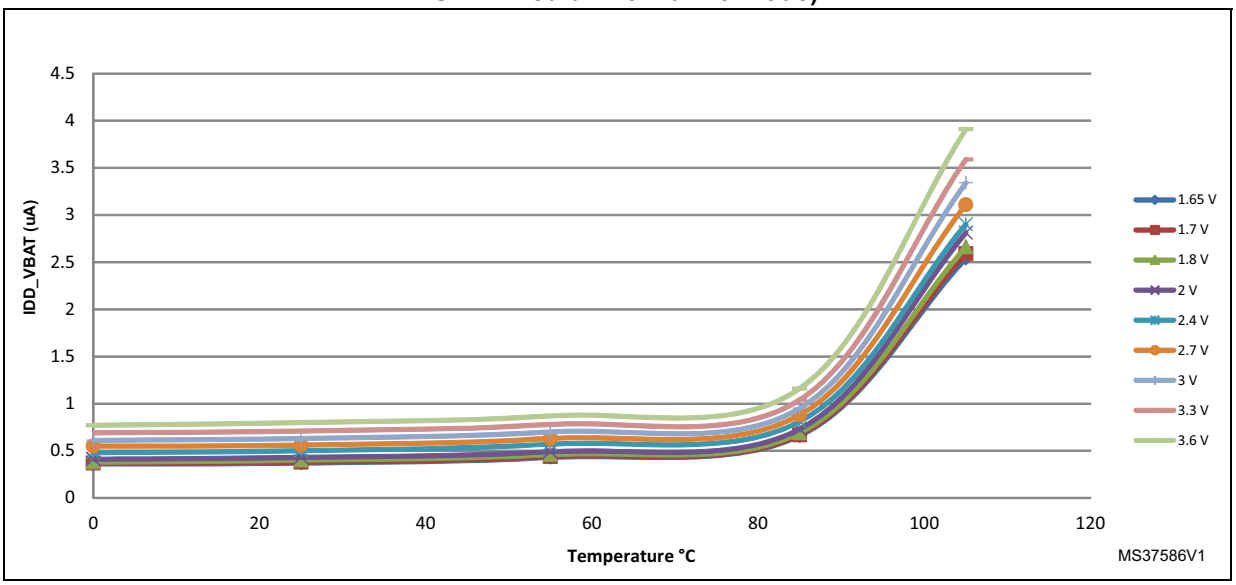

Figure 27. Typical V_{BAT} current consumption (RTC ON/BKP SRAM OFF and LSE in medium high drive mode)

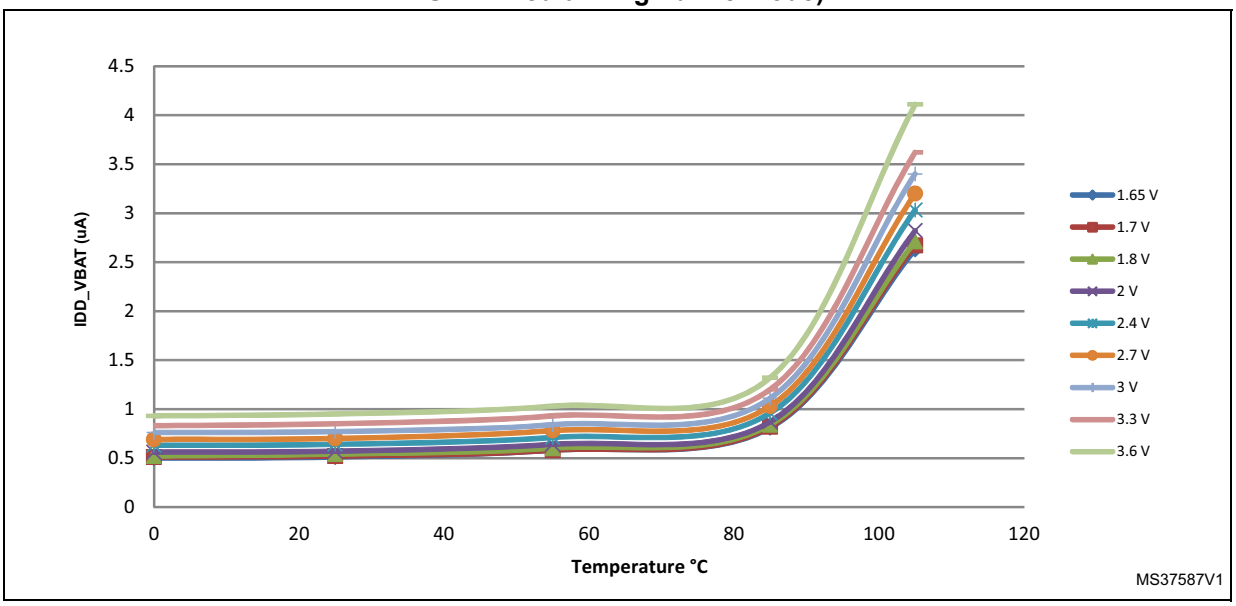

Figure 28. Typical V_{BAT} current consumption (RTC ON/BKP SRAM OFF and LSE in high drive mode)

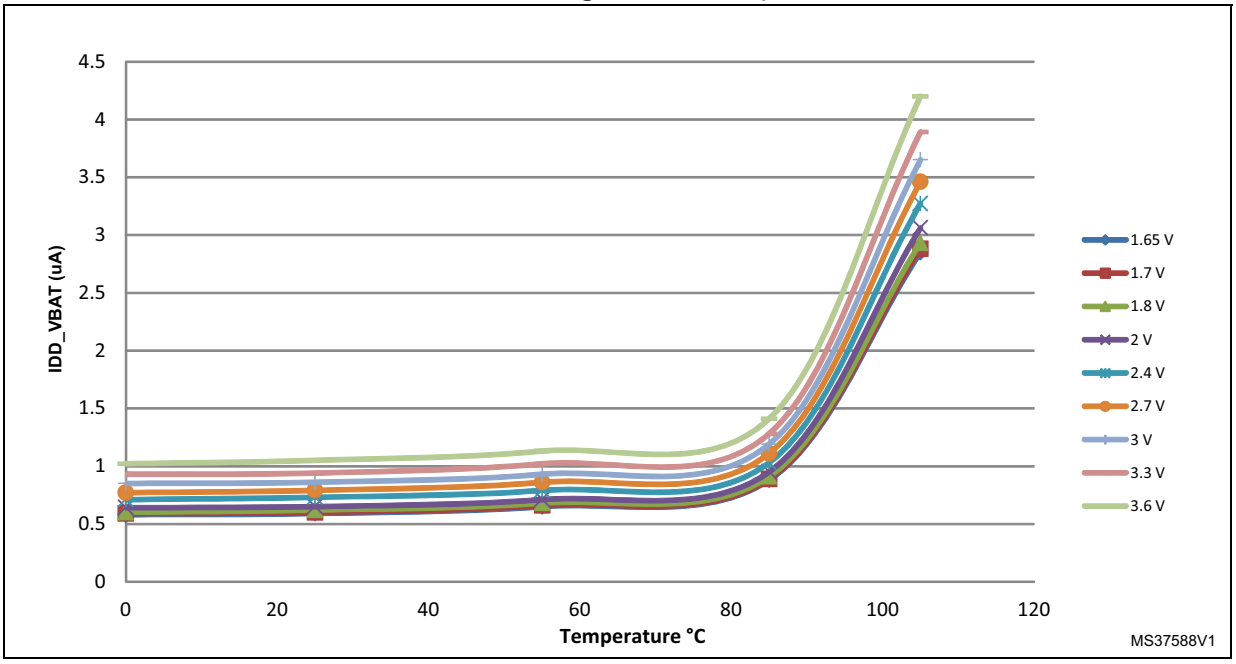

Figure 29. Typical V_{BAT} current consumption (RTC ON/BKP SRAM OFF and LSE in high medium drive mode)

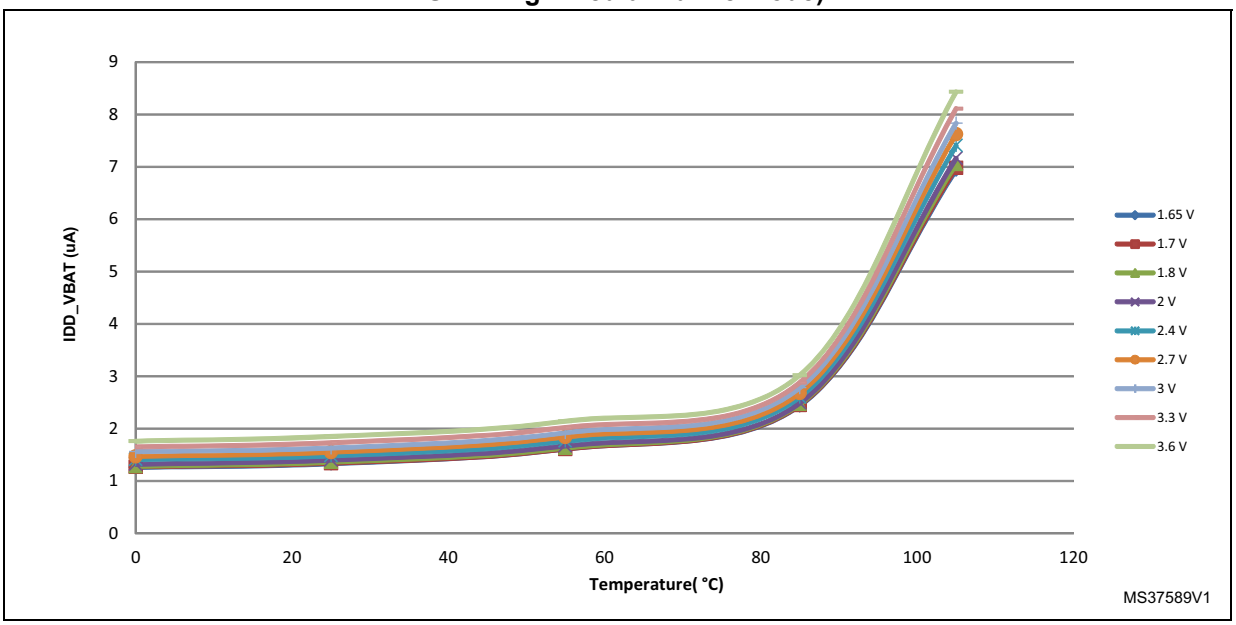

I/O system current consumption

The current consumption of the I/O system has two components: static and dynamic.

I/O static current consumption

All the I/Os used as inputs with pull-up generate current consumption when the pin is externally held low. The value of this current consumption can be simply computed by using the pull-up/pull-down resistors values given in *Table 56: I/O static characteristics*.

For the output pins, any external pull-down or external load must also be considered to estimate the current consumption.

Additional I/O current consumption is due to I/Os configured as inputs if an intermediate voltage level is externally applied. This current consumption is caused by the input Schmitt trigger circuits used to discriminate the input value. Unless this specific configuration is required by the application, this supply current consumption can be avoided by configuring these I/Os in analog mode. This is notably the case of ADC input pins which should be configured as analog inputs.

Caution: Any floating input pin can also settle to an intermediate voltage level or switch inadvertently, as a result of external electromagnetic noise. To avoid current consumption related to floating pins, they must either be configured in analog mode, or forced internally to a definite digital value. This can be done either by using pull-up/down resistors or by configuring the pins in output mode.

I/O dynamic current consumption

In addition to the internal peripheral current consumption (see *Table 35: Peripheral current consumption*), the I/Os used by an application also contribute to the current consumption. When an I/O pin switches, it uses the current from the MCU supply voltage to supply the I/O

pin circuitry and to charge/discharge the capacitive load (internal or external) connected to the pin:

$$I_{SW} = V_{DD} \times f_{SW} \times C$$

where

I_{SW} is the current sunk by a switching I/O to charge/discharge the capacitive load

V_{DD} is the MCU supply voltage

f_{SW} is the I/O switching frequency

C is the total capacitance seen by the I/O pin: $C = C_{INT} + C_{EXT}$

The test pin is configured in push-pull output mode and is toggled by software at a fixed frequency.

Table 34. Switching output I/O current consumption(1)

Symbol	Parameter	Conditions	I/O toggling frequency (fsw) MHz	Typ V_{DD} = 3.3 V	Typ V_{DD} = 1.8 V	Unit
I_{DDIO}	I/O switching Current	C_{EXT} = 0 pF $C = C_{INT} + C_S + C_{EXT}$	2	0.1	0.1	mA
			8	0.4	0.2	
			25	1.1	0.7	
			50	2.4	1.3	
			60	3.1	1.6	
			84	4.3	2.4	
			90	4.9	2.6	
			100	5.4	2.8	
			108	5.6	-	
		C_{EXT} = 10 pF $C = C_{INT} + C_S + C_{EXT}$	2	0.2	0.1	
			8	0.6	0.3	
			25	1.8	1.1	
			50	3.1	2.3	
			60	4.6	3.4	
			84	9.7	3.6	
			90	10.12	5.2	
			100	14.92	5.4	
			108	18.11	-	

Table 34. Switching output I/O current consumption(1) (continued)

Symbol	Parameter	Conditions	I/O toggling frequency (fsw) MHz	Typ V_{DD} = 3.3 V	Typ V_{DD} = 1.8 V	Unit
I_{DDIO}	I/O switching Current	C_{EXT} = 22 pF $C = C_{INT} + C_S + C_{EXT}$	2	0.3	0.1	mA
			8	1.0	0.5	
			25	3.5	1.6	
			50	5.9	4.2	
			60	10.0	4.4	
			84	19.12	5.8	
			90	19.6	-	
		C_{EXT} = 33 pF $C = C_{INT} + C_S + C_{EXT}$	2	0.3	0.2	
			8	1.3	0.7	
			25	3.5	2.3	
			50	10.26	5.19	
			60	16.53	-	

1. CINT + $C_{S,}$ PCB board capacitance including the pad pin is estimated to15 pF.

On-chip peripheral current consumption

The MCU is placed under the following conditions:

- At startup, all I/O pins are in analog input configuration.
- All peripherals are disabled unless otherwise mentioned.
- I/O compensation cell enabled.
- The ART/L1-cache is ON.
- Scale 1 mode selected, internal digital voltage V12 = 1.32 V.
- HCLK is the system clock. $f_{PCLK1} = f_{HCLK}/4$, and $f_{PCLK2} = f_{HCLK}/2$.
  The given value is calculated by measuring the difference of current consumption
  - with all peripherals clocked off
  - with only one peripheral clocked on
  - f_{HCLK} = 216 MHz (Scale 1 + over-drive ON), f_{HCLK} = 168 MHz (Scale 2), f_{HCLK} = 144 MHz (Scale 3)
- Ambient operating temperature is 25 °C and V_{DD}=3.3 V.

Table 35. Peripheral current consumption

Peripheral		I_{DD}(Typ)[1]			Unit
		Scale 1	Scale 2	Scale 3	
AHB1 (up to 216 MHz)	GPIOA	2.2	2.1	1.9	µA/MHz
	GPIOB	2.1	1.8	1.7	
	GPIOC	2.3	2.0	1.9	
	GPIOD	2.2	1.9	1.8	
	GPIOE	2.2	1.9	1.8	
	GPIOF	2.2	1.9	1.8	
	GPIOG	2.1	1.8	1.7	
	GPIOH	2.0	1.7	1.7	
	GPIOI	2.3	2.0	1.7	
	GPIOJ	2.2	1.9	1.7	
	GPIOK	2.0	1.7	1.7	
	CRC	1.0	0.9	0.8	
	BKPSRAM	0.8	0.7	0.6	
	DMA1	2.7 x N + 5.1	2.6 x N + 4.7	2.2 x N + 4	
	DMA2	2.2 x N + 4.9	2.6 x N + 4.4	2.2 x N + 4.1	
	DMA2D	87.1	82.5	69.6	
	ETH_MAC ETH_MAC_TX ETH_MAC_RX ETH_MAC_PTP	42.1	39.7	34.1	
	OTG_HS	57.5	54.4	47.6	
	OTG_HS+ULPI				
AHB2 (up to 216 MHz)	DCMI	5.1	4.7	4.0	µA/MHz
	CRYP	3.0	2.6	2.4	
	HASH	4.2	3.7	3.3	
	RNG	2.8	2.4	2.3	
	USB_OTG_FS	31.8	29.9	25.8	
AHB3 (up to 216 MHz)	FMC	18.9	17.7	15.2	µA/MHz
	QSPI	23.2	21.8	18.5	
Bus matrix[2]		21.06	20.3	17.2	µA/MHz

Table 35. Peripheral current consumption (continued)

Peripheral		I_{DD}(Typ)(1)			Unit
		Scale 1	Scale 2	Scale 3	
APB1 (up to 54 MHz)	TIM2	19.8	18.7	16.1	µA/MHz
	TIM3	16.6	15.1	13.6	
	TIM4	16.2	15.1	13.3	
	TIM5	19	17.8	15.8	
	TIM6	3	2.7	2.5	
	TIM7	3	2.7	2.5	
	TIM12	12.4	11.3	10.3	
	TIM13	6	5.3	5	
	TIM14	6	5.3	5	
	LPTIM1	9.4	8.7	8.1	
	WWDG	1.8	1.6	1.4	
	SPI2/I2S2(3)	3	2.9	2.8	
	SPI3/I2S3(3)	3.2	2.9	2.8	
	SPDIFRX	2.2	2	1.7	
	USART2	12.8	12	10.8	
	USART3	15.6	14.2	13.1	
	UART4	11.8	10.7	9.7	
	UART5	11.2	10	9.2	
	I2C1	9.8	8.7	7.8	
	I2C2	8.6	7.8	7.2	
	I2C3	8.6	7.8	7.2	
	I2C4	12	10.9	9.7	
	CAN1	6.8	6	5.6	
	CAN2	6.8	6	5.8	
	CEC	1	0.7	0.8	
	PWR	1.2	0.9	0.8	
	DAC(4)	3	2.7	2.5	
	UART7	12.4	11.6	10	
	UART8	10.4	9.3	8.6	

Table 35. Peripheral current consumption (continued)

Peripheral		I_{DD}(Typ)(1)			Unit
		Scale 1	Scale 2	Scale 3	
APB2 (up to 108 MHz)	TIM1	25.2	23.9	20.4	µA/MHz
	TIM8	25.3	24	20.4	
	USART1	10.3	9.8	8.2	
	USART6	10.1	9.7	8.1	
	ADC1(5)	4.5	4.4	3.5	
	ADC2(5)	4.5	4.4	3.5	
	ADC3(5)	4.5	4.4	3.3	
	SDMMC1	8.5	7.9	6.7	
	SPI1/I2S1(3)	3.1	3	2.5	
	SPI4	3.1	3	2.5	
	SYSCFG	1.5	1.4	1	
	TIM9	8.8	8.4	6.9	
	TIM10	5.6	5.2	4.3	
	TIM11	5.4	5.2	4.3	
	SPI5	3	2.8	2.2	
	SPI6	3	2.8	2.2	
	SAI1	3.4	3.3	2.6	
	SAI2	3.3	3.2	2.5	
	LTDC	56.7	53.8	45.7	

1. When the I/O compensation cell is ON, I_{DD} typical value increases by 0.22 mA.
2. The BusMatrix is automatically active when at least one master is ON.
3. To enable an I2S peripheral, first set the I2SMOD bit and then the I2SE bit in the SPI_I2SCFGR register.
4. When the DAC is ON and EN1/2 bits are set in DAC_CR register, add an additional power consumption of 0.75 mA per DAC channel for the analog part.
5. When the ADC is ON (ADON bit set in the ADC_CR2 register), add an additional power consumption of 1.73 mA per ADC for the analog part.

5.3.8 Wakeup time from low-power modes

The wakeup times given in *Table 36* are measured starting from the wakeup event trigger up to the first instruction executed by the CPU:

- For Stop or Sleep modes: the wakeup event is WFE.
- WKUP (PA0) pin is used to wakeup from Standby, Stop and Sleep modes.

All timings are derived from tests performed under ambient temperature and V_{DD}=3.3 V.

Table 36. Low-power mode wakeup timings

Symbol	Parameter	Conditions	Typ(1)	Max(1)	Unit
$t_{WUSLEEP}$(2)	Wakeup from Sleep	-	13	13	CPU clock cycles
t_{WUSTOP}(2)	Wakeup from Stop mode with MR/LP regulator in normal mode	Main regulator is ON	14	14.9	µs
		Main regulator is ON and Flash memory in Deep power down mode	104.1	107.6	
		Low power regulator is ON	21.4	24.2	
		Low power regulator is ON and Flash memory in Deep power down mode	111.5	116.5	
t_{WUSTOP}(2)	Wakeup from Stop mode with MR/LP regulator in Under-drive mode	Main regulator in under-drive mode (Flash memory in Deep power-down mode)	107.4	113.2	
		Low power regulator in under-drive mode (Flash memory in Deep power-down mode)	112.7	120	
tWUSTDBY (2)	Wakeup from Standby mode	Exit Standby mode on rising edge	308	313	
		Exit Standby mode on falling edge	307	313	

1. Guaranteed by characterization results.
2. The wakeup times are measured from the wakeup event to the point in which the application code reads the first

5.3.9 External clock source characteristics

High-speed external user clock generated from an external source

In bypass mode the HSE oscillator is switched off and the input pin is a standard I/O. The external clock signal has to respect the *Table 56: I/O static characteristics*. However, the recommended clock input waveform is shown in *Figure 30*.

The characteristics given in *Table 37* result from tests performed using an high-speed external clock source, and under ambient temperature and supply voltage conditions summarized in *Table 17*.

Table 37. High-speed external user clock characteristics

Symbol	Parameter	Conditions	Min	Typ	Max	Unit
f_{HSE_ext}	External user clock source frequency(1)	-	1	-	50	MHz
V_{HSEH}	OSC_IN input pin high level voltage		$0.7V_{DD}$	-	V_{DD}	V
V_{HSEL}	OSC_IN input pin low level voltage		V_{SS}	-	$0.3V_{DD}$	
$t_{w(HSE)}$ $t_{w(HSE)}$	OSC_IN high or low time(1)		5	-	-	ns
$t_{r(HSE)}$ $t_{f(HSE)}$	OSC_IN rise or fall time(1)		-	-	10	
$C_{in(HSE)}$	OSC_IN input capacitance(1)	-	-	5	-	pF
$DuCy_{(HSE)}$	Duty cycle	-	45	-	55	%
I_L	OSC_IN Input leakage current	$V_{SS} \leq V_{IN} \leq V_{DD}$	-	-	±1	µA

1. Guaranteed by design.

Low-speed external user clock generated from an external source

In bypass mode the LSE oscillator is switched off and the input pin is a standard I/O. The external clock signal has to respect the *Table 56: I/O static characteristics*. However, the recommended clock input waveform is shown in *Figure 31*.

The characteristics given in *Table 38* result from tests performed using an low-speed external clock source, and under ambient temperature and supply voltage conditions summarized in *Table 17*.

Table 38. Low-speed external user clock characteristics

Symbol	Parameter	Conditions	Min	Typ	Max	Unit
f_{LSE_ext}	User External clock source frequency(1)	-	-	32.768	1000	kHz
V_{LSEH}	OSC32_IN input pin high level voltage		$0.7V_{DD}$	-	V_{DD}	V
V_{LSEL}	OSC32_IN input pin low level voltage		V_{SS}	-	$0.3V_{DD}$	
$t_{w(LSE)}$ $t_{f(LSE)}$	OSC32_IN high or low time(1)		450	-	-	ns
$t_{r(LSE)}$ $t_{f(LSE)}$	OSC32_IN rise or fall time(1)		-	-	50	
$C_{in(LSE)}$	OSC32_IN input capacitance(1)	-	-	5	-	pF
$DuCy_{(LSE)}$	Duty cycle	-	30	-	70	%
I_L	OSC32_IN Input leakage current	$V_{SS} \leq V_{IN} \leq V_{DD}$	-	-	±1	µA

1. Guaranteed by design.

Figure 30. High-speed external clock source AC timing diagram

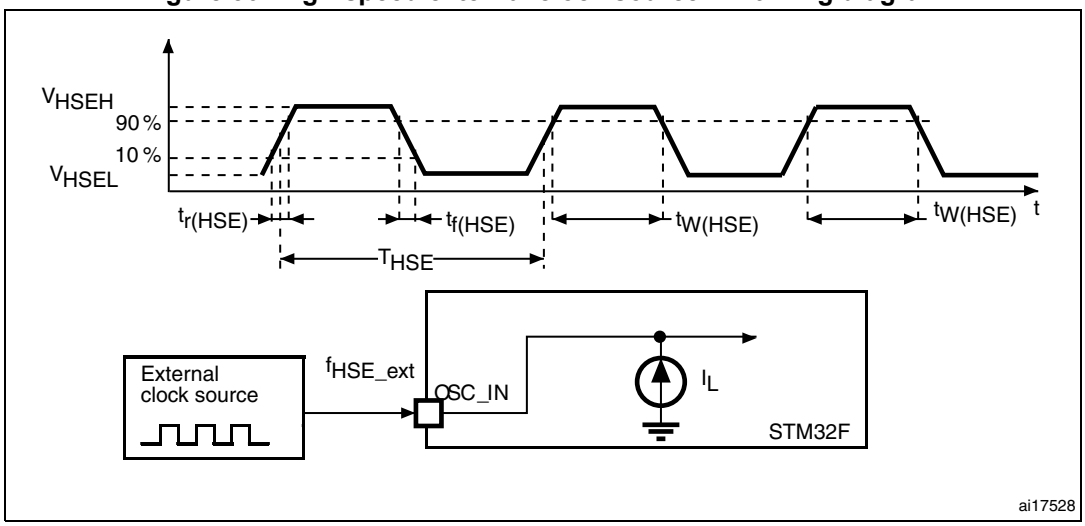

Figure 31. Low-speed external clock source AC timing diagram

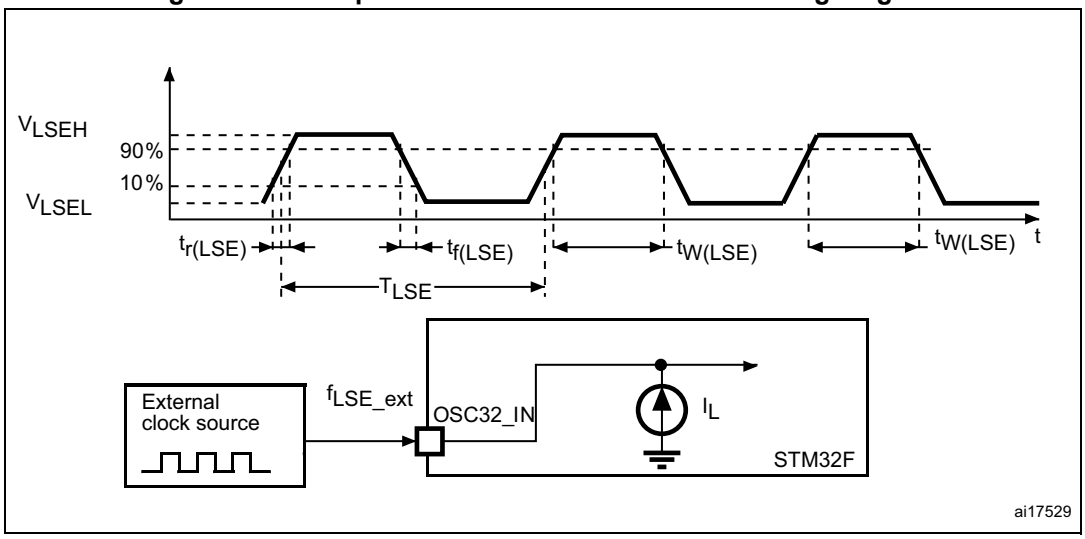

High-speed external clock generated from a crystal/ceramic resonator

The high-speed external (HSE) clock can be supplied with a 4 to 26 MHz crystal/ceramic resonator oscillator. All the information given in this paragraph are based on characterization results obtained with typical external components specified in *Table 39*. In the application, the resonator and the load capacitors have to be placed as close as possible to the oscillator pins in order to minimize output distortion and startup stabilization time. Refer to the crystal resonator manufacturer for more details on the resonator characteristics (frequency, package, accuracy).

Table 39. HSE 4-26 MHz oscillator characteristics(1)

Symbol	Parameter	Conditions	Min	Typ	Max	Unit
f_{OSC_IN}	Oscillator frequency	-	4	-	26	MHz
R_F	Feedback resistor	-	-	200	-	kΩ
I_{DD}	HSE current consumption	V_{DD}=3.3 V, ESR= 30 Ω, C_L=5 pF@25 MHz	-	450	-	µA
		V_{DD}=3.3 V, ESR= 30 Ω, C_L=10 pF@25 MHz	-	530	-	
ACC_{HSE}(2)	HSE accuracy	-	− 500	-	500	ppm
G_m_crit_max	Maximum critical crystal g_m	Startup	-	-	1	mA/V
$t_{SU(HSE}$(3)	Startup time	V_{DD} is stabilized	-	2	-	ms

1. Guaranteed by design.
2. This parameter depends on the crystal used in the application. The minimum and maximum values must be respected to comply with USB standard specifications.
3. $t_{SU(HSE)}$ is the startup time measured from the moment it is enabled (by software) to a stabilized 8 MHz oscillation is reached. This value is based on characterization results. It is measured for a standard crystal resonator and it can vary significantly with the crystal manufacturer.

For C_{L1} and C_{L2}, it is recommended to use high-quality external ceramic capacitors in the 5 pF to 25 pF range (typ.), designed for high-frequency applications, and selected to match the requirements of the crystal or resonator (see *Figure 32*). C_{L1} and C_{L2} are usually the same size. The crystal manufacturer typically specifies a load capacitance which is the series combination of C_{L1} and C_{L2}. PCB and MCU pin capacitance must be included (10 pF can be used as a rough estimate of the combined pin and board capacitance) when sizing C_{L1} and C_{L2}.

Note: For information on selecting the crystal, refer to the application note AN2867 "Oscillator design guide for ST microcontrollers" available from the ST website www.st.com.

Figure 32. Typical application with an 8 MHz crystal

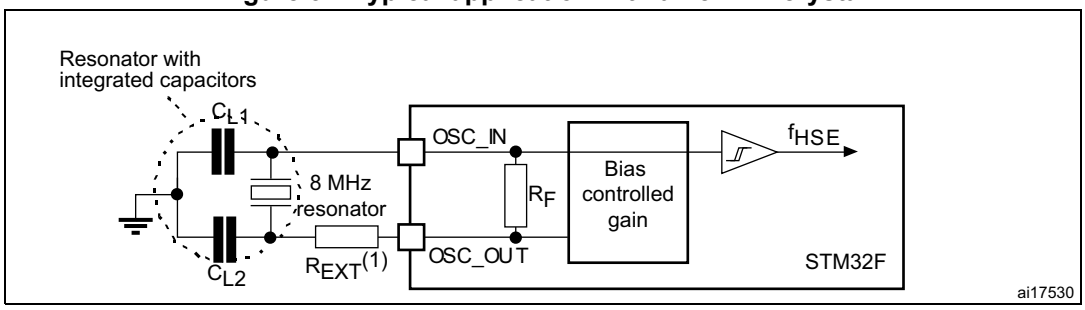

1. R_{EXT} value depends on the crystal characteristics.

Low-speed external clock generated from a crystal/ceramic resonator

The low-speed external (LSE) clock can be supplied with a 32.768 kHz crystal/ceramic resonator oscillator. All the information given in this paragraph are based on characterization results obtained with typical external components specified in *Table 40*. In the application, the resonator and the load capacitors have to be placed as close as possible to the oscillator pins in order to minimize output distortion and startup stabilization time. Refer to the crystal resonator manufacturer for more details on the resonator characteristics (frequency, package, accuracy).

Table 40. LSE oscillator characteristics (f_{LSE} = 32.768 kHz) (1)

Symbol	Parameter	Conditions	Min	Typ	Max	Unit
I_{DD}	LSE current consumption	LSEDRV[1:0]=00 Low drive capability	-	250	-	nA
		LSEDRV[1:0]=10 Medium low drive capability	-	300	-	
		LSEDRV[1:0]=01 Medium high drive capability	-	370	-	
		LSEDRV[1:0]=11 High drive capability	-	480	-	

Table 40. LSE oscillator characteristics (f_{LSE} = 32.768 kHz) (1) (continued)

Symbol	Parameter	Conditions	Min	Typ	Max	Unit
G_m_crit_max	Maximum critical crystal g_m	LSEDRV[1:0]=00 Low drive capability	-	-	0.48	µA/V
		LSEDRV[1:0]=10 Medium low drive capability	-	-	0.75	
		LSEDRV[1:0]=01 Medium high drive capability	-	-	1.7	
		LSEDRV[1:0]=11 High drive capability	-	-	2.7	
t_{SU}(2)	start-up time	V_{DD} is stabilized	-	2	-	s

1. Guaranteed by design.
2. Guaranteed by characterization results. t_{SU} is the start-up time measured from the moment it is enabled (by software) to a stabilized 32.768 kHz oscillation is reached. This value is measured for a standard crystal resonator and it can vary significantly with the crystal manufacturer.

Note: For information on selecting the crystal, refer to the application note AN2867 "Oscillator design guide for ST microcontrollers" available from the ST website www.st.com.

Figure 33. Typical application with a 32.768 kHz crystal

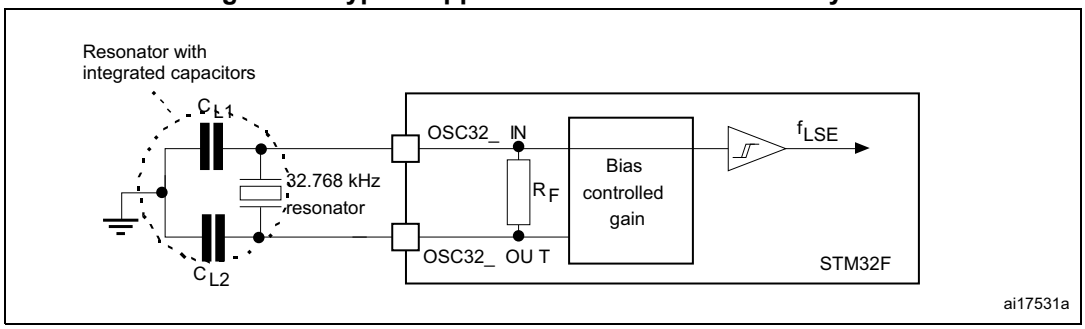

5.3.10 Internal clock source characteristics

The parameters given in *Table 41* and *Table 42* are derived from tests performed under ambient temperature and V_{DD} supply voltage conditions summarized in *Table 17*.

High-speed internal (HSI) RC oscillator

Table 41. HSI oscillator characteristics (1)

Symbol	Parameter	Conditions	Min	Typ	Max	Unit
f_{HSI}	Frequency	-	-	16	-	MHz
ACC_{HSI}	HSI user trimming step(2)	-	-	-	1	%
	Accuracy of the HSI oscillator	T_A = –40 to 105 °C(3)	− 8	-	4.5	%
		T_A = –10 to 85 °C(3)	− 4	-	4	%
		T_A = 25 °C(4)	− 1	-	1	%
$t_{su(HSI)}$(2)	HSI oscillator startup time	-	-	2.2	4	µs
$I_{DD(HSI)}$(2)	HSI oscillator power consumption	-	-	60	80	µA

1. V_{DD} = 3.3 V, T_A = –40 to 105 °C unless otherwise specified.
2. Guaranteed by design.
3. Guaranteed by characterization results.
4. Factory calibrated, parts not soldered.

Figure 34. HSI deviation versus temperature

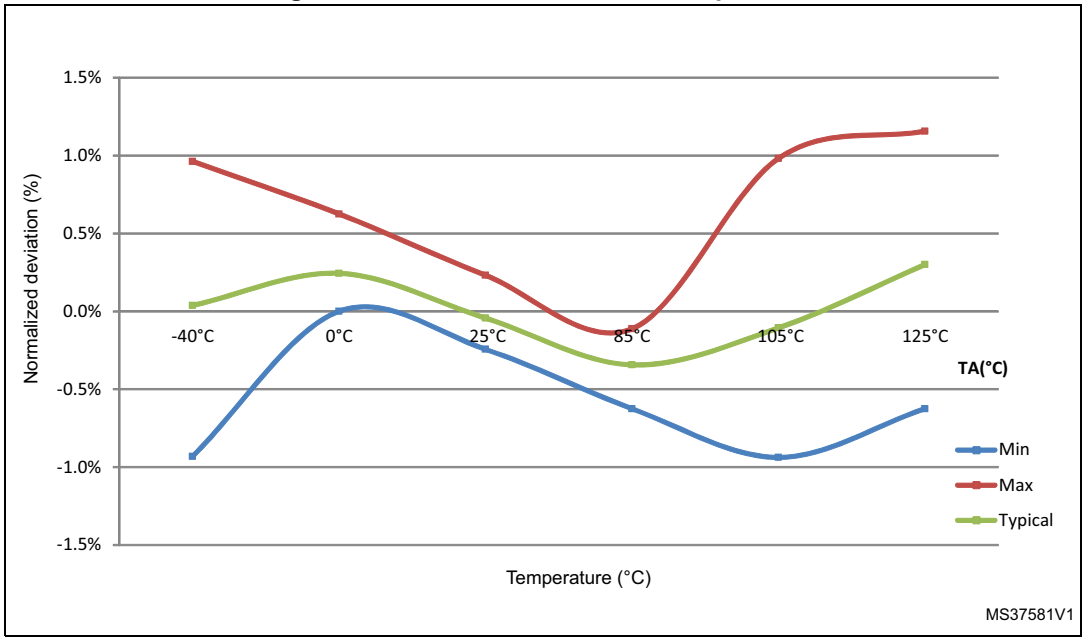

1. Guaranteed by characterization results.

Low-speed internal (LSI) RC oscillator

Table 42. LSI oscillator characteristics (1)

Symbol	Parameter	Min	Typ	Max	Unit
f_{LSI}(2)	Frequency	17	32	47	kHz
$t_{su(LSI)}$(3)	LSI oscillator startup time	-	15	40	µs
$I_{DD(LSI)}$(3)	LSI oscillator power consumption	-	0.4	0.6	µA

1. V_{DD} = 3 V, T_A = –40 to 105 °C unless otherwise specified.
2. Guaranteed by characterization results.
3. Guaranteed by design.

Figure 35. LSI deviation versus temperature

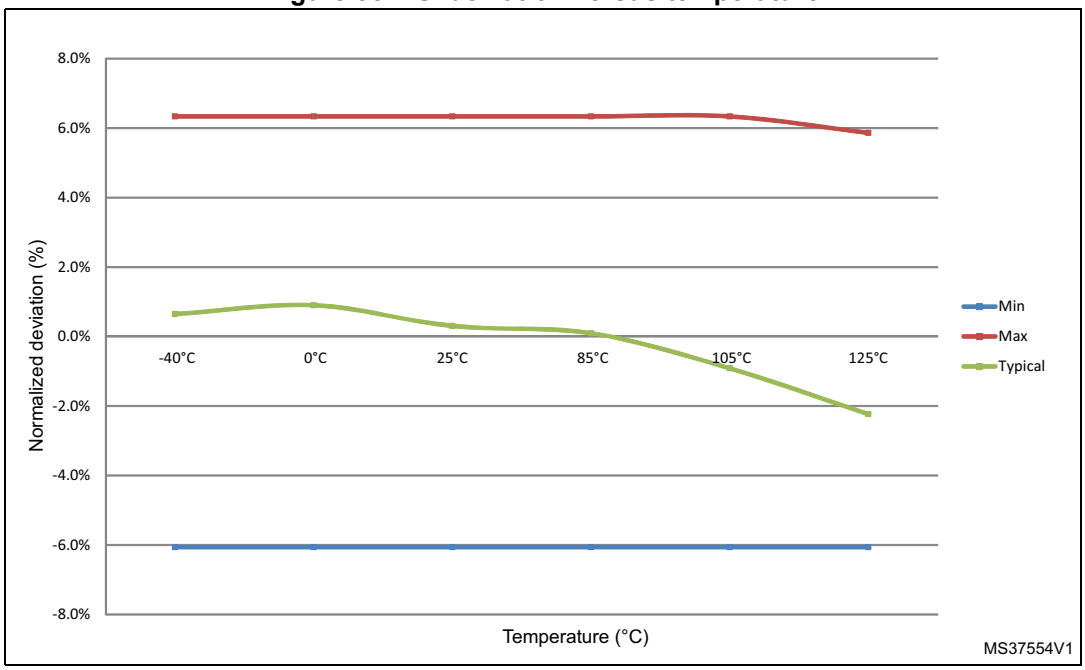

5.3.11 PLL characteristics

The parameters given in *Table 43* and *Table 44* are derived from tests performed under temperature and V_{DD} supply voltage conditions summarized in *Table 17*.

Table 43. Main PLL characteristics

Symbol	Parameter	Conditions	Min	Typ	Max	Unit
f_{PLL_IN}	PLL input clock(1)	-	0.95(2)	1	2.10	MHz
f_{PLL_OUT}	PLL multiplier output clock	-	24	-	216	
f_{PLL48_OUT}	48 MHz PLL multiplier output clock	-	-	48	75	
f_{VCO_OUT}	PLL VCO output	-	100	-	432	

Table 43. Main PLL characteristics (continued)

Symbol	Parameter	Conditions		Min	Typ	Max	Unit
t_{LOCK}	PLL lock time	VCO freq = 100 MHz		75	-	200	µs
		VCO freq = 432 MHz		100	-	300	
Jitter(3)	Cycle-to-cycle jitter	System clock 216 MHz	RMS	-	25	-	ps
			peak to peak	-	±150	-	
	Period Jitter		RMS	-	15	-	
			peak to peak	-	±200	-	
	Main clock output (MCO) for RMII Ethernet	Cycle to cycle at 50 MHz on 1000 samples		-	32	-	
	Main clock output (MCO) for MII Ethernet	Cycle to cycle at 25 MHz on 1000 samples		-	40	-	
	Bit Time CAN jitter	Cycle to cycle at 1 MHz on 1000 samples		-	330	-	
$I_{DD(PLL)}$(4)	PLL power consumption on V_{DD}	VCO freq = 100 MHz VCO freq = 432 MHz		0.15 0.45	-	0.40 0.75	mA
$I_{DDA(PLL)}$(4)	PLL power consumption on V_{DDA}	VCO freq = 100 MHz VCO freq = 432 MHz		0.30 0.55	-	0.40 0.85	mA

1. Take care of using the appropriate division factor M to obtain the specified PLL input clock values. The M factor is shared between PLL and PLLI2S.
2. Guaranteed by design.
3. The use of 2 PLLs in parallel could degraded the Jitter up to +30%.
4. Guaranteed by characterization results.

Table 44. PLLI2S characteristics

Symbol	Parameter	Conditions	Min	Typ	Max	Unit
f_{PLLI2S_IN}	PLLI2S input clock(1)	-	0.95(2)	1	2.10	MHz
$f_{PLLI2SP_OUT}$	PLLI2S multiplier output clock for SPDIFRX	-	-	-	216	
$f_{PLLI2SQ_OUT}$	PLLI2S multiplier output clock for SAI	-	-	-	216	
$f_{PLLI2SR_OUT}$	PLLI2S multiplier output clock for I2S	-	-	-	216	
f_{VCO_OUT}	PLLI2S VCO output	-	100	-	432	
t_{LOCK}	PLLI2S lock time	VCO freq = 100 MHz	75	-	200	µs
		VCO freq = 432 MHz	100	-	300	

Table 44. PLLI2S characteristics (continued)

Symbol	Parameter	Conditions		Min	Typ	Max	Unit
Jitter(3)	Master I2S clock jitter	Cycle to cycle at 12.288 MHz on 48KHz period, N=432, R=5	RMS	-	90	-	
			peak to peak	-	±280	-	ps
		Average frequency of 12.288 MHz N = 432, R = 5 on 1000 samples		-	90	-	ps
	WS I2S clock jitter	Cycle to cycle at 48 KHz on 1000 samples		-	400	-	ps
$I_{DD(PLLI2S)}$(4)	PLLI2S power consumption on V_{DD}	VCO freq = 100 MHz VCO freq = 432 MHz		0.15 0.45	-	0.40 0.75	mA
$I_{DDA(PLLI2S)}$(4)	PLLI2S power consumption on V_{DDA}	VCO freq = 100 MHz VCO freq = 432 MHz		0.30 0.55	-	0.40 0.85	mA

1. Take care of using the appropriate division factor M to have the specified PLL input clock values.
2. Guaranteed by design.
3. Value given with main PLL running.
4. Guaranteed by characterization results.

Table 45. PLLISAI characteristics

Symbol	Parameter	Conditions	Min	Typ	Max	Unit
f_{PLLSAI_IN}	PLLSAI input clock(1)	-	0.95(2)	1	2.10	MHz
$f_{PLLSAIP_OUT}$	PLLSAI multiplier output clock for 48 MHz	-	-	48	75	
$f_{PLLSAIQ_OUT}$	PLLSAI multiplier output clock for SAI	-	-	-	216	
$f_{PLLSAIR_OUT}$	PLLSAI multiplier output clock for LCD-TFT	-	-	-	216	
f_{VCO_OUT}	PLLSAI VCO output	-	100	-	432	
t_{LOCK}	PLLSAI lock time	VCO freq = 100 MHz	75	-	200	µs
		VCO freq = 432 MHz	100	-	300	

Table 45. PLLISAI characteristics (continued)

Symbol	Parameter	Conditions		Min	Typ	Max	Unit
Jitter(3)	Master SAI clock jitter	Cycle to cycle at 12.288 MHz on 48KHz period, N=432, R=5	RMS	-	90	-	
			peak to peak	-	±280	-	ps
		Average frequency of 12.288 MHz N = 432, R = 5 on 1000 samples		-	90	-	ps
	FS clock jitter	Cycle to cycle at 48 KHz on 1000 samples		-	400	-	ps
$I_{DD(PLLSAI)}$(4)	PLLSAI power consumption on V_{DD}	VCO freq = 100 MHz VCO freq = 432 MHz		0.15 0.45	-	0.40 0.75	mA
$I_{DDA(PLLSAI)}$(4)	PLLSAI power consumption on V_{DDA}	VCO freq = 100 MHz VCO freq = 432 MHz		0.30 0.55	-	0.40 0.85	mA

1. Take care of using the appropriate division factor M to have the specified PLL input clock values.
2. Guaranteed by design.
3. Value given with main PLL running.
4. Guaranteed by characterization results.

5.3.12 PLL spread spectrum clock generation (SSCG) characteristics

The spread spectrum clock generation (SSCG) feature allows to reduce electromagnetic interferences (see *Table 52: EMI characteristics*). It is available only on the main PLL.

Table 46. SSCG parameters constraint

Symbol	Parameter	Min	Typ	Max(1)	Unit
f_{Mod}	Modulation frequency	-	-	10	KHz
md	Peak modulation depth	0.25	-	2	%
MODEPER * INCSTEP	-	-	-	$2^{15} - 1$	-

1. Guaranteed by design.

Equation 1

The frequency modulation period (MODEPER) is given by the equation below:

$$MODEPER = round[f_{PLL_IN} / (4 \times f_{Mod})]$$

f_{PLL_IN} and f_{Mod} must be expressed in Hz.

As an example:

If f_{PLL_IN} = 1 MHz, and f_{MOD} = 1 kHz, the modulation depth (MODEPER) is given by equation 1:

$$MODEPER = round[10^6 / (4 \times 10^3)] = 250$$

Equation 2

Equation 2 allows to calculate the increment step (INCSTEP):

$$INCSTEP = round[((2^{15} - 1) \times md \times PLLN) / (100 \times 5 \times MODEPER)]$$

f_{VCO_OUT} must be expressed in MHz.

With a modulation depth (md) = ±2 % (4 % peak to peak), and PLLN = 240 (in MHz):

$$INCSTEP = round[((2^{15} - 1) \times 2 \times 240) / (100 \times 5 \times 250)] = 126 md(quantitazed)\%$$

An amplitude quantization error may be generated because the linear modulation profile is obtained by taking the quantized values (rounded to the nearest integer) of MODPER and INCSTEP. As a result, the achieved modulation depth is quantized. The percentage quantized modulation depth is given by the following formula:

$$md_{quantized}\% = (MODEPER \times INCSTEP \times 100 \times 5) / ((2^{15} - 1) \times PLLN)$$

As a result:

$$md_{quantized}\% = (250 \times 126 \times 100 \times 5) / ((2^{15} - 1) \times 240) = 2.002\%(peak)$$

Figure 36 and *Figure 37* show the main PLL output clock waveforms in center spread and down spread modes, where:

F0 is f_{PLL_OUT} nominal.

T_{mode} is the modulation period.

md is the modulation depth.

Figure 36. PLL output clock waveforms in center spread mode

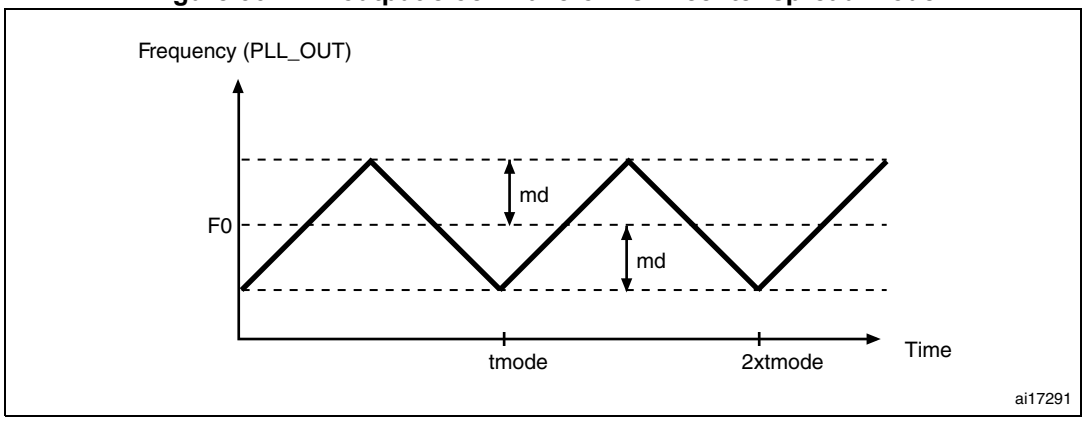

Figure 37. PLL output clock waveforms in down spread mode

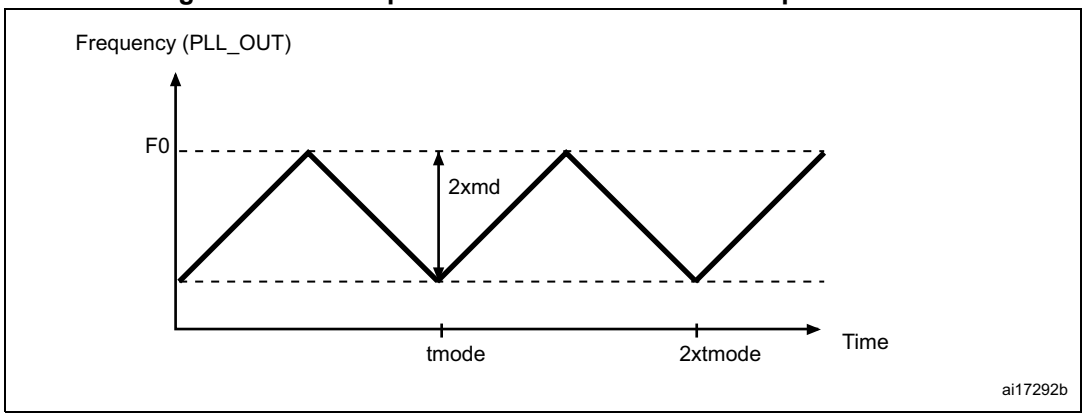

5.3.13 Memory characteristics

Flash memory

The characteristics are given at TA = –40 to 105 °C unless otherwise specified.

The devices are shipped to customers with the Flash memory erased.

Table 47. Flash memory characteristics

Symbol	Parameter	Conditions	Min	Typ	Max	Unit
I_{DD}	Supply current	Write / Erase 8-bit mode, V_{DD} = 1.7 V	-	14	-	mA
		Write / Erase 16-bit mode, V_{DD} = 2.1 V	-	17	-	
		Write / Erase 32-bit mode, V_{DD} = 3.3 V	-	24	-	

Table 48. Flash memory programming

Symbol	Parameter	Conditions	Min(1)	Typ	Max(1)	Unit
t_{prog}	Word programming time	Program/erase parallelism (PSIZE) = x 8/16/32	-	16	100(2)	µs
$t_{ERASE32KB}$	Sector (32 KB) erase time	Program/erase parallelism (PSIZE) = x 8	-	400	800	ms
		Program/erase parallelism (PSIZE) = x 16	-	250	600	
		Program/erase parallelism (PSIZE) = x 32	-	200	500	
$t_{ERASE128KB}$	Sector (128 KB) erase time	Program/erase parallelism (PSIZE) = x 8	-	1100	2400	ms
		Program/erase parallelism (PSIZE) = x 16	-	800	1400	
		Program/erase parallelism (PSIZE) = x 32	-	500	1100	

Table 48. Flash memory programming (continued)

Symbol	Parameter	Conditions	Min(1)	Typ	Max(1)	Unit
$t_{ERASE256KB}$	Sector (256 KB) erase time	Program/erase parallelism (PSIZE) = x 8	-	2.1	4	s
		Program/erase parallelism (PSIZE) = x 16	-	1.5	2.6	
		Program/erase parallelism (PSIZE) = x 32	-	1	2	
t_{ME}	Mass erase time	Program/erase parallelism (PSIZE) = x 8	-	8	16	s
		Program/erase parallelism (PSIZE) = x 16	-	5.6	11.2	
		Program/erase parallelism (PSIZE) = x 32	-	4	8	
V_{prog}	Programming voltage	32-bit program operation	2.7	-	3	V
		16-bit program operation	2.1	-	3.6	V
		8-bit program operation	1.7	-	3.6	V

1. Guaranteed by characterization results.
2. The maximum programming time is measured after 100K erase operations.

Table 49. Flash memory programming with V_{PP}

Symbol	Parameter	Conditions	Min(1)	Typ	Max(1)	Unit
t_{prog}	Double word programming	T_A = 0 to +40 °C V_{DD} = 3.3 V V_{PP} = 8.5 V	-	16	100(2)	µs
$t_{ERASE32KB}$	Sector (32 KB) erase time		-	180	-	ms
$t_{ERASE128KB}$	Sector (128 KB) erase time		-	450	-	
$t_{ERASE256KB}$	Sector (256 KB) erase time		-	900	-	
t_{ME}	Mass erase time		-	6.9	-	s
V_{prog}	Programming voltage	-	2.7	-	3.6	V
V_{PP}	V_{PP} voltage range	-	7	-	9	V
I_{PP}	Minimum current sunk on the V_{PP} pin	-	10	-	-	mA
t_{VPP}(3)	Cumulative time during which V_{PP} is applied	-	-	-	1	hour

1. Guaranteed by design.
2. The maximum programming time is measured after 100K erase operations.
3. V_{PP} should only be connected during programming/erasing.

Table 50. Flash memory endurance and data retention

Symbol	Parameter	Conditions	Value	Unit
			Min(1)	
N_{END}	Endurance	T_A = –40 to +85 °C (6 suffix versions) T_A = –40 to +105 °C (7 suffix versions)	10	kcycles
t_{RET}	Data retention	1 kcycle(2) at T_A = 85 °C	30	Years
		1 kcycle(2) at T_A = 105 °C	10	
		10 kcycles(2) at T_A = 55 °C	20	

1. Guaranteed by characterization results.
2. Cycling performed over the whole temperature range.

5.3.14 EMC characteristics

Susceptibility tests are performed on a sample basis during device characterization.

Functional EMS (electromagnetic susceptibility)

While a simple application is executed on the device (toggling 2 LEDs through I/O ports). the device is stressed by two electromagnetic events until a failure occurs. The failure is indicated by the LEDs:

- **Electrostatic discharge (ESD)** (positive and negative) is applied to all device pins until a functional disturbance occurs. This test is compliant with the IEC 61000-4-2 standard.
- **FTB**: A burst of fast transient voltage (positive and negative) is applied to V_{DD} and V_{SS} through a 100 pF capacitor, until a functional disturbance occurs. This test is compliant with the IEC 61000-4-4 standard.

A device reset allows normal operations to be resumed.

The test results are given in *Table 51*. They are based on the EMS levels and classes defined in application note AN1709.

Table 51. EMS characteristics

Symbol	Parameter	Conditions	Level/ Class
V_{FESD}	Voltage limits to be applied on any I/O pin to induce a functional disturbance	V_{DD} = 3.3 V, LQFP176, T_A = +25 °C, f_{HCLK} = 216 MHz, conforms to IEC 61000-4-2	2B
V_{EFTB}	Fast transient voltage burst limits to be applied through 100 pF on V_{DD} and V_{SS} pins to induce a functional disturbance	V_{DD} = 3.3 V, TFBGA216, T_A =+25 °C, f_{HCLK} = 216 MHz, conforms to IEC 61000-4-2	4A

As a consequence, it is recommended to add a serial resistor (1 kΩ) located as close as possible to the MCU to the pins exposed to noise (connected to tracks longer than 50 mm on PCB).

Designing hardened software to avoid noise problems

EMC characterization and optimization are performed at component level with a typical application environment and simplified MCU software. It should be noted that good EMC performance is highly dependent on the user application and the software in particular.

Therefore it is recommended that the user applies EMC software optimization and prequalification tests in relation with the EMC level requested for his application.

Software recommendations

The software flowchart must include the management of runaway conditions such as:

- Corrupted program counter
- Unexpected reset
- Critical Data corruption (control registers...)

Prequalification trials

Most of the common failures (unexpected reset and program counter corruption) can be reproduced by manually forcing a low state on the NRST pin or the Oscillator pins for 1 second.

To complete these trials, ESD stress can be applied directly on the device, over the range of specification values. When unexpected behavior is detected, the software can be hardened to prevent unrecoverable errors occurring (see application note AN1015).

Electromagnetic Interference (EMI)

The electromagnetic field emitted by the device are monitored while a simple application, executing EEMBC code, is running. This emission test is compliant with SAE IEC61967-2 standard which specifies the test board and the pin loading.

Table 52. EMI characteristics

Symbol	Parameter	Conditions	Monitored frequency band	Max vs. [f_{HSE}/f_{CPU}] 25/200 MHz	Unit
S_{EMI}	Peak level	V_{DD} = 3.6 V, T_A = 25 °C, TFBGA216 package, conforming to IEC61967-2 ART/L1-cache OFF, over-drive ON, all peripheral clocks enabled, clock dithering disabled.	0.1 to 30 MHz	- 4	dBµV
			30 to 130 MHz	9	
			130 MHz to 1GHz	11	
			EMI Level	3	-
		V_{DD} = 3.6 V, T_A = 25 °C, TFBGA216 package, conforming to IEC61967-2 ART/L1-cache ON, over-drive ON, all peripheral clocks enabled, clock dithering disabled.	0.1 to 30 MHz	4	dBµV
			30 to 130 MHz	5	
			130 MHz to 1GHz	14	
			EMI level	3	-
		V_{DD} = 3.6 V, T_A = 25 °C, TFBGA216 package, conforming to IEC61967-2 ART/L1-cache ON, over-drive ON, all peripheral clocks enabled, clock dithering enabled.	0.1 to 30 MHz	- 9	dBµV
			30 to 130 MHz	-7	
			130 MHz to 1GHz	-5	
			EMI level	1.5	-

5.3.15 Absolute maximum ratings (electrical sensitivity)

Based on three different tests (ESD, LU) using specific measurement methods, the device is stressed in order to determine its performance in terms of electrical sensitivity.

Electrostatic discharge (ESD)

Electrostatic discharges (a positive then a negative pulse separated by 1 second) are applied to the pins of each sample according to each pin combination. The sample size depends on the number of supply pins in the device (3 parts × (n+1) supply pins). This test conforms to the ANSI/ESDA/JEDEC JS-001-2012 and ANSI/ESD S5.3.1-2009 standards.

Table 53. ESD absolute maximum ratings

Symbol	Ratings	Conditions	Class	Maximum value(1)	Unit
$V_{ESD(HBM)}$	Electrostatic discharge voltage (human body model)	T_A = +25 °C conforming to ANSI/ESDA/JEDEC JS-001-2012	2	2000	V
$V_{ESD(CDM)}$	Electrostatic discharge voltage (charge device model)	T_A = +25 °C conforming to ANSI/ESD S5.3.1-2009, LQFP100, LQFP144, LQFP176, LQFP208, WLCSP143, UFBGA176, TFBGA100 and TFBGA216 packages	C3	250	

1. Guaranteed by characterization results.

Static latchup

Two complementary static tests are required on six parts to assess the latchup performance:

- A supply overvoltage is applied to each power supply pin
- A current injection is applied to each input, output and configurable I/O pin

These tests are compliant with EIA/JESD 78A IC latchup standard.

Table 54. Electrical sensitivities

Symbol	Parameter	Conditions	Class
LU	Static latch-up class	T_A = +105 °C conforming to JESD78A	II level A

5.3.16 I/O current injection characteristics

As a general rule, current injection to the I/O pins, due to external voltage below V_{SS} or above V_{DD} (for standard, 3 V-capable I/O pins) should be avoided during normal product operation. However, in order to give an indication of the robustness of the microcontroller in cases when abnormal injection accidentally happens, susceptibility tests are performed on a sample basis during device characterization.

Functional susceptibilty to I/O current injection

While a simple application is executed on the device, the device is stressed by injecting current into the I/O pins programmed in floating input mode. While current is injected into the I/O pin, one at a time, the device is checked for functional failures.

The failure is indicated by an out of range parameter: ADC error above a certain limit (>5 LSB TUE), out of conventional limits of induced leakage current on adjacent pins (out of –5 µA/+0 µA range), or other functional failure (for example reset, oscillator frequency deviation).

Negative induced leakage current is caused by negative injection and positive induced leakage current by positive injection.

The test results are given in *Table 55*.

Table 55. I/O current injection susceptibility(1)

Symbol	Description	Functional susceptibility		Unit
		Negative injection	Positive injection	
I_{INJ}	Injected current on BOOT pin	− 0	NA	mA
	Injected current on NRST pin	− 0	NA	
	Injected current on PA0, PC0 pins	− 0	NA	
	Injected current on any other FT pin	− 5	NA	
	Injected current on any other pins	− 5	+5	

1. NA = not applicable.

Note: It is recommended to add a Schottky diode (pin to ground) to analog pins which may potentially inject negative currents.

5.3.17 I/O port characteristics

General input/output characteristics

Unless otherwise specified, the parameters given in *Table 56: I/O static characteristics* are derived from tests performed under the conditions summarized in *Table 17*. All I/Os are CMOS and TTL compliant.

Table 56. I/O static characteristics

Symbol	Parameter	Conditions	Min	Typ	Max	Unit
V_{IL}	FT, TTa and NRST I/O input low level voltage	1.7 V≤V_{DD}≤3.6 V	-	-	$0.35V_{DD}$ − 0.04 (1)	V
					$0.3V_{DD}$(2)	
	BOOT I/O input low level voltage	1.75 V≤V_{DD} ≤3.6 V, –40 °C≤T_A ≤105 °C	-	-	$0.1V_{DD}$+0.1(1)	
		1.7 V≤V_{DD} ≤3.6 V, 0 °C≤T_A ≤105 °C	-	-		

Table 56. I/O static characteristics (continued)

Symbol	Parameter		Conditions	Min	Typ	Max	Unit
V_{IH}	FT, TTa and NRST I/O input high level voltage(5)		1.7 V≤V_{DD}≤3.6 V	0.45V_{DD}+0.3(1)	-	-	V
				0.7V_{DD}(2)			
	BOOT I/O input high level voltage		1.75 V≤V_{DD} ≤3.6 V, –40 °C≤T_A ≤105 °C	0.17V_{DD}+0.7(1)	-	-	
			1.7 V≤V_{DD} ≤3.6 V, 0 °C≤T_A ≤105 °C				
V_{HYS}	FT, TTa and NRST I/O input hysteresis		1.7 V≤V_{DD}≤3.6 V	10%V_{DD}(3)	-	-	V
	BOOT I/O input hysteresis		1.75 V≤V_{DD} ≤3.6 V, –40 °C≤T_A ≤105 °C	0.1	-	-	
			1.7 V≤V_{DD} ≤3.6 V, 0 °C≤T_A ≤105 °C				
I_{lkg}	I/O input leakage current (4)		V_{SS} ≤V_{IN} ≤V_{DD}	-	-	±1	µA
	I/O FT input leakage current (5)		V_{IN} = 5 V	-	-	3	
R_{PU}	Weak pull-up equivalent resistor(6)	All pins except for PA10/PB12 (OTG_FS_ID ,OTG_HS_ID)	V_{IN} = V_{SS}	30	40	50	kΩ
		PA10/PB12 (OTG_FS_ID ,OTG_HS_ID)		7	10	14	
R_{PD}	Weak pull-down equivalent resistor(7)	All pins except for PA10/PB12 (OTG_FS_ID ,OTG_HS_ID)	V_{IN} = V_{DD}	30	40	50	
		PA10/PB12 (OTG_FS_ID ,OTG_HS_ID)		7	10	14	
C_{IO}(8)	I/O pin capacitance		-	-	5	-	pF

1. Guaranteed by design.
2. Tested in production.
3. With a minimum of 200 mV.
4. Leakage could be higher than the maximum value, if negative current is injected on adjacent pins, Refer to *Table 55: I/O current injection susceptibility*
5. To sustain a voltage higher than VDD +0.3 V, the internal pull-up/pull-down resistors must be disabled. Leakage could be higher than the maximum value, if negative current is injected on adjacent pins.Refer to *Table 55: I/O current injection susceptibility*
6. Pull-up resistors are designed with a true resistance in series with a switchable PMOS. This PMOS contribution to the series resistance is minimum (~10% order).

7. Pull-down resistors are designed with a true resistance in series with a switchable NMOS. This NMOS contribution to the series resistance is minimum (~10% order).
8. Hysteresis voltage between Schmitt trigger switching levels. Guaranteed by characterization results.

All I/Os are CMOS and TTL compliant (no software configuration required). Their characteristics cover more than the strict CMOS-technology or TTL parameters. The coverage of these requirements for FT I/Os is shown in *Figure 38*.

Figure 38. FT I/O input characteristics

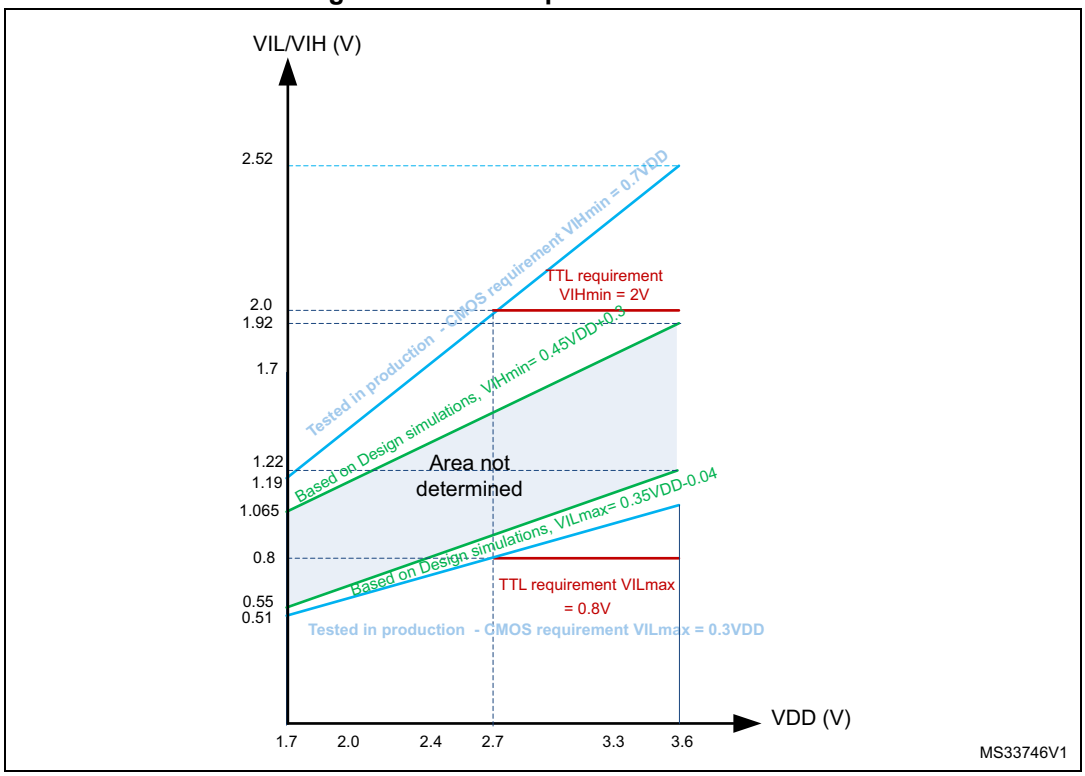

Output driving current

The GPIOs (general purpose input/outputs) can sink or source up to ±8 mA, and sink or source up to ±20 mA (with a relaxed V_{OL}/V_{OH}) except PC13, PC14, PC15 and PI8 which can sink or source up to ±3mA. When using the PC13 to PC15 and PI8 GPIOs in output mode, the speed should not exceed 2 MHz with a maximum load of 30 pF.

In the user application, the number of I/O pins which can drive current must be limited to respect the absolute maximum rating specified in *Section 5.2*. In particular:

- The sum of the currents sourced by all the I/Os on $V_{DD,}$ plus the maximum Run consumption of the MCU sourced on $V_{DD,}$ cannot exceed the absolute maximum rating ΣI_{VDD} (see *Table 15*).
- The sum of the currents sunk by all the I/Os on V_{SS} plus the maximum Run consumption of the MCU sunk on V_{SS} cannot exceed the absolute maximum rating ΣI_{VSS} (see *Table 15*).

Output voltage levels

Unless otherwise specified, the parameters given in *Table 57* are derived from tests performed under ambient temperature and V_{DD} supply voltage conditions summarized in *Table 17*. All I/Os are CMOS and TTL compliant.

Table 57. Output voltage characteristics

Symbol	Parameter	Conditions	Min	Max	Unit
V_{OL}(1)	Output low level voltage for an I/O pin	CMOS port(2) I_{IO} = +8 mA 2.7 V ≤V_{DD} ≤3.6 V	-	0.4	V
V_{OH}(3)	Output high level voltage for an I/O pin except PC14	CMOS port(2) I_{IO} = -8 mA 2.7 V ≤V_{DD} ≤3.6 V	V_{DD} − 0.4	-	
V_{OH}(3)	Output high level voltage for PC14	CMOS port(2) I_{IO} = -2 mA 2.7 V ≤V_{DD} ≤3.6 V	V_{DD} − 0.4	-	
V_{OL} (1)	Output low level voltage for an I/O pin	TTL port(2) I_{IO} =+8mA 2.7 V ≤V_{DD} ≤3.6 V	-	0.4	V
V_{OH} (3)	Output high level voltage for an I/O pin except PC14	TTL port(2) I_{IO} =-8mA 2.7 V ≤V_{DD} ≤3.6 V	2.4	-	
V_{OL}(1)	Output low level voltage for an I/O pin	I_{IO} = +20 mA 2.7 V ≤V_{DD} ≤3.6 V	-	1.3(4)	V
V_{OH}(3)	Output high level voltage for an I/O pin except PC14	I_{IO} = -20 mA 2.7 V ≤V_{DD} ≤3.6 V	V_{DD}−1.3(4)	-	
V_{OL}(1)	Output low level voltage for an I/O pin	I_{IO} = +6 mA 1.8 V ≤V_{DD} ≤3.6 V	-	0.4(4)	V
V_{OH}(3)	Output high level voltage for an I/O pin except PC14	I_{IO} = -6 mA 1.8 V ≤V_{DD} ≤3.6 V	V_{DD}−0.4(4)	-	
V_{OL}(1)	Output low level voltage for an I/O pin	I_{IO} = +4 mA 1.7 V ≤V_{DD} ≤3.6V	-	0.4(5)	V
V_{OH}(3)	Output high level voltage for an I/O pin except PC14	I_{IO} = -4 mA 1.7 V ≤V_{DD} ≤3.6V	V_{DD}−0.4(5)	-	
V_{OH}(3)	Output high level voltage for PC14	I_{IO} = -1 mA 1.7 V ≤V_{DD} ≤3.6V	V_{DD}−0.4(5)	-	

1. The I_{IO} current sunk by the device must always respect the absolute maximum rating specified in *Table 15*. and the sum of I_{IO} (I/O ports and control pins) must not exceed I_{VSS}.
2. TTL and CMOS outputs are compatible with JEDEC standards JESD36 and JESD52.
3. The I_{IO} current sourced by the device must always respect the absolute maximum rating specified in *Table 15* and the sum of I_{IO} (I/O ports and control pins) must not exceed I_{VDD}.
4. Based on characterization data.
5. Guaranteed by design.

Input/output AC characteristics

The definition and values of input/output AC characteristics are given in *Figure 39* and *Table 58*, respectively.

Unless otherwise specified, the parameters given in *Table 58* are derived from tests performed under the ambient temperature and V_{DD} supply voltage conditions summarized in *Table 17*.

Table 58. I/O AC characteristics(1)(2)

OSPEEDRy [1:0] bit value(1)	Symbol	Parameter	Conditions	Min	Typ	Max	Unit
00	$f_{max(IO)out}$	Maximum frequency(3)	C_L = 50 pF, $V_{DD} \geq$ 2.7 V	-	-	4	MHz
			C_L = 50 pF, $V_{DD} \geq$ 1.7 V	-	-	2	
			C_L = 10 pF, $V_{DD} \geq$ 2.7 V	-	-	8	
			C_L = 10 pF, $V_{DD} \geq$ 1.8 V	-	-	4	
			C_L = 10 pF, $V_{DD} \geq$ 1.7 V	-	-	3	
	$t_{f(IO)out}$/ $t_{r(IO)out}$	Output high to low level fall time and output low to high level rise time	C_L = 50 pF, V_{DD} = 1.7 V to 3.6 V	-	-	100	ns
01	$f_{max(IO)out}$	Maximum frequency(3)	C_L = 50 pF, $V_{DD} \geq$ 2.7 V	-	-	25	MHz
			C_L = 50 pF, $V_{DD} \geq$ 1.8 V	-	-	12.5	
			C_L = 50 pF, $V_{DD} \geq$ 1.7 V	-	-	10	
			C_L = 10 pF, $V_{DD} \geq$ 2.7 V	-	-	50	
			C_L = 10 pF, $V_{DD} \geq$ 1.8 V	-	-	20	
			C_L = 10 pF, $V_{DD} \geq$ 1.7 V	-	-	12.5	
	$t_{f(IO)out}$/ $t_{r(IO)out}$	Output high to low level fall time and output low to high level rise time	C_L = 50 pF, $V_{DD} \geq$ 2.7 V	-	-	10	ns
			C_L = 10 pF, $V_{DD} \geq$ 2.7 V	-	-	6	
			C_L = 50 pF, $V_{DD} \geq$ 1.7 V	-	-	20	
			C_L = 10 pF, $V_{DD} \geq$ 1.7 V	-	-	10	
10	$f_{max(IO)out}$	Maximum frequency(3)	C_L = 40 pF, $V_{DD} \geq$ 2.7 V	-	-	50(4)	MHz
			C_L = 10 pF, $V_{DD} \geq$ 2.7 V	-	-	100(4)	
			C_L = 40 pF, $V_{DD} \geq$ 1.7 V	-	-	25	
			C_L = 10 pF, $V_{DD} \geq$ 1.8 V	-	-	50	
			C_L = 10 pF, $V_{DD} \geq$ 1.7 V	-	-	42.5	
	$t_{f(IO)out}$/ $t_{r(IO)out}$	Output high to low level fall time and output low to high level rise time	C_L = 40 pF, $V_{DD} \geq$2.7 V	-	-	6	ns
			C_L = 10 pF, $V_{DD} \geq$ 2.7 V	-	-	4	
			C_L = 40 pF, $V_{DD} \geq$ 1.7 V	-	-	10	
			C_L = 10 pF, $V_{DD} \geq$ 1.7 V	-	-	6	

Table 58. I/O AC characteristics(1)(2) (continued)

OSPEEDRy [1:0] bit value(1)	Symbol	Parameter	Conditions	Min	Typ	Max	Unit
11	$f_{max(IO)out}$	Maximum frequency(3)	C_L = 30 pF, $V_{DD} \geq$ 2.7 V	-	-	100(4)	MHz
			C_L = 30 pF, $V_{DD} \geq$ 1.8 V	-	-	50	
			C_L = 30 pF, $V_{DD} \geq$ 1.7 V	-	-	42.5	
			C_L = 10 pF, $V_{DD} \geq$ 2.7 V	-	-	180(4)	
			C_L = 10 pF, $V_{DD} \geq$ 1.8 V	-	-	100	
			C_L = 10 pF, $V_{DD} \geq$ 1.7 V	-	-	72.5	
	$t_{f(IO)out}$/ $t_{r(IO)out}$	Output high to low level fall time and output low to high level rise time	C_L = 30 pF, $V_{DD} \geq$ 2.7 V	-	-	4	ns
			C_L = 30 pF, $V_{DD} \geq$1.8 V	-	-	6	
			C_L = 30 pF, $V_{DD} \geq$1.7 V	-	-	7	
			C_L = 10 pF, $V_{DD} \geq$ 2.7 V	-	-	2.5	
			C_L = 10 pF, $V_{DD} \geq$1.8 V	-	-	3.5	
			C_L = 10 pF, $V_{DD} \geq$1.7 V	-	-	4	
-	tEXTIpw	Pulse width of external signals detected by the EXTI controller	-	10	-	-	ns

1. Guaranteed by design.
2. The I/O speed is configured using the OSPEEDRy[1:0] bits. Refer to the STM32F75xxx and STM32F74xxx reference manual for a description of the GPIOx_SPEEDR GPIO port output speed register.
3. The maximum frequency is defined in *Figure 39*.
4. For maximum frequencies above 50 MHz and V_{DD} > 2.4 V, the compensation cell should be used.

Figure 39. I/O AC characteristics definition

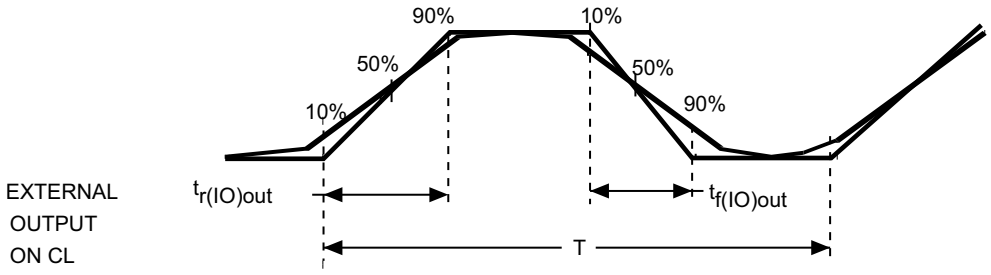

Maximum frequency is achieved if (t_r + t_f) ≤ (2/3)T and if the duty cycle is (45-55%) when loaded by CL specified in the table " *I/O AC characteristics*".

ai14131d

5.3.18 NRST pin characteristics

The NRST pin input driver uses CMOS technology. It is connected to a permanent pull-up resistor, R_{PU} (see *Table 56: I/O static characteristics*).

Unless otherwise specified, the parameters given in *Table 59* are derived from tests performed under the ambient temperature and V_{DD} supply voltage conditions summarized in *Table 17*.

Table 59. NRST pin characteristics

Symbol	Parameter	Conditions	Min	Typ	Max	Unit
R_{PU}	Weak pull-up equivalent resistor(1)	$V_{IN} = V_{SS}$	30	40	50	kΩ
$V_{F(NRST)}$(2)	NRST Input filtered pulse	-	-	-	100	ns
$V_{NF(NRST)}$(2)	NRST Input not filtered pulse	$V_{DD} > 2.7$ V	300	-	-	ns
T_{NRST_OUT}	Generated reset pulse duration	Internal Reset source	20	-	-	µs

1. The pull-up is designed with a true resistance in series with a switchable PMOS. This PMOS contribution to the series resistance must be minimum (~10% order).
2. Guaranteed by design.

Figure 40. Recommended NRST pin protection

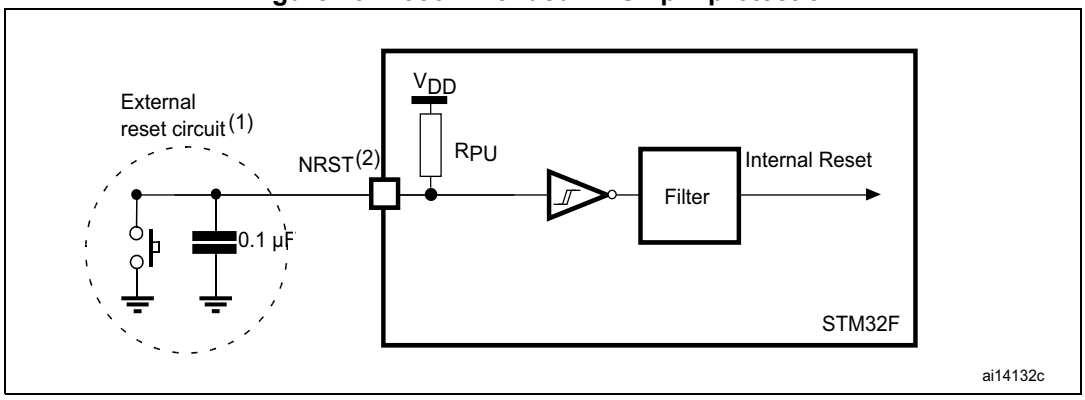

1. The reset network protects the device against parasitic resets.
2. The user must ensure that the level on the NRST pin can go below the $V_{IL(NRST)}$ max level specified in *Table 59*. Otherwise the reset is not taken into account by the device.

5.3.19 TIM timer characteristics

The parameters given in *Table 60* are guaranteed by design.

Refer to *Section 5.3.17: I/O port characteristics* for details on the input/output alternate function characteristics (output compare, input capture, external clock, PWM output).

Table 60. TIMx characteristics(1)(2)

Symbol	Parameter	Conditions(3)	Min	Max	Unit
$t_{res(TIM)}$	Timer resolution time	AHB/APBx prescaler=1 or 2 or 4, $f_{TIMxCLK}$ = 216 MHz	1	-	$t_{TIMxCLK}$
		AHB/APBx prescaler>4, $f_{TIMxCLK}$ = 108 MHz	1	-	$t_{TIMxCLK}$
f_{EXT}	Timer external clock frequency on CH1 to CH4	$f_{TIMxCLK}$ = 216 MHz	0	$f_{TIMxCLK}/2$	MHz
Res_{TIM}	Timer resolution		-	16/32	bit
t_{MAX_COUNT}	Maximum possible count with 32-bit counter	-	-	65536 × 65536	$t_{TIMxCLK}$

1. TIMx is used as a general term to refer to the TIM1 to TIM12 timers.
2. Guaranteed by design.
3. The maximum timer frequency on APB1 or APB2 is up to 216 MHz, by setting the TIMPRE bit in the RCC_DCKCFGR register, if APBx prescaler is 1 or 2 or 4, then TIMxCLK = HCLK, otherwise TIMxCLK = 4x PCLKx.

5.3.20 RTC characteristics

Table 61. RTC characteristics

Symbol	Parameter	Conditions	Min	Max
-	f_{PCLK1}/RTCCLK frequency ratio	Any read/write operation from/to an RTC register	4	-

5.3.21 12-bit ADC characteristics

Unless otherwise specified, the parameters given in *Table 62* are derived from tests performed under the ambient temperature, f_{PCLK2} frequency and V_{DDA} supply voltage conditions summarized in *Table 17*.

Table 62. ADC characteristics

Symbol	Parameter	Conditions	Min	Typ	Max	Unit
V_{DDA}	Power supply	$V_{DDA} - V_{REF+} < 1.2$ V	1.7(1)	-	3.6	V
V_{REF+}	Positive reference voltage		1.7(1)	-	V_{DDA}	V
V_{REF-}	Negative reference voltage	-	-	0	-	V

Table 62. ADC characteristics (continued)

Symbol	Parameter	Conditions	Min	Typ	Max	Unit
f_{ADC}	ADC clock frequency	V_{DDA} = 1.7(1) to 2.4 V	0.6	15	18	MHz
		V_{DDA} = 2.4 to 3.6 V	0.6	30	36	MHz
f_{TRIG}(2)	External trigger frequency	f_{ADC} = 30 MHz, 12-bit resolution	-	-	1764	kHz
		-	-	-	17	$1/f_{ADC}$
V_{AIN}	Conversion voltage range(3)	-	0 (V_{SSA} or V_{REF-} tied to ground)	-	V_{REF+}	V
R_{AIN}(2)	External input impedance	See *Equation 1* for details	-	-	50	kΩ
R_{ADC}(2)(4)	Sampling switch resistance	-	-	-	6	kΩ
C_{ADC}(2)	Internal sample and hold capacitor	-	-	4	7	pF
t_{lat}(2)	Injection trigger conversion latency	f_{ADC} = 30 MHz	-	-	0.100	µs
			-	-	3(5)	$1/f_{ADC}$
t_{latr}(2)	Regular trigger conversion latency	f_{ADC} = 30 MHz	-	-	0.067	µs
			-	-	2(5)	$1/f_{ADC}$
t_S(2)	Sampling time	f_{ADC} = 30 MHz	0.100	-	16	µs
		-	3	-	480	$1/f_{ADC}$
t_{STAB}(2)	Power-up time	-	-	2	3	µs
t_{CONV}(2)	Total conversion time (including sampling time)	f_{ADC} = 30 MHz 12-bit resolution	0.50	-	16.40	µs
		f_{ADC} = 30 MHz 10-bit resolution	0.43	-	16.34	µs
		f_{ADC} = 30 MHz 8-bit resolution	0.37	-	16.27	µs
		f_{ADC} = 30 MHz 6-bit resolution	0.30	-	16.20	µs
		9 to 492 (t_S for sampling +n-bit resolution for successive approximation)				$1/f_{ADC}$
f_S(2)	Sampling rate (f_{ADC} = 30 MHz, and t_S = 3 ADC cycles)	12-bit resolution Single ADC	-	-	2	Msps
		12-bit resolution Interleave Dual ADC mode	-	-	3.75	Msps
		12-bit resolution Interleave Triple ADC mode	-	-	6	Msps

Table 62. ADC characteristics (continued)

Symbol	Parameter	Conditions	Min	Typ	Max	Unit
I_{VREF+}(2)	ADC V_{REF} DC current consumption in conversion mode	-	-	300	500	µA
I_{VDDA}(2)	ADC V_{DDA} DC current consumption in conversion mode	-	-	1.6	1.8	mA

1. V_{DDA} minimum value of 1.7 V is obtained with the use of an external power supply supervisor (refer to *Section 2.17.2: Internal reset OFF*).
2. Guaranteed by characterization results.
3. V_{REF+} is internally connected to V_{DDA} and V_{REF-} is internally connected to V_{SSA}.
4. R_{ADC} maximum value is given for V_{DD}=1.7 V, and minimum value for V_{DD}=3.3 V.
5. For external triggers, a delay of $1/f_{PCLK2}$ must be added to the latency specified in *Table 62*.

Equation 1: R_{AIN} max formula

$$R_{AIN} = \frac{(k-0.5)}{f_{ADC} \times C_{ADC} \times \ln(2^{N+2})} - R_{ADC}$$

The formula above (*Equation 1*) is used to determine the maximum external impedance allowed for an error below 1/4 of LSB. N = 12 (from 12-bit resolution) and k is the number of sampling periods defined in the ADC_SMPR1 register.

Table 63. ADC static accuracy at f_{ADC} = 18 MHz

Symbol	Parameter	Test conditions	Typ	Max(1)	Unit
ET	Total unadjusted error	f_{ADC} =18 MHz V_{DDA} = 1.7 to 3.6 V V_{REF} = 1.7 to 3.6 V $V_{DDA} - V_{REF}$ < 1.2 V	±3	±4	LSB
EO	Offset error		±2	±3	
EG	Gain error		±1	±3	
ED	Differential linearity error		±1	±2	
EL	Integral linearity error		±2	±3	

1. Guaranteed by characterization results.

Table 64. ADC static accuracy at f_{ADC} = 30 MHz

Symbol	Parameter	Test conditions	Typ	Max(1)	Unit
ET	Total unadjusted error	f_{ADC} = 30 MHz, R_{AIN} < 10 kΩ, V_{DDA} = 2.4 to 3.6 V, V_{REF} = 1.7 to 3.6 V, $V_{DDA} - V_{REF}$ < 1.2 V	±2	±5	LSB
EO	Offset error		±1.5	±2.5	
EG	Gain error		±1.5	±4	
ED	Differential linearity error		±1	±2	
EL	Integral linearity error		±1.5	±3	

1. Guaranteed by characterization results.

Table 65. ADC static accuracy at f_{ADC} = 36 MHz

Symbol	Parameter	Test conditions	Typ	Max(1)	Unit
ET	Total unadjusted error	f_{ADC} =36 MHz, V_{DDA} = 2.4 to 3.6 V, V_{REF} = 1.7 to 3.6 V V_{DDA} –V_{REF} < 1.2 V	±4	±7	LSB
EO	Offset error		±2	±3	
EG	Gain error		±3	±6	
ED	Differential linearity error		±2	±3	
EL	Integral linearity error		±3	±6	

1. Guaranteed by characterization results.

Table 66. ADC dynamic accuracy at f_{ADC} = 18 MHz - limited test conditions(1)

Symbol	Parameter	Test conditions	Min	Typ	Max	Unit
ENOB	Effective number of bits	f_{ADC} =18 MHz V_{DDA} = V_{REF+}= 1.7 V Input Frequency = 20 KHz Temperature = 25 °C	10.3	10.4	-	bits
SINAD	Signal-to-noise and distortion ratio		64	64.2	-	dB
SNR	Signal-to-noise ratio		64	65	-	
THD	Total harmonic distortion		− 67	− 72	-	

1. Guaranteed by characterization results.

Table 67. ADC dynamic accuracy at f_{ADC} = 36 MHz - limited test conditions(1)

Symbol	Parameter	Test conditions	Min	Typ	Max	Unit
ENOB	Effective number of bits	f_{ADC} =36 MHz V_{DDA} = V_{REF+} = 3.3 V Input Frequency = 20 KHz Temperature = 25 °C	10.6	10.8	-	bits
SINAD	Signal-to noise and distortion ratio		66	67	-	dB
SNR	Signal-to noise ratio		64	68	-	
THD	Total harmonic distortion		− 70	− 72	-	

1. Guaranteed by characterization results.

Note: ADC accuracy vs. negative injection current: injecting a negative current on any analog input pins should be avoided as this significantly reduces the accuracy of the conversion being performed on another analog input. It is recommended to add a Schottky diode (pin to ground) to analog pins which may potentially inject negative currents.

Any positive injection current within the limits specified for $I_{INJ(PIN)}$ and $\Sigma I_{INJ(PIN)}$ in *Section 5.3.17* does not affect the ADC accuracy.

Figure 41. ADC accuracy characteristics

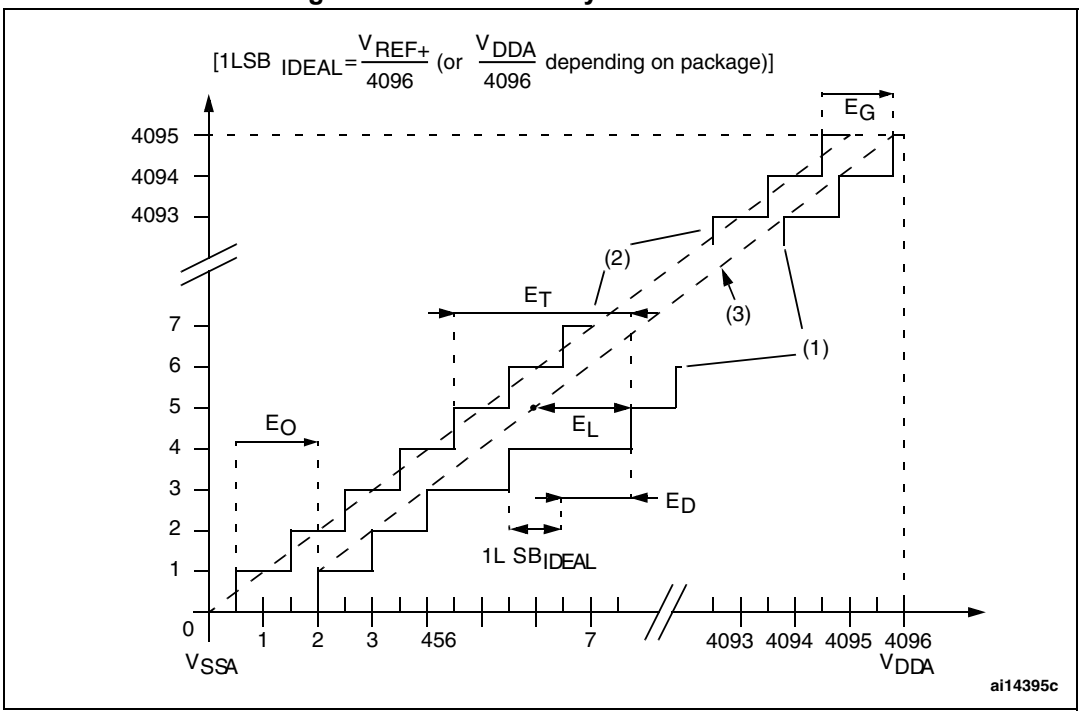

1. See also *Table 64*.
2. Example of an actual transfer curve.
3. Ideal transfer curve.
4. End point correlation line.
5. E_T = Total Unadjusted Error: maximum deviation between the actual and the ideal transfer curves.
   EO = Offset Error: deviation between the first actual transition and the first ideal one.
   EG = Gain Error: deviation between the last ideal transition and the last actual one.
   ED = Differential Linearity Error: maximum deviation between actual steps and the ideal one.
   EL = Integral Linearity Error: maximum deviation between any actual transition and the end point correlation line.

Figure 42. Typical connection diagram using the ADC

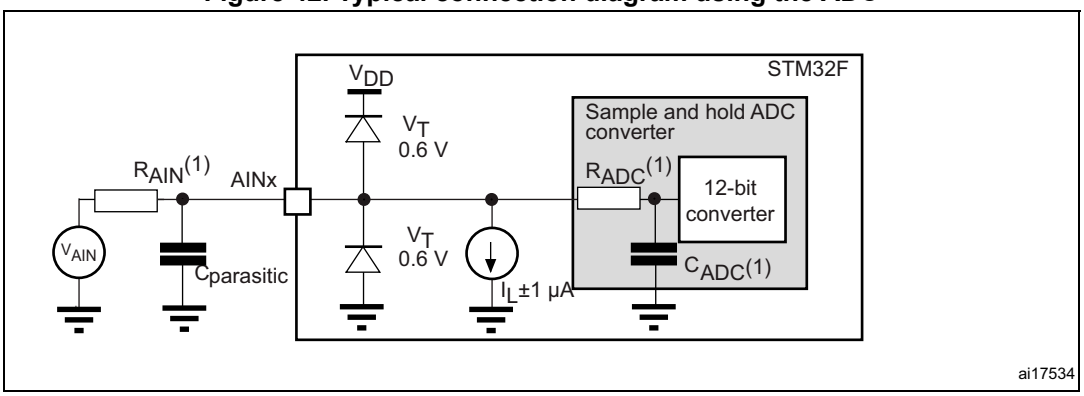

1. Refer to *Table 62* for the values of R_{AIN}, R_{ADC} and C_{ADC}.
2. $C_{parasitic}$ represents the capacitance of the PCB (dependent on soldering and PCB layout quality) plus the pad capacitance (roughly 5 pF). A high $C_{parasitic}$ value downgrades conversion accuracy. To remedy this, f_{ADC} should be reduced.

General PCB design guidelines

Power supply decoupling should be performed as shown in *Figure 43* or *Figure 44*, depending on whether V_{REF+} is connected to V_{DDA} or not. The 10 nF capacitors should be ceramic (good quality). They should be placed them as close as possible to the chip.

Figure 43. Power supply and reference decoupling (V_{REF+} not connected to V_{DDA})

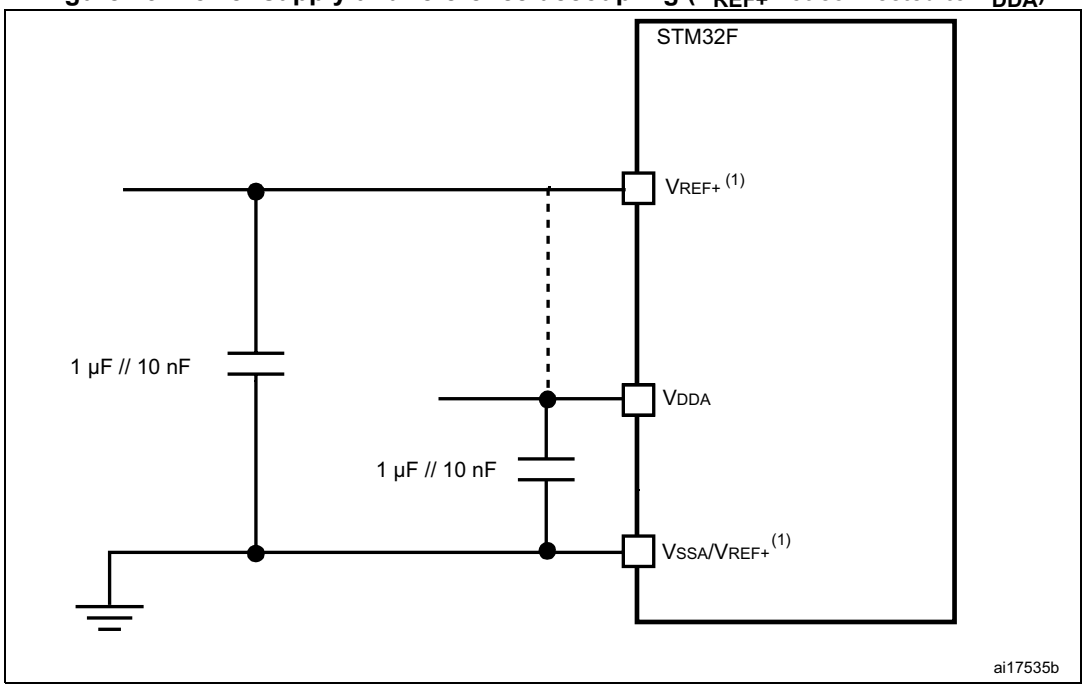

1. V_{REF+} input is available on all the packages except TFBGA100 whereas the V_{REF-} is available only on UFBGA176 and TFBGA216. When V_{REF-} is not available, it is internally connected to V_{DDA} and V_{SSA}.

Figure 44. Power supply and reference decoupling (V_{REF+} connected to V_{DDA})

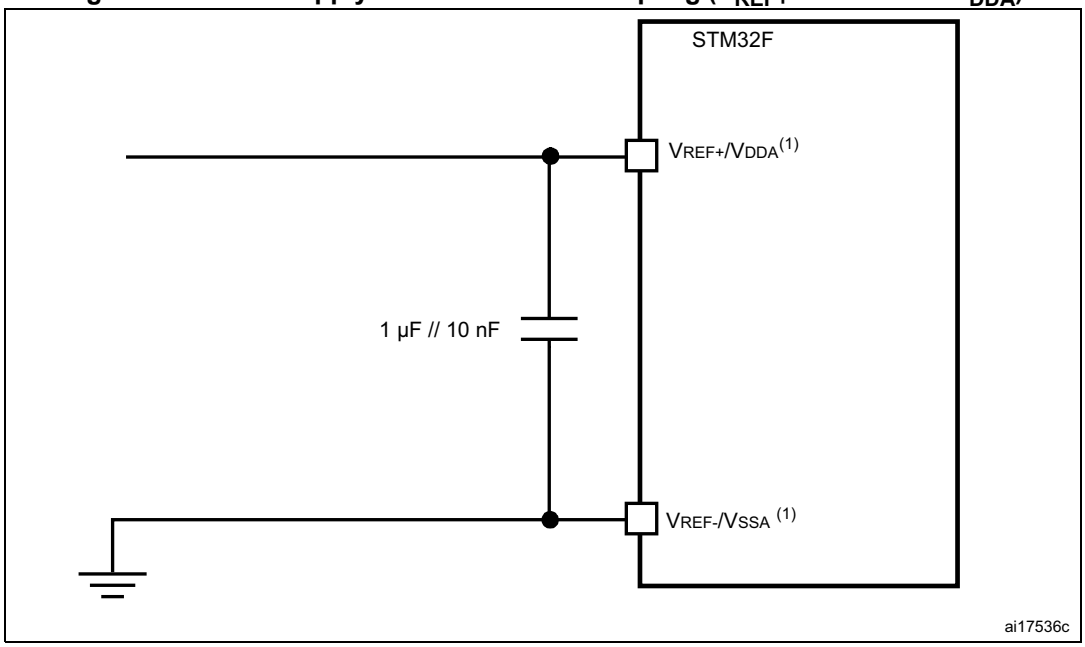

1. V_{REF+} input is available on all the packages except TFBGA100, whereas the V_{REF-} is available only on UFBGA176 and TFBGA216. When V_{REF-} is not available, it is internally connected to V_{DDA} and V_{SSA}.

5.3.22 Temperature sensor characteristics

Table 68. Temperature sensor characteristics

Symbol	Parameter	Min	Typ	Max	Unit
T_L(1)	V_{SENSE} linearity with temperature	-	±1	±2	°C
Avg_Slope(1)	Average slope	-	2.5	-	mV/°C
V_{25}(1)	Voltage at 25 °C	-	0.76	-	V
t_{START}(2)	Startup time	-	6	10	µs
T_{S_temp}(2)	ADC sampling time when reading the temperature (1 °C accuracy)	10	-	-	µs

1. Guaranteed by characterization results.
2. Guaranteed by design.

Table 69. Temperature sensor calibration values

Symbol	Parameter	Memory address
TS_CAL1	TS ADC raw data acquired at temperature of 30 °C, V_{DDA}= 3.3 V	0x1FF0 F44C - 0x1FF0 F44D
TS_CAL2	TS ADC raw data acquired at temperature of 110 °C, V_{DDA}= 3.3 V	0x1FF0 F44E - 0x1FF0 F44F

5.3.23 V_{BAT} monitoring characteristics

Table 70. V_{BAT} monitoring characteristics

Symbol	Parameter	Min	Typ	Max	Unit
R	Resistor bridge for V_{BAT}	-	50	-	KΩ
Q	Ratio on V_{BAT} measurement	-	4	-	-
Er(1)	Error on Q	–1	-	+1	%
T_{S_vbat}(2)(2)	ADC sampling time when reading the V_{BAT} 1 mV accuracy	5	-	-	µs

1. Guaranteed by design.
2. Shortest sampling time can be determined in the application by multiple iterations.

5.3.24 Reference voltage

The parameters given in *Table 71* are derived from tests performed under ambient temperature and V_{DD} supply voltage conditions summarized in *Table 17*.

Table 71. internal reference voltage

Symbol	Parameter	Conditions	Min	Typ	Max	Unit
V_{REFINT}	Internal reference voltage	–40 °C < T_A < +105 °C	1.18	1.21	1.24	V
$T_{S_vrefint}$(1)	ADC sampling time when reading the internal reference voltage	-	10	-	-	µs
V_{RERINT_s}(2)	Internal reference voltage spread over the temperature range	V_{DD} = 3V ± 10mV	-	3	5	mV

Table 71. internal reference voltage (continued)

Symbol	Parameter	Conditions	Min	Typ	Max	Unit
T_{Coeff}(2)	Temperature coefficient	-	-	30	50	ppm/°C
t_{START}(2)	Startup time	-	-	6	10	µs

1. Shortest sampling time can be determined in the application by multiple iterations.
2. Guaranteed by design.

Table 72. Internal reference voltage calibration values

Symbol	Parameter	Memory address
V_{REFIN_CAL}	Raw data acquired at temperature of 30 °C V_{DDA} = 3.3 V	0x1FF0 F44A - 0x1FF0 F44B

5.3.25 DAC electrical characteristics

Table 73. DAC characteristics

Symbol	Parameter	Min	Typ	Max	Unit	Comments
V_{DDA}	Analog supply voltage	1.7(1)	-	3.6	V	-
V_{REF+}	Reference supply voltage	1.7(1)	-	3.6	V	$V_{REF+} \leq V_{DDA}$
V_{SSA}	Ground	0	-	0	V	-
R_{LOAD}(2)	Resistive load with buffer ON	5	-	-	kΩ	-
R_O(2)	Impedance output with buffer OFF	-	-	15	kΩ	When the buffer is OFF, the Minimum resistive load between DAC_OUT and V_{SS} to have a 1% accuracy is 1.5 MΩ
C_{LOAD}(2)	Capacitive load	-	-	50	pF	Maximum capacitive load at DAC_OUT pin (when the buffer is ON).
DAC_OUT min(2)	Lower DAC_OUT voltage with buffer ON	0.2	-	-	V	It gives the maximum output excursion of the DAC. It corresponds to 12-bit input code (0x0E0) to (0xF1C) at V_{REF+} = 3.6 V and (0x1C7) to (0xE38) at V_{REF+} = 1.7 V
DAC_OUT max(2)	Higher DAC_OUT voltage with buffer ON	-	-	V_{DDA} – 0.2	V	
DAC_OUT min(2)	Lower DAC_OUT voltage with buffer OFF	-	0.5	-	mV	It gives the maximum output excursion of the DAC.
DAC_OUT max(2)	Higher DAC_OUT voltage with buffer OFF	-	-	V_{REF+} – 1LSB	V	
I_{VREF+}(4)	DAC DC V_{REF} current consumption in quiescent mode (Standby mode)	-	170	240	µA	With no load, worst code (0x800) at V_{REF+} = 3.6 V in terms of DC consumption on the inputs
		-	50	75		With no load, worst code (0xF1C) at V_{REF+} = 3.6 V in terms of DC consumption on the inputs

Table 73. DAC characteristics (continued)

Symbol	Parameter	Min	Typ	Max	Unit	Comments
I_{DDA}(4)	DAC DC V_{DDA} current consumption in quiescent mode(3)	-	280	380	µA	With no load, middle code (0x800) on the inputs
		-	475	625	µA	With no load, worst code (0xF1C) at V_{REF+} = 3.6 V in terms of DC consumption on the inputs
DNL(4)	Differential non linearity Difference between two consecutive code-1LSB)	-	-	±0.5	LSB	Given for the DAC in 10-bit configuration.
		-	-	±2	LSB	Given for the DAC in 12-bit configuration.
INL(4)	Integral non linearity (difference between measured value at Code i and the value at Code i on a line drawn between Code 0 and last Code 1023)	-	-	±1	LSB	Given for the DAC in 10-bit configuration.
		-	-	±4	LSB	Given for the DAC in 12-bit configuration.
Offset(4)	Offset error (difference between measured value at Code (0x800) and the ideal value = $V_{REF+}/2$)	-	-	±10	mV	Given for the DAC in 12-bit configuration
		-	-	±3	LSB	Given for the DAC in 10-bit at V_{REF+} = 3.6 V
		-	-	±12	LSB	Given for the DAC in 12-bit at V_{REF+} = 3.6 V
Gain error(4)	Gain error	-	-	±0.5	%	Given for the DAC in 12-bit configuration
$t_{SETTLING}$(4)	Settling time (full scale: for a 10-bit input code transition between the lowest and the highest input codes when DAC_OUT reaches final value ±4LSB	-	3	6	µs	$C_{LOAD} \leq 50$ pF, $R_{LOAD} \geq 5$ kΩ
THD(4)	Total Harmonic Distortion Buffer ON	-	-	-	dB	$C_{LOAD} \leq 50$ pF, $R_{LOAD} \geq 5$ kΩ
Update rate(2)	Max frequency for a correct DAC_OUT change when small variation in the input code (from code i to i+1LSB)	-	-	1	MS/s	$C_{LOAD} \leq 50$ pF, $R_{LOAD} \geq 5$ kΩ
t_{WAKEUP}(4)	Wakeup time from off state (Setting the ENx bit in the DAC Control register)	-	6.5	10	µs	$C_{LOAD} \leq 50$ pF, $R_{LOAD} \geq 5$ kΩ input code between lowest and highest possible ones.
PSRR+ (2)	Power supply rejection ratio (to V_{DDA}) (static DC measurement)	-	–67	–40	dB	No R_{LOAD}, C_{LOAD} = 50 pF

1. V_{DDA} minimum value of 1.7 V is obtained with the use of an external power supply supervisor (refer to *Section 2.17.2: Internal reset OFF*).
2. Guaranteed by design.
3. The quiescent mode corresponds to a state where the DAC maintains a stable output level to ensure that no dynamic consumption occurs.
4. Guaranteed by characterization results.

Figure 45. 12-bit buffered /non-buffered DAC

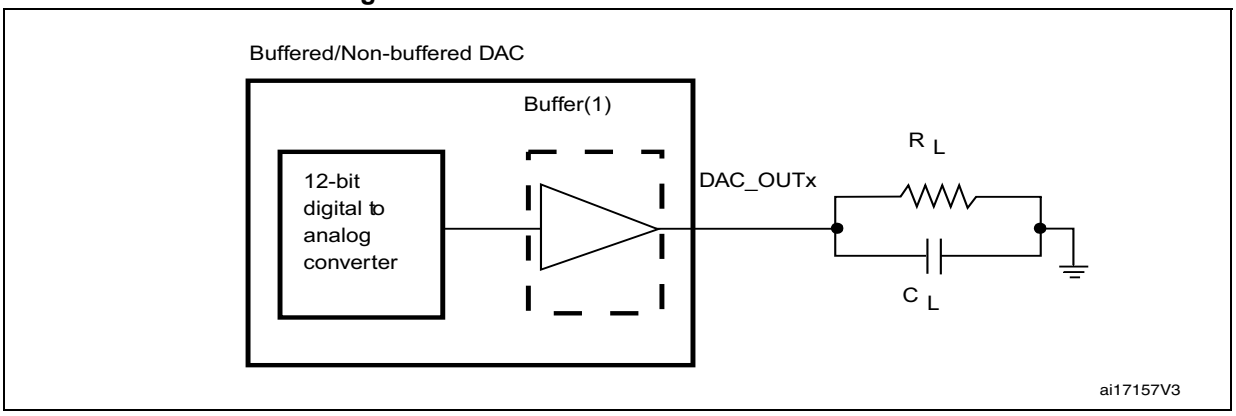

1. The DAC integrates an output buffer that can be used to reduce the output impedance and to drive external loads directly without the use of an external operational amplifier. The buffer can be bypassed by configuring the BOFFx bit in the DAC_CR register.

5.3.26 Communications interfaces

I²C interface characteristics

The I²C interface meets the timings requirements of the I²C-bus specification and user manual rev. 03 for:

- Standard-mode (Sm): with a bit rate up to 100 kbit/s
- Fast-mode (Fm): with a bit rate up to 400 kbit/s.
- Fast-mode Plus (Fm+): with a bit rate up to 1Mbit/s.

The I²C timings requirements are guaranteed by design when the I2C peripheral is properly configured (refer to RM0385 reference manual) and when the I2CCLK frequency is greater than the minimum shown in the table below:

Table 74. Minimum I2CCLK frequency in all I2C modes

Symbol	Parameter	Condition		Min	Unit
f(I2CCLK)	I2CCLK frequency	Standard-mode		2	MHz
		Fast-mode	Analog Filtre ON DNF=0	10	
			Analog Filtre OFF DNF=1	9	
		Fast-mode Plus	Analog Filtre ON DNF=0	22.5	
			Analog Filtre OFF DNF=1	16	

The SDA and SCL I/O requirements are met with the following restrictions: the SDA and SCL I/O pins are not “true” open-drain. When configured as open-drain, the PMOS connected between the I/O pin and V_{DD} is disabled, but is still present.

The 20mA output drive requirement in Fast-mode Plus is not supported. This limits the maximum load Cload supported in Fm+, which is given by these formulas:

- $Tr(SDA/SCL)=0.8473xR_pxC_{load}$
- $R_p(min)= (VDD-V_{OL}(max))/I_{OL}(max)$

Where Rp is the I2C lines pull-up. Refer to *Section 5.3.17: I/O port characteristics* for the I2C I/Os characteristics.

All I^2C SDA and SCL I/Os embed an analog filter. Refer to the table below for the analog filter characteristics:

Table 75. I2C analog filter characteristics(1)

Symbol	Parameter	Min	Max	Unit
t_{AF}	Maximum pulse width of spikes that are suppressed by the analog filter	50(2)	150(3)	ns

1. Guaranteed by characterization results.
2. Spikes with widths below $t_{AF(min)}$ are filtered.
3. Spikes with widths above $t_{AF(max)}$ are not filtered

SPI interface characteristics

Unless otherwise specified, the parameters given in *Table 76* for the SPI interface are derived from tests performed under the ambient temperature, f_{PCLKx} frequency and V_{DD} supply voltage conditions summarized in *Table 17*, with the following configuration:

- Output speed is set to OSPEEDRy[1:0] = 11
- Capacitive load C = 30 pF
- Measurement points are done at CMOS levels: $0.5V_{DD}$

Refer to *Section 5.3.17: I/O port characteristics* for more details on the input/output alternate function characteristics (NSS, SCK, MOSI, MISO for SPI).

Table 76. SPI dynamic characteristics(1)

Symbol	Parameter	Conditions	Min	Typ	Max	Unit
f_{SCK} $1/t_{c(SCK)}$	SPI clock frequency	Master mode SPI1,4,5,6 2.7≤VDD≤3.6	-	-	54(2)	MHz
		Master mode SPI1,4,5,6 1.71≤VDD≤3.6			27	
		Master transmitter mode SPI1,4,5,6 1.71≤VDD≤3.6			54	
		Slave receiver mode SPI1,4,5,6 1.71≤VDD≤3.6			54	
		Slave mode transmitter/full duplex SPI1,4,5,6 2.7≤VDD≤3.6			50(3)	
		Slave mode transmitter/full duplex SPI1,4,5,6 1.71≤VDD≤3.6			38(3)	
		Master & Slave mode SPI2,3 1.71≤VDD≤3.6			27	
tsu(NSS)	NSS setup time	Slave mode, SPI presc = 2	4*Tpclk	-	-	ns
th(NSS)	NSS hold time	Slave mode, SPI presc = 2	2*Tpclk	-	-	
tw(SCKH) tw(SCKL)	SCK high and low time	Master mode	Tpclk-2	Tpclk	Tpclk+2	

Table 76. SPI dynamic characteristics(1) (continued)

Symbol	Parameter	Conditions	Min	Typ	Max	Unit
tsu(MI)	Data input setup time	Master mode	5.5	-	-	ns
tsu(SI)		Slave mode	4	-	-	
th(MI)	Data input hold time	Master mode	4	-	-	
th(SI)		Slave mode	2	-	-	
ta(SO)	Data output access time	Slave mode	7	-	21	
tdis(SO)	Data output disable time	Slave mode	5	-	12	
tv(SO)	Data output valid time	Slave mode 2.7≤VDD≤3.6V	-	6.5	10	
		Slave mode 1.71≤VDD≤3.6V	-	6.5	13	
tv(MO)		Master mode	-	2	4	
th(SO)	Data output hold time	Slave mode 1.71≤VDD≤3.6V	5.5	-	-	
th(MO)		Master mode	0	-	-	

1. Guaranteed by characterization results.
2. Excepting SPI1 with SCK IO pin mapped on PA5. In this configuration, Maximum achievable frequency is 40MHz.
3. Maximum Frequency of Slave Transmitter is determined by sum of Tv(SO) and Tsu(MI) intervals which has to fit into SCK level phase preceding the SCK sampling edge.This value can be achieved when it communicates with a Master having Tsu(MI)=0 while signal Duty(SCK)=50%.

Figure 46. SPI timing diagram - slave mode and CPHA = 0

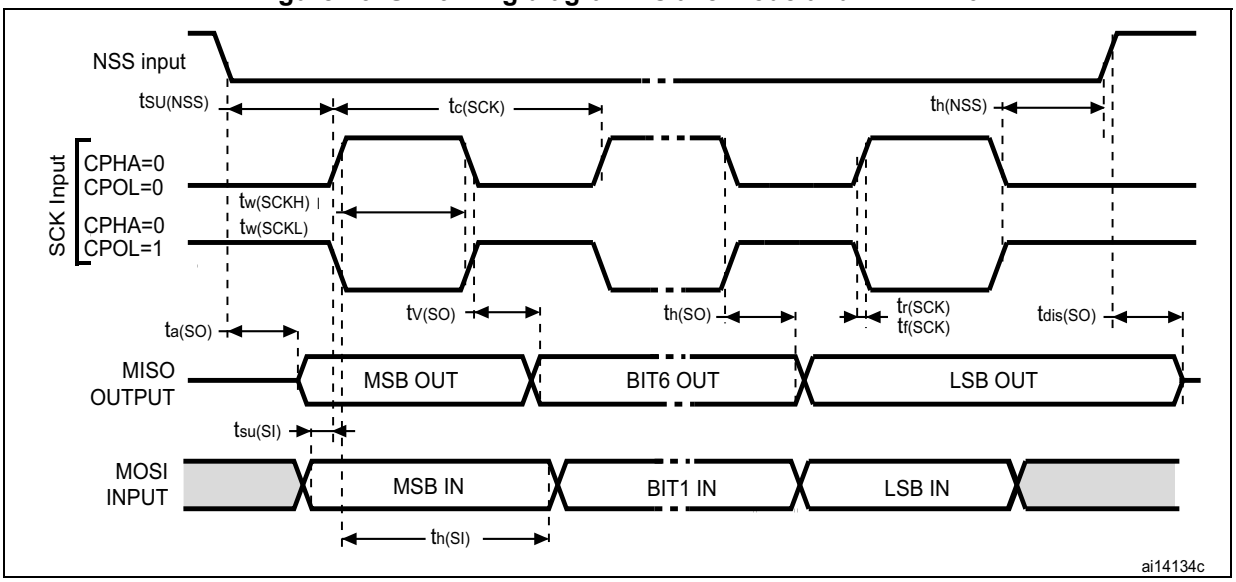

Figure 47. SPI timing diagram - slave mode and CPHA = 1

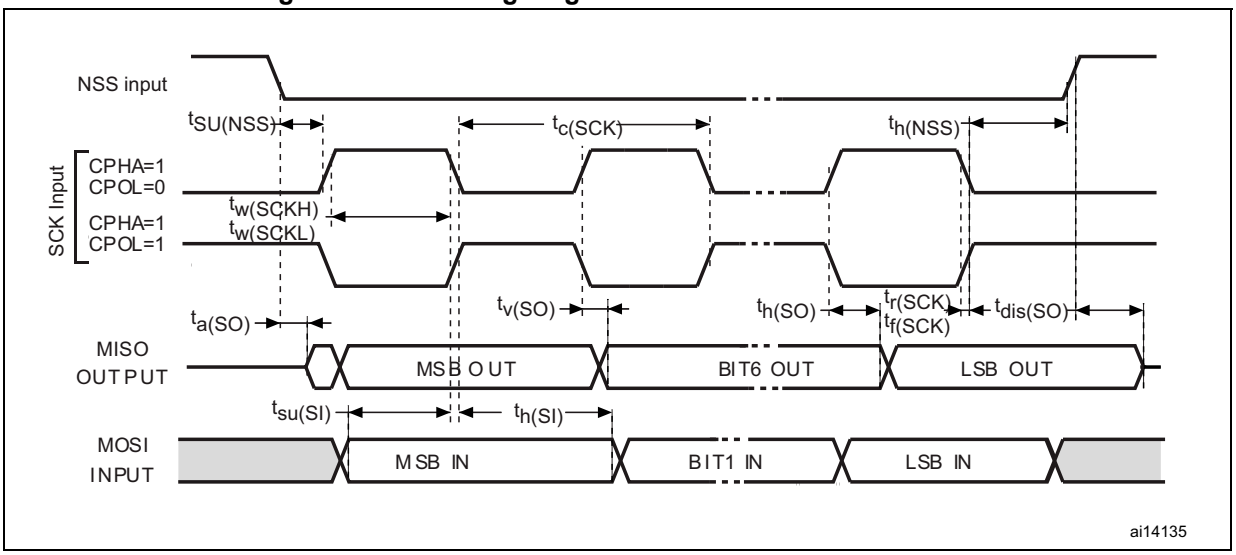

Figure 48. SPI timing diagram - master mode

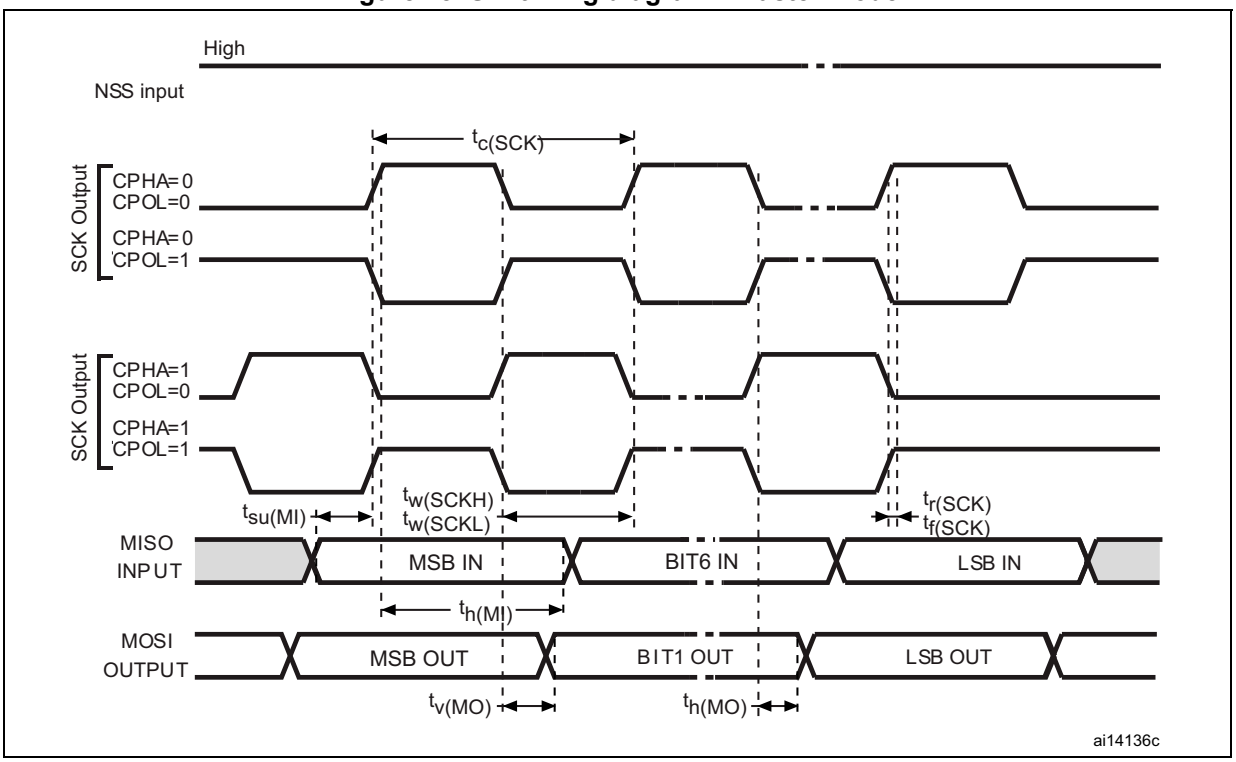

I²S interface characteristics

Unless otherwise specified, the parameters given in *Table 77* for the I²S interface are derived from tests performed under the ambient temperature, f_{PCLKx} frequency and V_{DD} supply voltage conditions summarized in *Table 17*, with the following configuration:

- Output speed is set to OSPEEDRy[1:0] = 10
- Capacitive load C = 30 pF
- Measurement points are done at CMOS levels: $0.5V_{DD}$

Refer to *Section 5.3.17: I/O port characteristics* for more details on the input/output alternate function characteristics (CK, SD, WS).

Table 77. I²S dynamic characteristics(1)

Symbol	Parameter	Conditions	Min	Max	Unit
f_{MCK}	I2S Main clock output	-	256x8K	256xFs(2)	MHz
f_{CK}	I2S clock frequency	Master data: 32 bits	-	64xFs	MHz
		Slave data: 32 bits	-	64xFs	
D_{CK}	I2S clock frequency duty cycle	Slave receiver	30	70	%
$t_{v(WS)}$	WS valid time	Master mode	-	5	ns
$t_{h(WS)}$	WS hold time	Master mode	0	-	
$t_{su(WS)}$	WS setup time	Slave mode	5	-	ns
		Slave mode PCM short pulse mode(3)	3	-	
$t_{h(WS)}$	WS hold time	Slave mode	0	-	
		Slave mode PCM short pulse mode(3)	2	-	
$t_{su(SD_MR)}$	Data input setup time	Master receiver	5	-	
$t_{su(SD_SR)}$		Slave receiver	1	-	
$t_{h(SD_MR)}$	Data input hold time	Master receiver	5	-	
$t_{h(SD_SR)}$		Slave receiver	1.5	-	
$t_{v(SD_ST)}$	Data output valid time	Slave transmitter (after enable edge)	-	16	
$t_{v(SD_MT)}$		Master transmitter (after enable edge)	-	3.5	
$t_{h(SD_ST)}$	Data output hold time	Slave transmitter (after enable edge)	5	-	
$t_{h(SD_MT)}$		Master transmitter (after enable edge)	0	-	

1. Guaranteed by characterization results.
2. The maximum value of 256xFs is 45 MHz (APB1 maximum frequency).
3. Measurement done with respect to I2S_CK rising edge.

Note: Refer to RM0385 reference manual I2S section for more details on the sampling frequency (F_S).

*f_{MCK}, f_{CK}, and D_{CK} values reflect only the digital peripheral behavior. The values of these parameters might be slightly impacted by the source clock precision. D_{CK} depends mainly on the value of ODD bit. The digital contribution leads to a minimum value of (I2SDIV/(2*I2SDIV+ODD) and a maximum value of (I2SDIV+ODD)/(2*I2SDIV+ODD). F_S maximum value is supported for each mode/condition.*

Figure 49. I²S slave timing diagram (Philips protocol)(1)

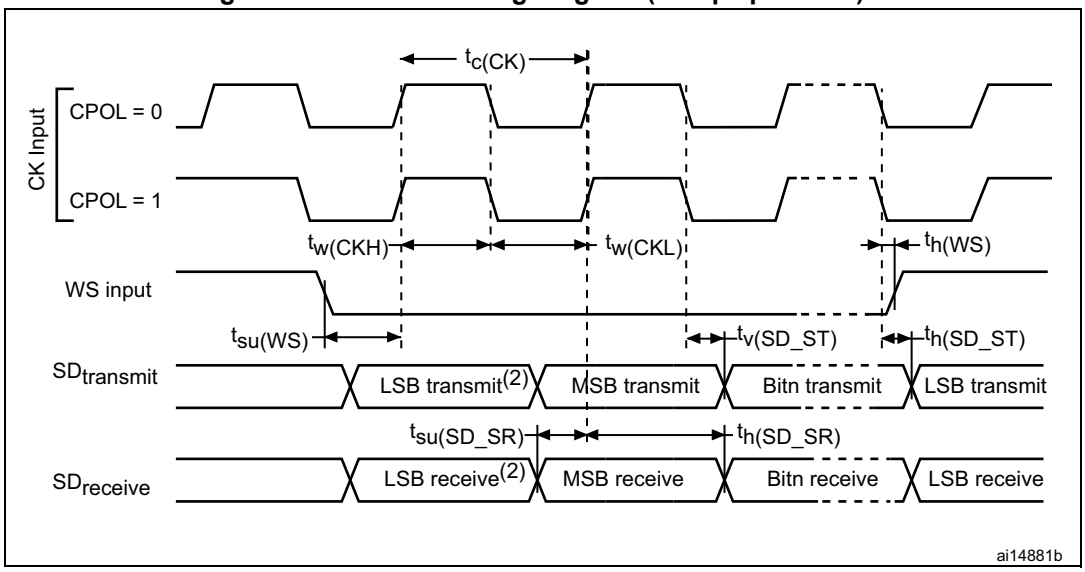

1. LSB transmit/receive of the previously transmitted byte. No LSB transmit/receive is sent before the first byte.

Figure 50. I²S master timing diagram (Philips protocol)(1)

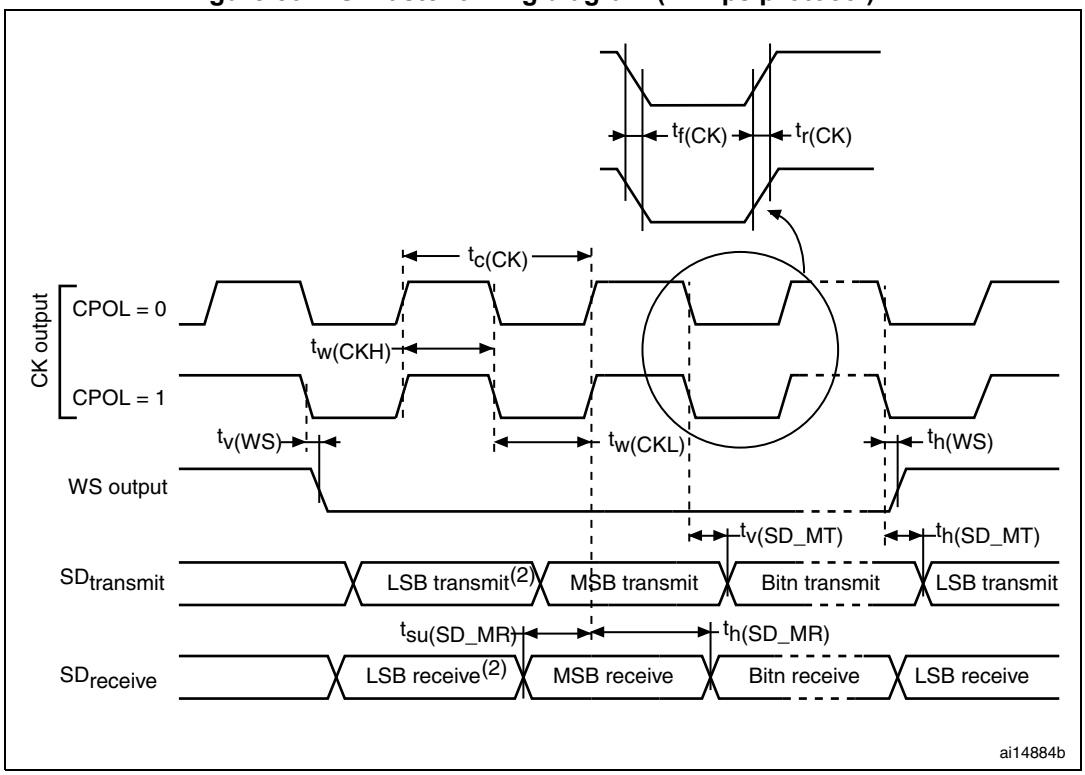

1. LSB transmit/receive of the previously transmitted byte. No LSB transmit/receive is sent before the first byte.

SAI characteristics

Unless otherwise specified, the parameters given in *Table 78* for SAI are derived from tests performed under the ambient temperature, f_{PCLKx} frequency and VDD supply voltage conditions summarized in *Table 17*, with the following configuration:

- Output speed is set to OSPEEDRy[1:0] = 10
- Capacitive load C=30 pF
- Measurement points are performed at CMOS levels: $0.5V_{DD}$

Refer to *Section 5.3.17: I/O port characteristics* for more details on the input/output alternate function characteristics (SCK,SD,WS).

Table 78. SAI characteristics(1)

Symbol	Parameter	Conditions	Min	Max	Unit
f_{MCKL}	SAI Main clock output	-	256 x 8K	256xFs(2)	MHz
F_{SCK}	SAI clock frequency	Master data: 32 bits	-	128xFs	MHz
		Slave data: 32 bits	-	128xFs	
D_{SCK}	SAI clock frequency duty cycle	Slave receiver	30	70	%
$t_{v(FS)}$	FS valid time	Master mode	8	22	ns
$t_{su(FS)}$	FS setup time	Slave mode	2	-	
$t_{h(FS)}$	FS hold time	Master mode	8	-	
		Slave mode	0	-	
$t_{su(SD_MR)}$	Data input setup time	Master receiver	5	-	
$t_{su(SD_SR)}$		Slave receiver	3	-	
$t_{h(SD_MR)}$	Data input hold time	Master receiver	0	-	
$t_{h(SD_SR)}$		Slave receiver	6	-	
$t_{v(SD_ST)}$ $t_{h(SD_ST)}$	Data output valid time	Slave transmitter (after enable edge)	-	15	
$t_{v(SD_MT)}$		Master transmitter (after enable edge)	-	20	
$t_{h(SD_MT)}$	Data output hold time	Master transmitter (after enable edge)	7	-	

1. Guaranteed by characterization results.
2. 256xFs maximum corresponds to 45 MHz (APB2 xaximum frequency)

Figure 51. SAI master timing waveforms

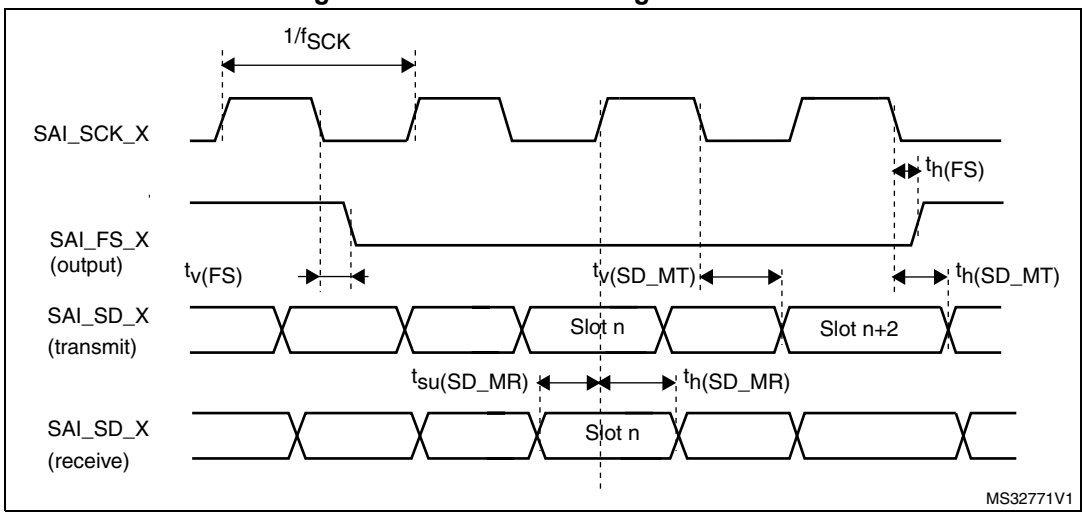

Figure 52. SAI slave timing waveforms

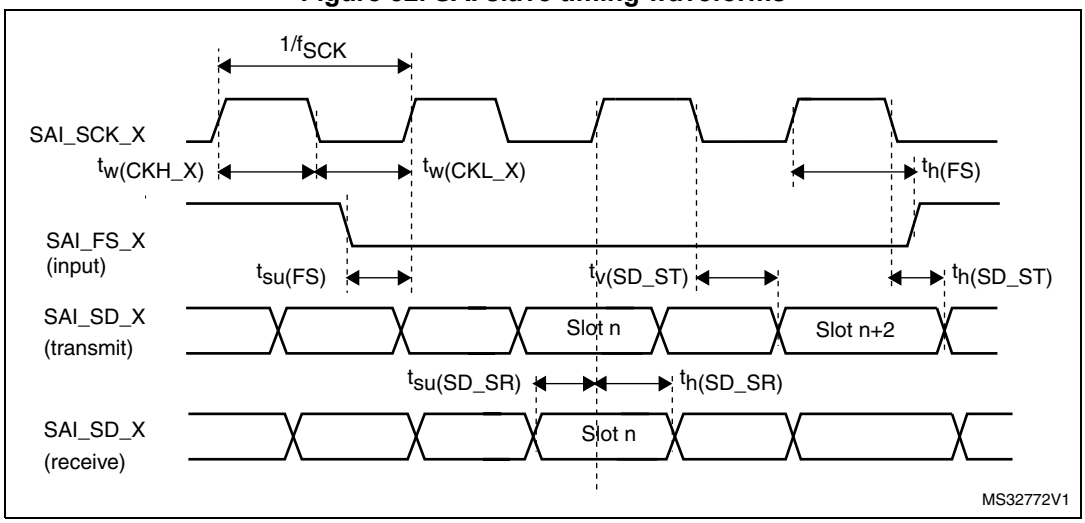

USB OTG full speed (FS) characteristics

This interface is present in both the USB OTG HS and USB OTG FS controllers.

Table 79. USB OTG full speed startup time

Symbol	Parameter	Max	Unit
$t_{STARTUP}$(1)	USB OTG full speed transceiver startup time	1	µs

1. Guaranteed by design.

Table 80. USB OTG full speed DC electrical characteristics

Symbol		Parameter	Conditions	Min. (1)	Typ.	Max. (1)	Unit
Input levels	V_{DDUSB}	USB OTG full speed transceiver operating voltage	-	3.0(2)	-	3.6	V
	V_{DI}(3)	Differential input sensitivity	I(USB_FS_DP/DM, USB_HS_DP/DM)	0.2	-	-	V
	V_{CM}(3)	Differential common mode range	Includes V_{DI} range	0.8	-	2.5	
	V_{SE}(3)	Single ended receiver threshold	-	1.3	-	2.0	
Output levels	V_{OL}	Static output level low	R_L of 1.5 kΩ to 3.6 V(4)	-	-	0.3	V
	V_{OH}	Static output level high	R_L of 15 kΩ to V_{SS}(4)	2.8	-	3.6	
R_{PD}		PA11, PA12, PB14, PB15 (USB_FS_DP/DM, USB_HS_DP/DM)	$V_{IN} = V_{DD}$	17	21	24	kΩ
		PA9, PB13 (OTG_FS_VBUS, OTG_HS_VBUS)		0.65	1.1	2.0	
R_{PU}		PA12, PB15 (USB_FS_DP, USB_HS_DP)	$V_{IN} = V_{SS}$	1.5	1.8	2.1	
		PA9, PB13 (OTG_FS_VBUS, OTG_HS_VBUS)	$V_{IN} = V_{SS}$	0.25	0.37	0.55	

1. All the voltages are measured from the local ground potential.
2. The USB OTG full speed transceiver functionality is ensured down to 2.7 V but not the full USB full speed electrical characteristics which are degraded in the 2.7-to-3.0 V V_{DDUSB} voltage range.
3. Guaranteed by design.
4. R_L is the load connected on the USB OTG full speed drivers.

Note: When VBUS sensing feature is enabled, PA9 and PB13 should be left at their default state (floating input), not as alternate function. A typical 200 µA current consumption of the sensing block (current to voltage conversion to determine the different sessions) can be observed on PA9 and PB13 when the feature is enabled.

Figure 53. USB OTG full speed timings: definition of data signal rise and fall time

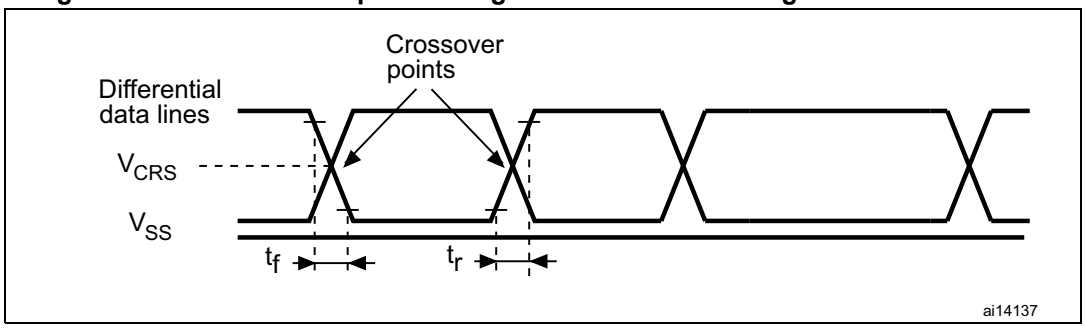

Table 81. USB OTG full speed electrical characteristics(1)

Driver characteristics					
Symbol	**Parameter**	**Conditions**	**Min**	**Max**	**Unit**
t_r	Rise time(2)	C_L = 50 pF	4	20	ns
t_f	Fall time(2)	C_L = 50 pF	4	20	ns
t_{rfm}	Rise/ fall time matching	t_r/t_f	90	110	%
V_{CRS}	Output signal crossover voltage	-	1.3	2.0	V
Z_{DRV}	Output driver impedance(3)	Driving high or low	28	44	Ω

1. Guaranteed by design.
2. Measured from 10% to 90% of the data signal. For more detailed informations, please refer to USB Specification - Chapter 7 (version 2.0).
3. No external termination series resistors are required on DP (D+) and DM (D-) pins since the matching impedance is included in the embedded driver.

USB high speed (HS) characteristics

Unless otherwise specified, the parameters given in *Table 84* for ULPI are derived from tests performed under the ambient temperature, f_{HCLK} frequency summarized in *Table 83* and V_{DD} supply voltage conditions summarized in *Table 82*, with the following configuration:

- Output speed is set to OSPEEDRy[1:0] = 11, unless otherwise specified
- Capacitive load C = 20 pF, unless otherwise specified
- Measurement points are done at CMOS levels: $0.5V_{DD}$.

Refer to *Section 5.3.17: I/O port characteristics* for more details on the input/output characteristics.

Table 82. USB HS DC electrical characteristics

Symbol		Parameter	Min.(1)	Max.(1)	Unit
Input level	V_{DD}	USB OTG HS operating voltage	1.7	3.6	V

1. All the voltages are measured from the local ground potential.

Table 83. USB HS clock timing parameters(1)

Symbol	Parameter		Min	Typ	Max	Unit
-	f_{HCLK} value to guarantee proper operation of USB HS interface		30	-	-	MHz
F_{START_8BIT}	Frequency (first transition)	8-bit ±10%	54	60	66	MHz
F_{STEADY}	Frequency (steady state) ±500 ppm		59.97	60	60.03	MHz
D_{START_8BIT}	Duty cycle (first transition)	8-bit ±10%	40	50	60	%
D_{STEADY}	Duty cycle (steady state) ±500 ppm		49.975	50	50.025	%
t_{STEADY}	Time to reach the steady state frequency and duty cycle after the first transition		-	-	1.4	ms
t_{START_DEV}	Clock startup time after the de-assertion of SuspendM	Peripheral	-	-	5.6	ms
t_{START_HOST}		Host	-	-	-	
t_{PREP}	PHY preparation time after the first transition of the input clock		-	-	-	µs

1. Guaranteed by design.

Figure 54. ULPI timing diagram

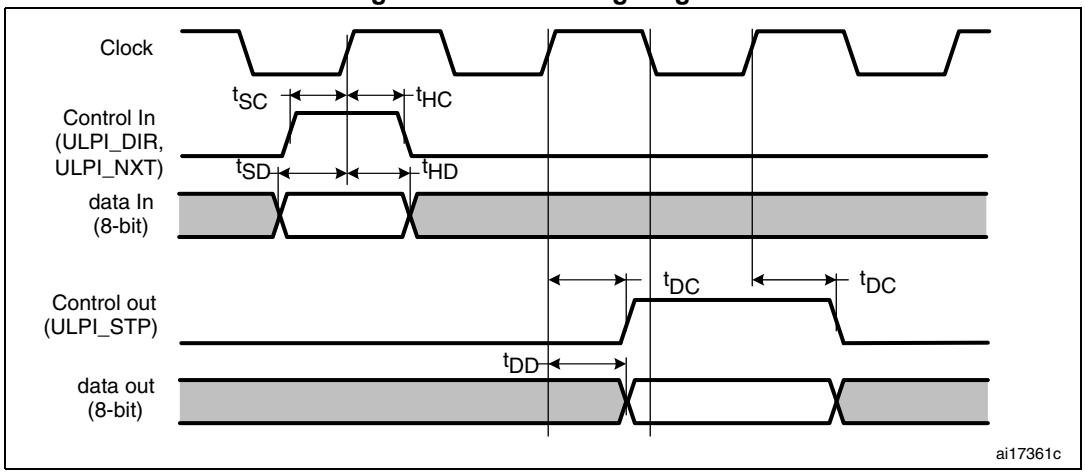

Table 84. Dynamic characteristics: USB ULPI(1)

Symbol	Parameter	Conditions	Min.	Typ.	Max.	Unit
t_{SC}	Control in (ULPI_DIR, ULPI_NXT) setup time	-	3	-	-	ns
t_{HC}	Control in (ULPI_DIR, ULPI_NXT) hold time	-	1	-	-	
t_{SD}	Data in setup time	-	1.5	-	-	
t_{HD}	Data in hold time	-	0.5	-	-	
t_{DC}/t_{DD}	Data/control output delay	2.7 V < V_{DD} < 3.6 V, C_L = 20 pF and OSPEEDRy[1:0] = 11	-	5.5	9	
		-	-	5.5	11.5	
		1.7 V < V_{DD} < 3.6 V, C_L = 15 pF and OSPEEDRy[1:0] = 11	-			

1. Guaranteed by characterization results.

Ethernet characteristics

Unless otherwise specified, the parameters given in *Table 85*, *Table 86* and *Table 87* for SMI, RMII and MII are derived from tests performed under the ambient temperature, f_{HCLK} frequency summarized in *Table 17* and V_{DD} supply voltage conditions summarized in *Table 85*, with the following configuration:

- Output speed is set to OSPEEDRy[1:0] = 10
- Capacitive load C = 20 pF
- Measurement points are done at CMOS levels: $0.5V_{DD}$.

Refer to *Section 5.3.17: I/O port characteristics* for more details on the input/output characteristics.

Table 85 gives the list of Ethernet MAC signals for the SMI (station management interface) and *Figure 55* shows the corresponding timing diagram.

Figure 55. Ethernet SMI timing diagram

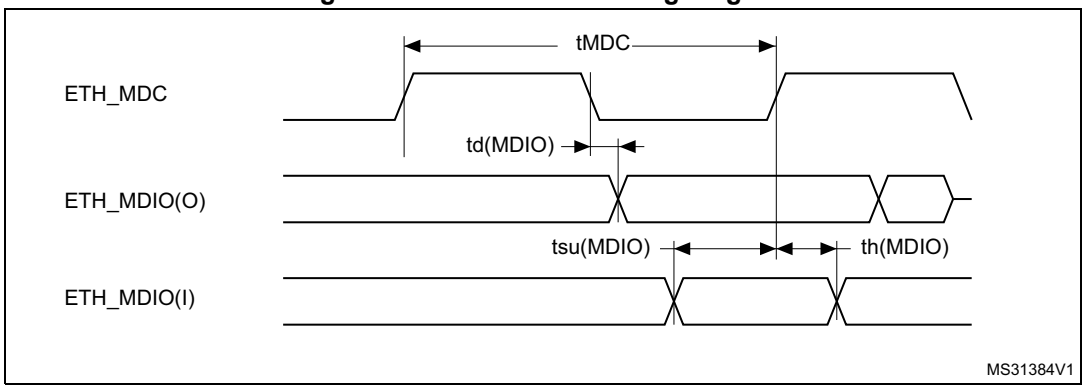

Table 85. Dynamics characteristics: Ethernet MAC signals for SMI(1)

Symbol	Parameter	Min	Typ	Max	Unit
t_{MDC}	MDC cycle time(2.38 MHz)	400	400	403	ns
$T_{d(MDIO)}$	Write data valid time	10	10.5	12.5	
$t_{su(MDIO)}$	Read data setup time	12.5	-	-	
$t_{h(MDIO)}$	Read data hold time	0	-	-	

1. Guaranteed by characterization results.

Table 86 gives the list of Ethernet MAC signals for the RMII and *Figure 56* shows the corresponding timing diagram.

Figure 56. Ethernet RMII timing diagram

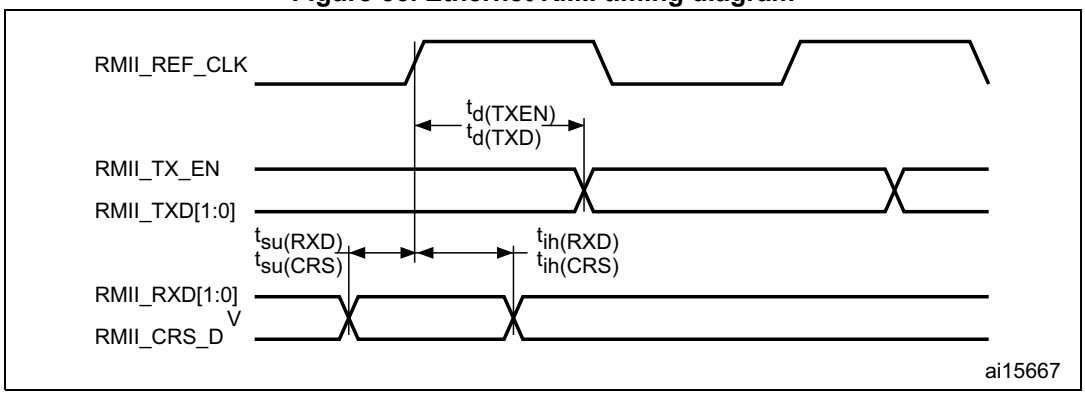

Table 86. Dynamics characteristics: Ethernet MAC signals for RMII(1)

Symbol	Parameter	Min	Typ	Max	Unit
$t_{su(RXD)}$	Receive data setup time	1	-	-	ns
$t_{ih(RXD)}$	Receive data hold time	1.5	-	-	
$t_{su(CRS)}$	Carrier sense setup time	1	-	-	
$t_{ih(CRS)}$	Carrier sense hold time	1	-	-	
$t_{d(TXEN)}$	Transmit enable valid delay time	5	6	10.5	
$t_{d(TXD)}$	Transmit data valid delay time	5	6	12	

1. Guaranteed by characterization results.

Table 87 gives the list of Ethernet MAC signals for MII and *Figure 56* shows the corresponding timing diagram.

Figure 57. Ethernet MII timing diagram

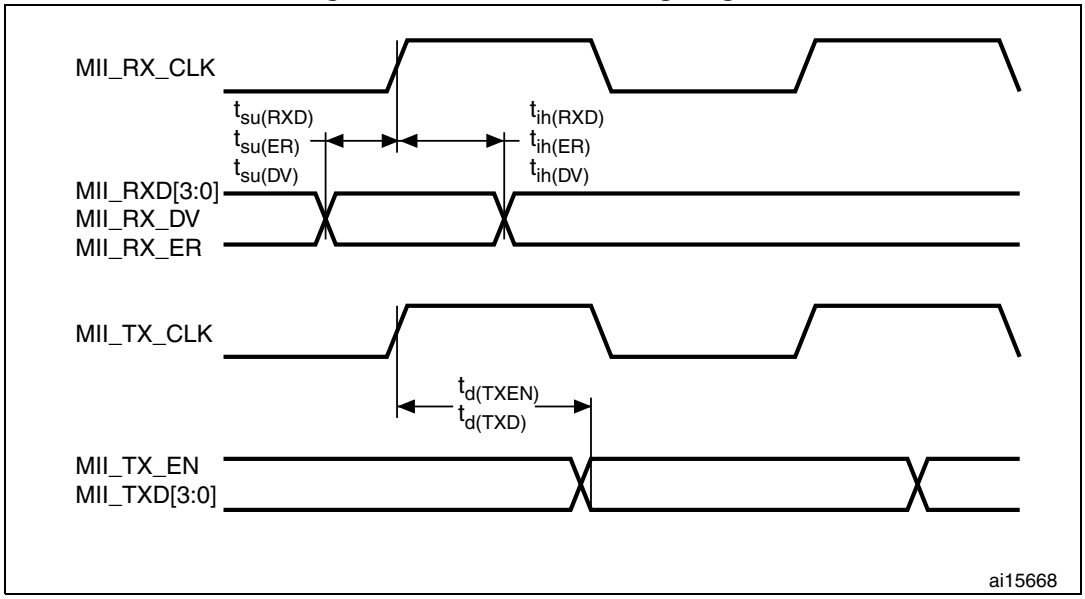

Table 87. Dynamics characteristics: Ethernet MAC signals for MII(1)

Symbol	Parameter	Min	Typ	Max	Unit
$t_{su(RXD)}$	Receive data setup time	3	-	-	ns
$t_{ih(RXD)}$	Receive data hold time	1.5	-	-	
$t_{su(DV)}$	Data valid setup time	0	-	-	
$t_{ih(DV)}$	Data valid hold time	1.5	-	-	
$t_{su(ER)}$	Error setup time	1.5	-	-	
$t_{ih(ER)}$	Error hold time	0.5	-	-	
$t_{d(TXEN)}$	Transmit enable valid delay time	6.5	7	13.5	
$t_{d(TXD)}$	Transmit data valid delay time	6.5	7	13.5	

1. Guaranteed by characterization results.

CAN (controller area network) interface

Refer to *Section 5.3.17: I/O port characteristics* for more details on the input/output alternate function characteristics (CANx_TX and CANx_RX).

5.3.27 FMC characteristics

Unless otherwise specified, the parameters given in *Table 88* to *Table 101* for the FMC interface are derived from tests performed under the ambient temperature, f_{HCLK} frequency and V_{DD} supply voltage conditions summarized in *Table 17*, with the following configuration:

- Output speed is set to OSPEEDRy[1:0] = 11
- Measurement points are done at CMOS levels: $0.5V_{DD}$

Refer to *Section 5.3.17: I/O port characteristics* for more details on the input/output characteristics.

Asynchronous waveforms and timings

Figure 58 through *Figure 61* represent asynchronous waveforms and *Table 88* through *Table 95* provide the corresponding timings. The results shown in these tables are obtained with the following FMC configuration:

- AddressSetupTime = 0x1
- AddressHoldTime = 0x1
- DataSetupTime = 0x1 (except for asynchronous NWAIT mode , DataSetupTime = 0x5)
- BusTurnAroundDuration = 0x0
- Capcitive load CL = 30 pF

In all timing tables, the T_{HCLK} is the HCLK clock period

Figure 58. Asynchronous non-multiplexed SRAM/PSRAM/NOR read waveforms

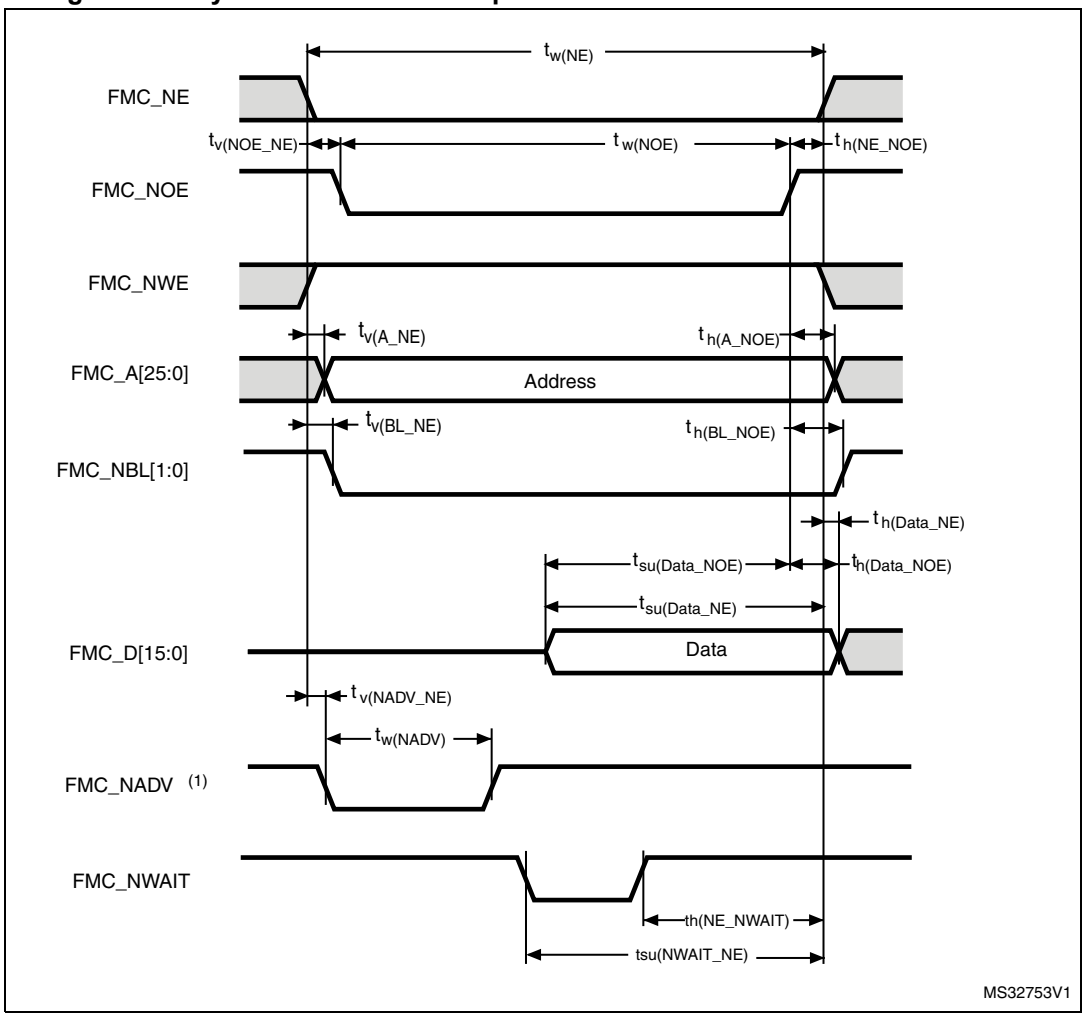

1. Mode 2/B, C and D only. In Mode 1, FMC_NADV is not used.

Table 88. Asynchronous non-multiplexed SRAM/PSRAM/NOR read timings(1)

Symbol	Parameter	Min	Max	Unit
$t_{w(NE)}$	FMC_NE low time	$2T_{HCLK}$− 0.5	2 T_{HCLK}+1.5	ns
$t_{v(NOE_NE)}$	FMC_NEx low to FMC_NOE low	0	1	
$t_{w(NOE)}$	FMC_NOE low time	$2T_{HCLK}$− 1	$2T_{HCLK}$+ 1	
$t_{h(NE_NOE)}$	FMC_NOE high to FMC_NE high hold time	0	-	
$t_{v(A_NE)}$	FMC_NEx low to FMC_A valid	-	0.5	
$t_{h(A_NOE)}$	Address hold time after FMC_NOE high	0	-	
$t_{v(BL_NE)}$	FMC_NEx low to FMC_BL valid	-	0.5	
$t_{h(BL_NOE)}$	FMC_BL hold time after FMC_NOE high	0	-	
$t_{su(Data_NE)}$	Data to FMC_NEx high setup time	T_{HCLK} - 2	-	
$t_{su(Data_NOE)}$	Data to FMC_NOEx high setup time	T_{HCLK} -2	-	
$t_{h(Data_NOE)}$	Data hold time after FMC_NOE high	0	-	
$t_{h(Data_NE)}$	Data hold time after FMC_NEx high	0	-	
$t_{v(NADV_NE)}$	FMC_NEx low to FMC_NADV low	-	0	
$t_{w(NADV)}$	FMC_NADV low time	-	T_{HCLK} +1	

1. C_L = 30 pF.

Table 89. Asynchronous non-multiplexed SRAM/PSRAM/NOR read - NWAIT timings(1)

Symbol	Parameter	Min	Max	Unit
$t_{w(NE)}$	FMC_NE low time	$7T_{HCLK}$ −1	$7T_{HCLK}$	ns
$t_{w(NOE)}$	FMC_NWE low time	$5T_{HCLK}$ −1	$5T_{HCLK}$ +1	
$t_{w(NWAIT)}$	FMC_NWAIT low time	T_{HCLK} −0.5		
$t_{su(NWAIT_NE)}$	FMC_NWAIT valid before FMC_NEx high	$5T_{HCLK}$ +1.5	-	
$t_{h(NE_NWAIT)}$	FMC_NEx hold time after FMC_NWAIT invalid	$4T_{HCLK}$+1	-	

1. Guaranteed by characterization results.

Figure 59. Asynchronous non-multiplexed SRAM/PSRAM/NOR write waveforms

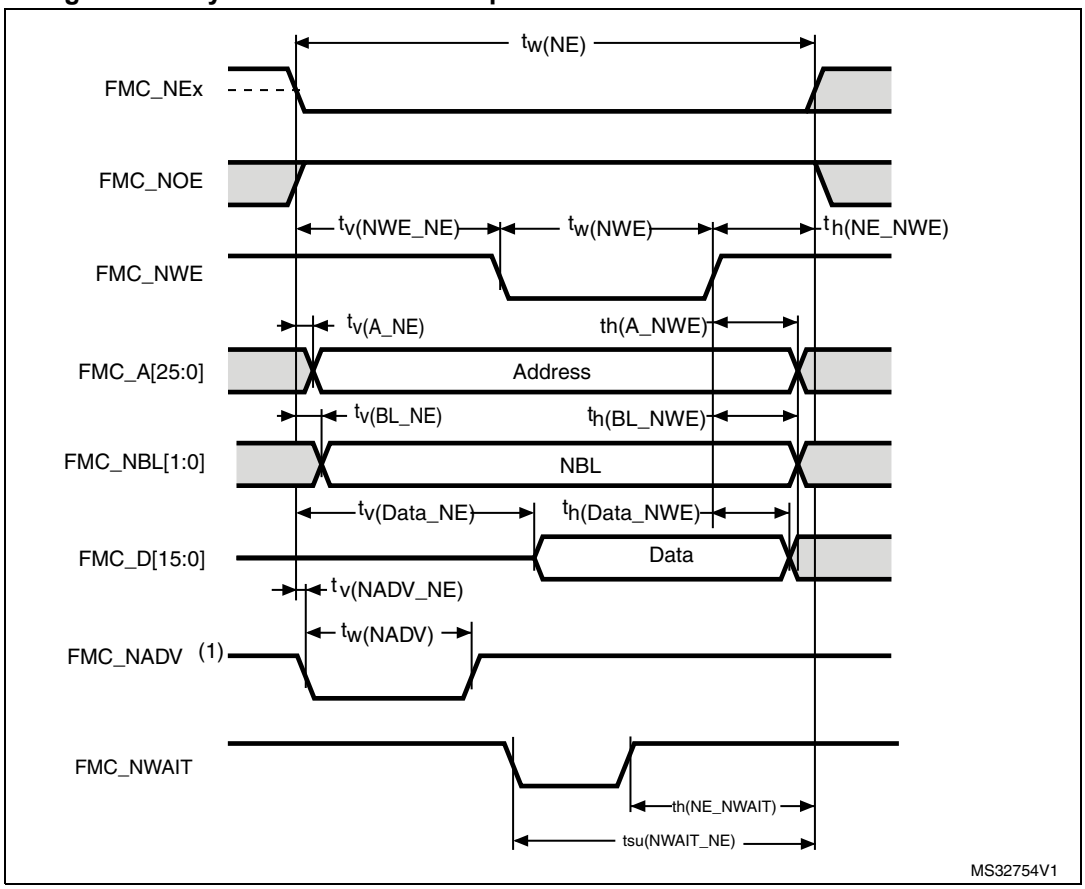

1. Mode 2/B, C and D only. In Mode 1, FMC_NADV is not used.

Table 90. Asynchronous non-multiplexed SRAM/PSRAM/NOR write timings(1)

Symbol	Parameter	Min	Max	Unit
$t_{w(NE)}$	FMC_NE low time	$3T_{HCLK}-0.5$	$3T_{HCLK}+1.5$	ns
$t_{v(NWE_NE)}$	FMC_NEx low to FMC_NWE low	$T_{HCLK}-0.5$	$T_{HCLK}+1$	
$t_{w(NWE)}$	FMC_NWE low time	$T_{HCLK}-0.5$	$T_{HCLK}+1$	
$t_{h(NE_NWE)}$	FMC_NWE high to FMC_NE high hold time	$T_{HCLK}-0.5$	-	
$t_{v(A_NE)}$	FMC_NEx low to FMC_A valid	-	0	
$t_{h(A_NWE)}$	Address hold time after FMC_NWE high	$T_{HCLK}-0.5$	-	
$t_{v(BL_NE)}$	FMC_NEx low to FMC_BL valid	-	0	
$t_{h(BL_NWE)}$	FMC_BL hold time after FMC_NWE high	$T_{HCLK}-0.5$	-	
$t_{v(Data_NE)}$	Data to FMC_NEx low to Data valid	-	$T_{HCLK}+3$	
$t_{h(Data_NWE)}$	Data hold time after FMC_NWE high	$T_{HCLK}+0.5$	-	
$t_{v(NADV_NE)}$	FMC_NEx low to FMC_NADV low	-	0	
$t_{w(NADV)}$	FMC_NADV low time	-	$T_{HCLK}+0.5$	

1. Guaranteed by characterization results.

Table 91. Asynchronous non-multiplexed SRAM/PSRAM/NOR write - NWAIT timings(1)

Symbol	Parameter	Min	Max	Unit
$t_{w(NE)}$	FMC_NE low time	$8T_{HCLK}-0.5$	$8T_{HCLK}+1.5$	ns
$t_{w(NWE)}$	FMC_NWE low time	$6T_{HCLK}-0.5$	$6T_{HCLK}+1$	
$t_{su(NWAIT_NE)}$	FMC_NWAIT valid before FMC_NEx high	$6T_{HCLK}-1$	-	
$t_{h(NE_NWAIT)}$	FMC_NEx hold time after FMC_NWAIT invalid	$4T_{HCLK}+2$	-	

1. Guaranteed by characterization results.

Figure 60. Asynchronous multiplexed PSRAM/NOR read waveforms

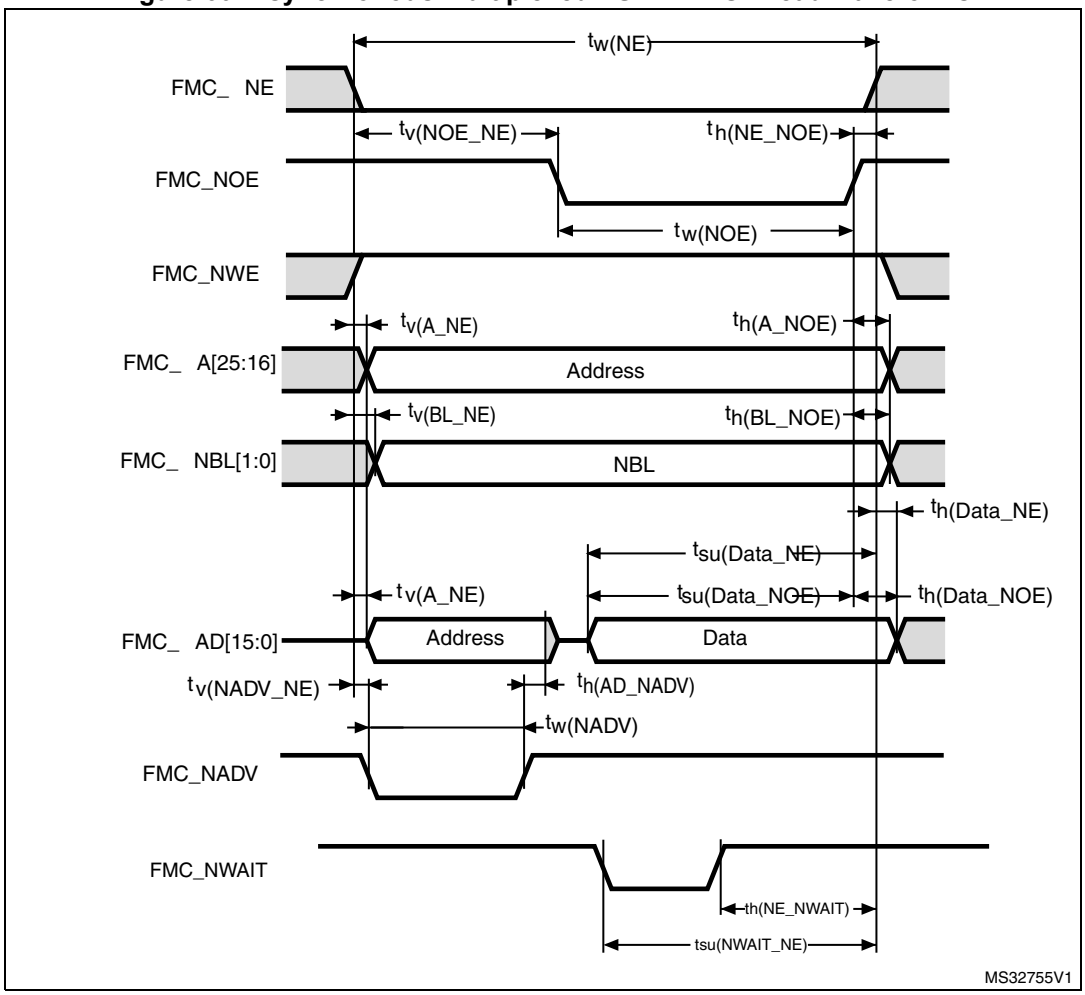

Table 92. Asynchronous multiplexed PSRAM/NOR read timings(1)

Symbol	Parameter	Min	Max	Unit
$t_{w(NE)}$	FMC_NE low time	$3T_{HCLK}-0.5$	$3T_{HCLK}+1.5$	ns
$t_{v(NOE_NE)}$	FMC_NEx low to FMC_NOE low	$2T_{HCLK}-1$	$2T_{HCLK}+0.5$	
$t_{tw(NOE)}$	FMC_NOE low time	$T_{HCLK}-0.5$	$T_{HCLK}+0.5$	
$t_{h(NE_NOE)}$	FMC_NOE high to FMC_NE high hold time	0	-	
$t_{v(A_NE)}$	FMC_NEx low to FMC_A valid	-	0.5	
$t_{v(NADV_NE)}$	FMC_NEx low to FMC_NADV low	0	0.5	
$t_{w(NADV)}$	FMC_NADV low time	$T_{HCLK}-0.5$	$T_{HCLK}+1.5$	
$t_{h(AD_NADV)}$	FMC_AD(address) valid hold time after FMC_NADV high)	0	-	
$t_{h(A_NOE)}$	Address hold time after FMC_NOE high	$T_{HCLK}-0.5$	-	
$t_{h(BL_NOE)}$	FMC_BL time after FMC_NOE high	0	-	
$t_{v(BL_NE)}$	FMC_NEx low to FMC_BL valid	-	0.5	
$t_{su(Data_NE)}$	Data to FMC_NEx high setup time	$T_{HCLK}-2$	-	
$t_{su(Data_NOE)}$	Data to FMC_NOE high setup time	$T_{HCLK}-2$	-	
$t_{h(Data_NE)}$	Data hold time after FMC_NEx high	0	-	
$t_{h(Data_NOE)}$	Data hold time after FMC_NOE high	0	-	

1. Guaranteed by characterization results.

Table 93. Asynchronous multiplexed PSRAM/NOR read-NWAIT timings(1)

Symbol	Parameter	Min	Max	Unit
$t_{w(NE)}$	FMC_NE low time	$8T_{HCLK}-1$	$8T_{HCLK}+2$	ns
$t_{w(NOE)}$	FMC_NWE low time	$5T_{HCLK}-1$	$5T_{HCLK}+1$	
$t_{su(NWAIT_NE)}$	FMC_NWAIT valid before FMC_NEx high	$5T_{HCLK}+1.5$	-	
$t_{h(NE_NWAIT)}$	FMC_NEx hold time after FMC_NWAIT invalid	$4T_{HCLK}+1$	-	

1. Guaranteed by characterization results.

Figure 61. Asynchronous multiplexed PSRAM/NOR write waveforms

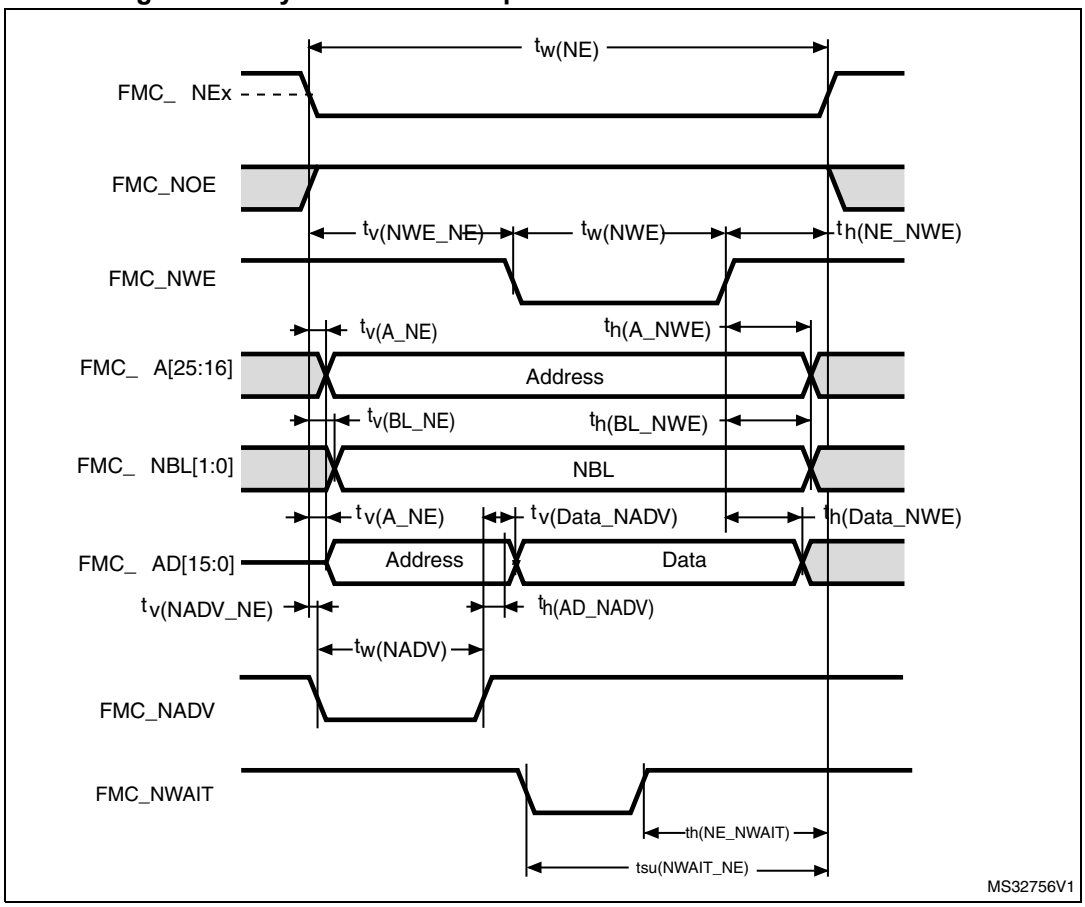

Table 94. Asynchronous multiplexed PSRAM/NOR write timings(1)

Symbol	Parameter	Min	Max	Unit
$t_{w(NE)}$	FMC_NE low time	$4T_{HCLK}-0.5$	$4T_{HCLK}+1.5$	ns
$t_{v(NWE_NE)}$	FMC_NEx low to FMC_NWE low	$T_{HCLK}-1$	$T_{HCLK}+0.5$	
$t_{w(NWE)}$	FMC_NWE low time	$2T_{HCLK}-0.5$	$2T_{HCLK}+0.5$	
$t_{h(NE_NWE)}$	FMC_NWE high to FMC_NE high hold time	T_{HCLK}	-	
$t_{v(A_NE)}$	FMC_NEx low to FMC_A valid	-	0	
$t_{v(NADV_NE)}$	FMC_NEx low to FMC_NADV low	0	0.5	
$t_{w(NADV)}$	FMC_NADV low time	$T_{HCLK}-0.5$	$T_{HCLK}+ 1.5$	
$t_{h(AD_NADV)}$	FMC_AD(adress) valid hold time after FMC_NADV high)	$T_{HCLK}-2$	-	
$t_{h(A_NWE)}$	Address hold time after FMC_NWE high	T_{HCLK}	-	
$t_{h(BL_NWE)}$	FMC_BL hold time after FMC_NWE high	$T_{HCLK}-2$	-	
$t_{v(BL_NE)}$	FMC_NEx low to FMC_BL valid	-	0	
$t_{v(Data_NADV)}$	FMC_NADV high to Data valid	-	$T_{HCLK}+2$	
$t_{h(Data_NWE)}$	Data hold time after FMC_NWE high	$T_{HCLK}+0.5$	-	

1. Guaranteed by characterization results.

Table 95. Asynchronous multiplexed PSRAM/NOR write-NWAIT timings(1)

Symbol	Parameter	Min	Max	Unit
$t_{w(NE)}$	FMC_NE low time	$9T_{HCLK}$	$9T_{HCLK}+1.5$	ns
$t_{w(NWE)}$	FMC_NWE low time	$7T_{HCLK}-0.5$	$7T_{HCLK}+0.5$	
$t_{su(NWAIT_NE)}$	FMC_NWAIT valid before FMC_NEx high	$6T_{HCLK}+2$	-	
$t_{h(NE_NWAIT)}$	FMC_NEx hold time after FMC_NWAIT invalid	$4T_{HCLK}-1$	-	

1. Guaranteed by characterization results.

Synchronous waveforms and timings

Figure 62 through *Figure 65* represent synchronous waveforms and *Table 96* through *Table 99* provide the corresponding timings. The results shown in these tables are obtained with the following FMC configuration:

- BurstAccessMode = FMC_BurstAccessMode_Enable;
- MemoryType = FMC_MemoryType_CRAM;
- WriteBurst = FMC_WriteBurst_Enable;
- CLKDivision = 1;
- DataLatency = 1 for NOR Flash; DataLatency = 0 for PSRAM
- CL = 30 pF on data and address lines. CL = 10 pF on FMC_CLK unless otherwise specified.

In all timing tables, the T_{HCLK} is the HCLK clock period.

- For 2.7 V≤V_{DD}≤3.6 V, maximum FMC_CLK = 108 MHz at CL=20 pF or 90 MHz at CL=30 pF (on FMC_CLK).
- For 1.71 V≤V_{DD}<2.7 V, maximum FMC_CLK = 70 MHz at CL=10 pF (on FMC_CLK).

Figure 62. Synchronous multiplexed NOR/PSRAM read timings

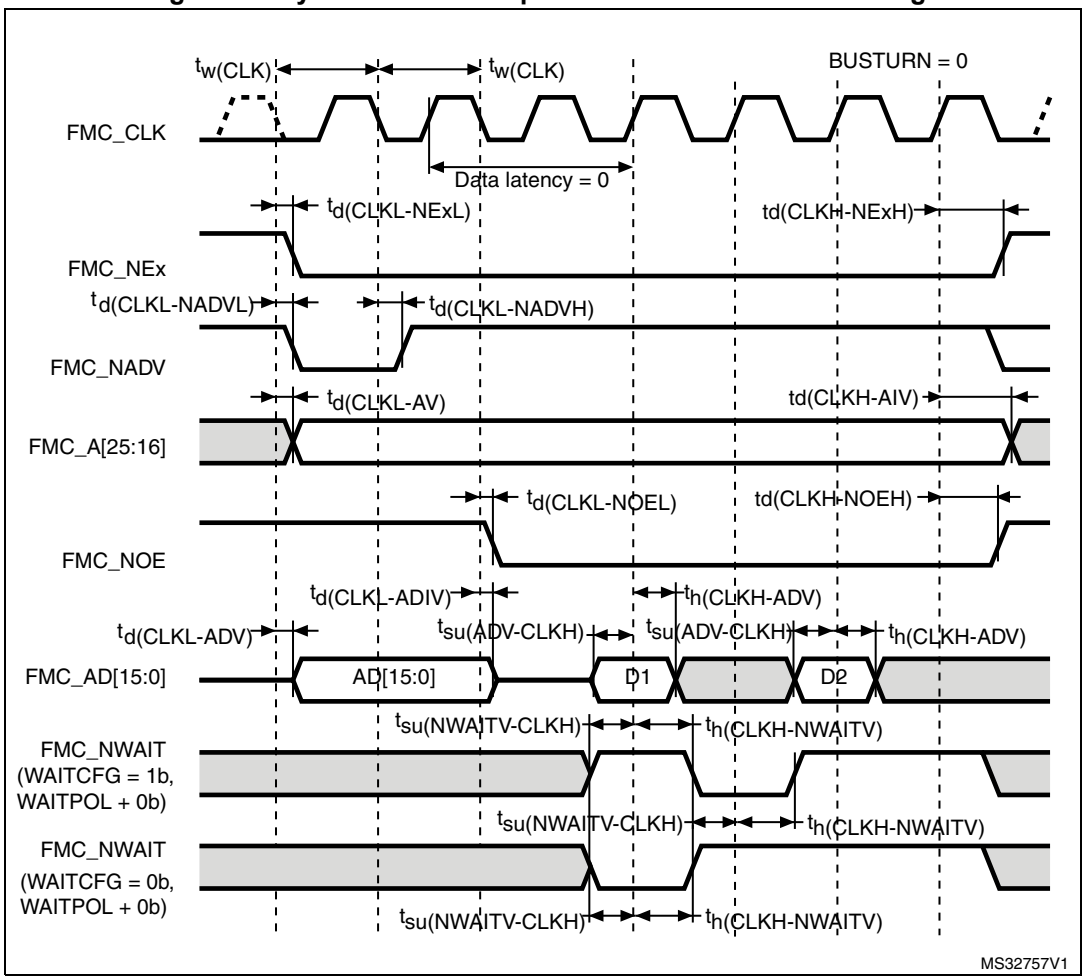

Table 96. Synchronous multiplexed NOR/PSRAM read timings(1)

Symbol	Parameter	Min	Max	Unit
$t_{w(CLK)}$	FMC_CLK period	$2T_{HCLK}-0.5$	-	ns
$t_{d(CLKL-NExL)}$	FMC_CLK low to FMC_NEx low (x=0..2)	-	2	
$t_{d(CLKH_NExH)}$	FMC_CLK high to FMC_NEx high (x= 0…2)	$T_{HCLK}+0.5$	-	
$t_{d(CLKL-NADVL)}$	FMC_CLK low to FMC_NADV low	-	1.5	
$t_{d(CLKL-NADVH)}$	FMC_CLK low to FMC_NADV high	0	-	
$t_{d(CLKL-AV)}$	FMC_CLK low to FMC_Ax valid (x=16…25)	-	2	
$t_{d(CLKH-AIV)}$	FMC_CLK high to FMC_Ax invalid (x=16…25)	T_{HCLK}	-	
$t_{d(CLKL-NOEL)}$	FMC_CLK low to FMC_NOE low	-	2	
$t_{d(CLKH-NOEH)}$	FMC_CLK high to FMC_NOE high	$T_{HCLK}-0.5$	-	
$t_{d(CLKL-ADV)}$	FMC_CLK low to FMC_AD[15:0] valid	-	3	
$t_{d(CLKL-ADIV)}$	FMC_CLK low to FMC_AD[15:0] invalid	0	-	
$t_{su(ADV-CLKH)}$	FMC_A/D[15:0] valid data before FMC_CLK high	1.5	-	
$t_{h(CLKH-ADV)}$	FMC_A/D[15:0] valid data after FMC_CLK high	1	-	
$t_{su(NWAIT-CLKH)}$	FMC_NWAIT valid before FMC_CLK high	2	-	
$t_{h(CLKH-NWAIT)}$	FMC_NWAIT valid after FMC_CLK high	3.5	-	

1. Guaranteed by characterization results.

Figure 63. Synchronous multiplexed PSRAM write timings

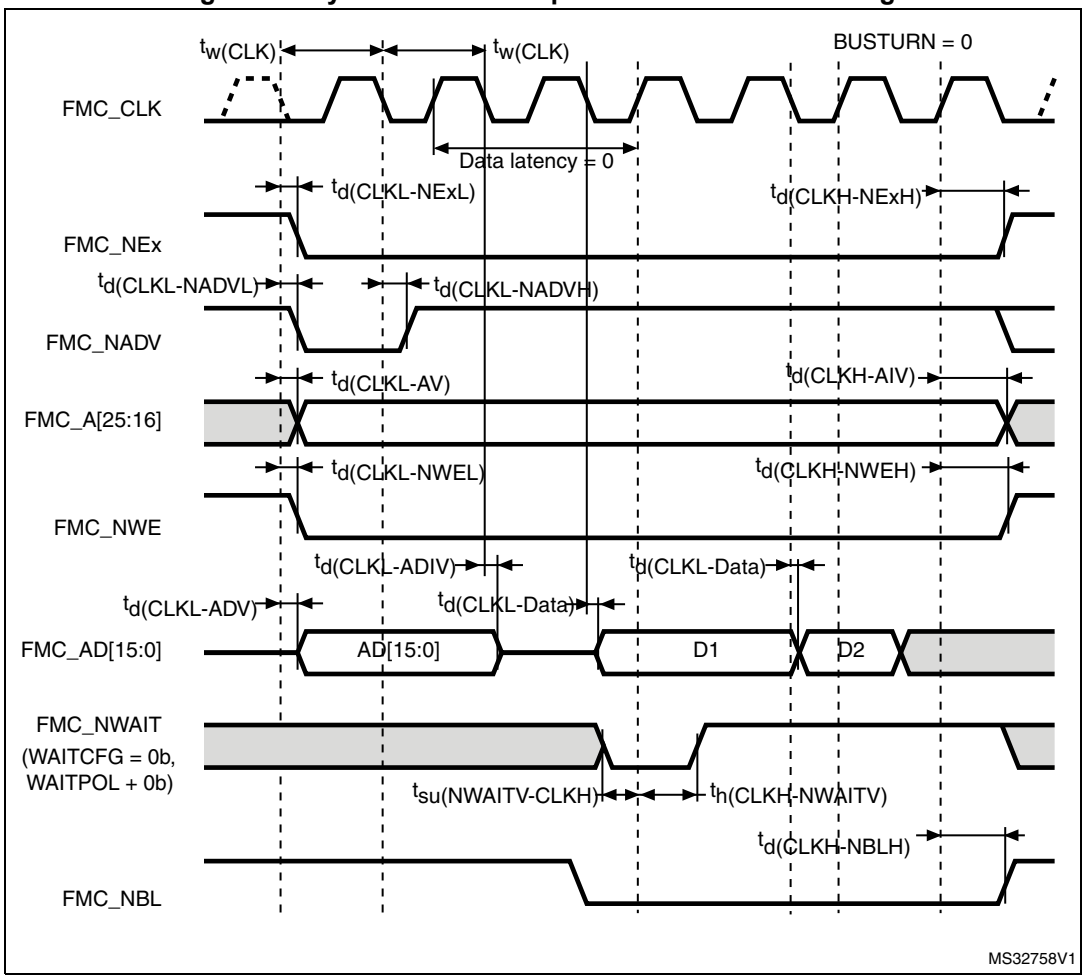

Table 97. Synchronous multiplexed PSRAM write timings[1]

Symbol	Parameter	Min	Max	Unit
$t_{w(CLK)}$	FMC_CLK period	$2T_{HCLK}-0.5$	-	ns
$t_{d(CLKL-NExL)}$	FMC_CLK low to FMC_NEx low (x=0..2)	-	1.5	
$t_{d(CLKH-NExH)}$	FMC_CLK high to FMC_NEx high (x= 0…2)	$T_{HCLK}+0.5$	-	
$t_{d(CLKL-NADVL)}$	FMC_CLK low to FMC_NADV low	-	1.5	
$t_{d(CLKL-NADVH)}$	FMC_CLK low to FMC_NADV high	0	-	
$t_{d(CLKL-AV)}$	FMC_CLK low to FMC_Ax valid (x=16…25)	-	2	
$t_{d(CLKH-AIV)}$	FMC_CLK high to FMC_Ax invalid (x=16…25)	T_{HCLK}	-	
$t_{d(CLKL-NWEL)}$	FMC_CLK low to FMC_NWE low	-	1.5	
$t_{(CLKH-NWEH)}$	FMC_CLK high to FMC_NWE high	$T_{HCLK}-0.5$	-	
$t_{d(CLKL-ADV)}$	FMC_CLK low to FMC_AD[15:0] valid	-	3	
$t_{d(CLKL-ADIV)}$	FMC_CLK low to FMC_AD[15:0] invalid	0	-	
$t_{d(CLKL-DATA)}$	FMC_A/D[15:0] valid data after FMC_CLK low	-	3.5	
$t_{d(CLKL-NBLL)}$	FMC_CLK low to FMC_NBL low	1	-	
$t_{d(CLKH-NBLH)}$	FMC_CLK high to FMC_NBL high	$T_{HCLK}+0.5$	-	
$t_{su(NWAIT-CLKH)}$	FMC_NWAIT valid before FMC_CLK high	2	-	
$t_{h(CLKH-NWAIT)}$	FMC_NWAIT valid after FMC_CLK high	3.5	-	

1. Guaranteed by characterization results.

Figure 64. Synchronous non-multiplexed NOR/PSRAM read timings

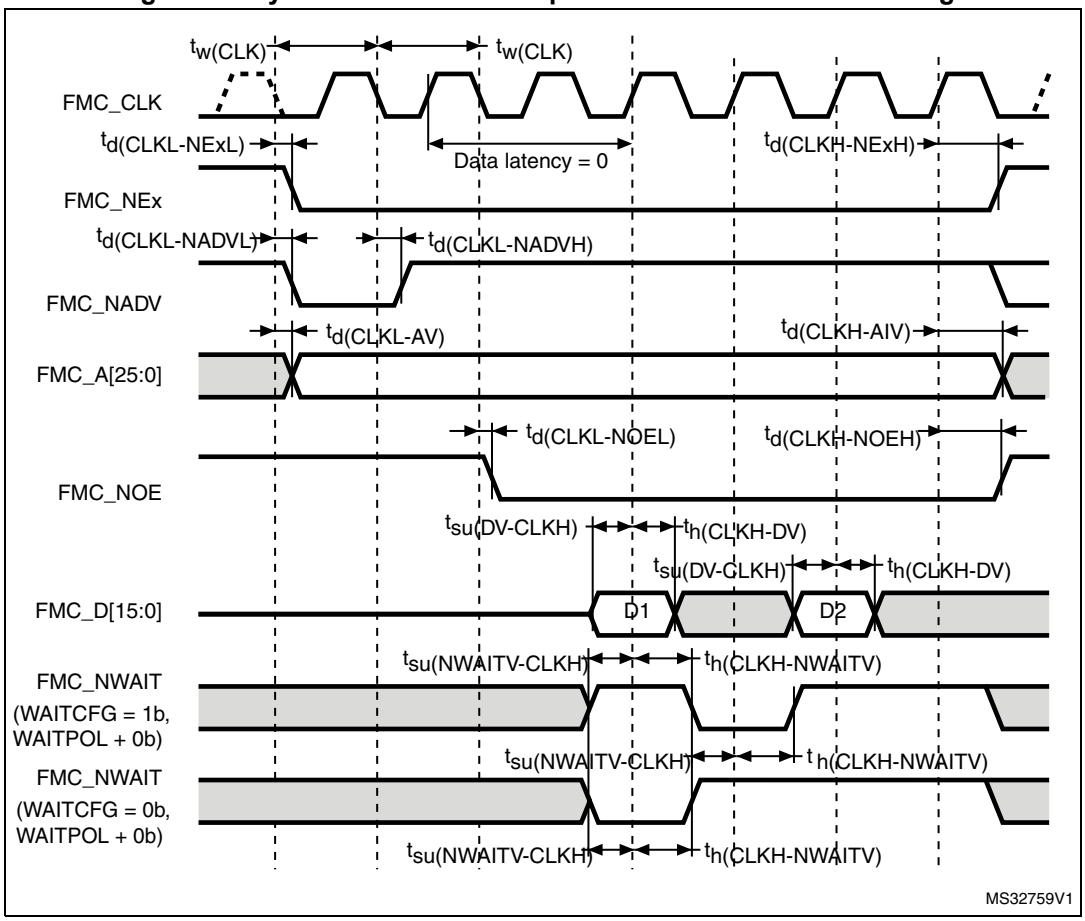

Table 98. Synchronous non-multiplexed NOR/PSRAM read timings(1)

Symbol	Parameter	Min	Max	Unit
$t_{w(CLK)}$	FMC_CLK period	$2T_{HCLK}-1$	-	ns
$t_{(CLKL-NExL)}$	FMC_CLK low to FMC_NEx low (x=0..2)	-	2.5	
$t_{d(CLKH-NExH)}$	FMC_CLK high to FMC_NEx high (x= 0…2)	$T_{HCLK}+0.5$	-	
$t_{d(CLKL-NADVL)}$	FMC_CLK low to FMC_NADV low	-	0	
$t_{d(CLKL-NADVH)}$	FMC_CLK low to FMC_NADV high	0	-	
$t_{d(CLKL-AV)}$	FMC_CLK low to FMC_Ax valid (x=16…25)	-	2.5	
$t_{d(CLKH-AIV)}$	FMC_CLK high to FMC_Ax invalid (x=16…25)	T_{HCLK}	-	
$t_{d(CLKL-NOEL)}$	FMC_CLK low to FMC_NOE low	-	2	
$t_{d(CLKH-NOEH)}$	FMC_CLK high to FMC_NOE high	$T_{HCLK}+0.5$	-	
$t_{su(DV-CLKH)}$	FMC_D[15:0] valid data before FMC_CLK high	1.5	-	
$t_{h(CLKH-DV)}$	FMC_D[15:0] valid data after FMC_CLK high	1	-	
$t_{(NWAIT-CLKH)}$	FMC_NWAIT valid before FMC_CLK high	2	-	
$t_{h(CLKH-NWAIT)}$	FMC_NWAIT valid after FMC_CLK high	3.5	-	

1. Guaranteed by characterization results.

Figure 65. Synchronous non-multiplexed PSRAM write timings

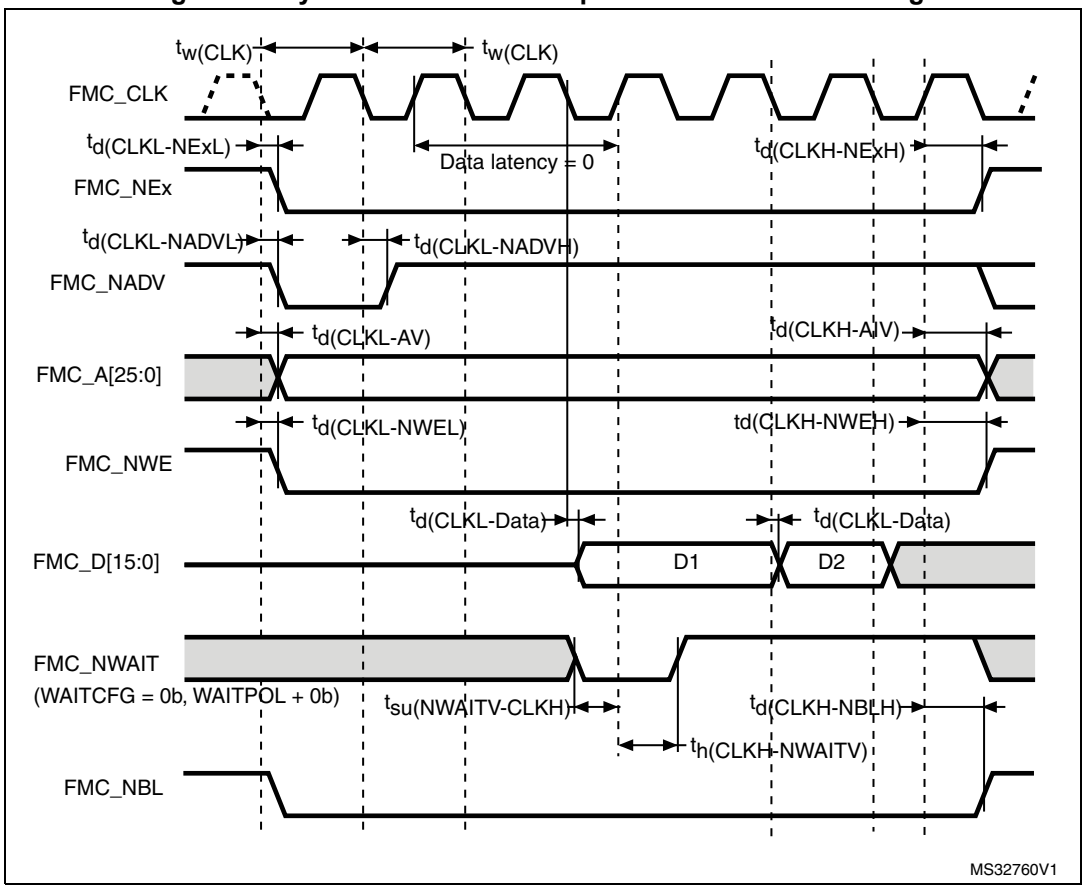

Table 99. Synchronous non-multiplexed PSRAM write timings(1)

Symbol	Parameter	Min	Max	Unit
$t_{(CLK)}$	FMC_CLK period	$2T_{HCLK}-1$	-	ns
$t_{d(CLKL-NExL)}$	FMC_CLK low to FMC_NEx low (x=0..2)	-	2.5	
$t_{(CLKH-NExH)}$	FMC_CLK high to FMC_NEx high (x= 0…2)	$T_{HCLK}+0.5$	-	
$t_{d(CLKL-NADVL)}$	FMC_CLK low to FMC_NADV low	-	1.5	
$t_{d(CLKL-NADVH)}$	FMC_CLK low to FMC_NADV high	0	-	
$t_{d(CLKL-AV)}$	FMC_CLK low to FMC_Ax valid (x=16…25)	-	2.5	
$t_{d(CLKH-AIV)}$	FMC_CLK high to FMC_Ax invalid (x=16…25)	0	-	
$t_{d(CLKL-NWEL)}$	FMC_CLK low to FMC_NWE low	-	1.5	
$t_{d(CLKH-NWEH)}$	FMC_CLK high to FMC_NWE high	$T_{HCLK}+1$	-	
$t_{d(CLKL-Data)}$	FMC_D[15:0] valid data after FMC_CLK low	-	3	
$t_{d(CLKL-NBLL)}$	FMC_CLK low to FMC_NBL low	1.5	-	
$t_{d(CLKH-NBLH)}$	FMC_CLK high to FMC_NBL high	$T_{HCLK}+0.5$	-	
$t_{su(NWAIT-CLKH)}$	FMC_NWAIT valid before FMC_CLK high	2	-	
$t_{h(CLKH-NWAIT)}$	FMC_NWAIT valid after FMC_CLK high	3.5	-	

1. Guaranteed by characterization results.

NAND controller waveforms and timings

Figure 66 through *Figure 69* represent synchronous waveforms, and *Table 100* and *Table 101* provide the corresponding timings. The results shown in this table are obtained with the following FMC configuration:

- COM.FMC_SetupTime = 0x01;
- COM.FMC_WaitSetupTime = 0x03;
- COM.FMC_HoldSetupTime = 0x02;
- COM.FMC_HiZSetupTime = 0x01;
- ATT.FMC_SetupTime = 0x01;
- ATT.FMC_WaitSetupTime = 0x03;
- ATT.FMC_HoldSetupTime = 0x02;
- ATT.FMC_HiZSetupTime = 0x01;
- Bank = FMC_Bank_NAND;
- MemoryDataWidth = FMC_MemoryDataWidth_16b;
- ECC = FMC_ECC_Enable;
- ECCPageSize = FMC_ECCPageSize_512Bytes;
- TCLRSetupTime = 0;
- TARSetupTime = 0.

In all timing tables, the T_{HCLK} is the HCLK clock period.

Figure 66. NAND controller waveforms for read access

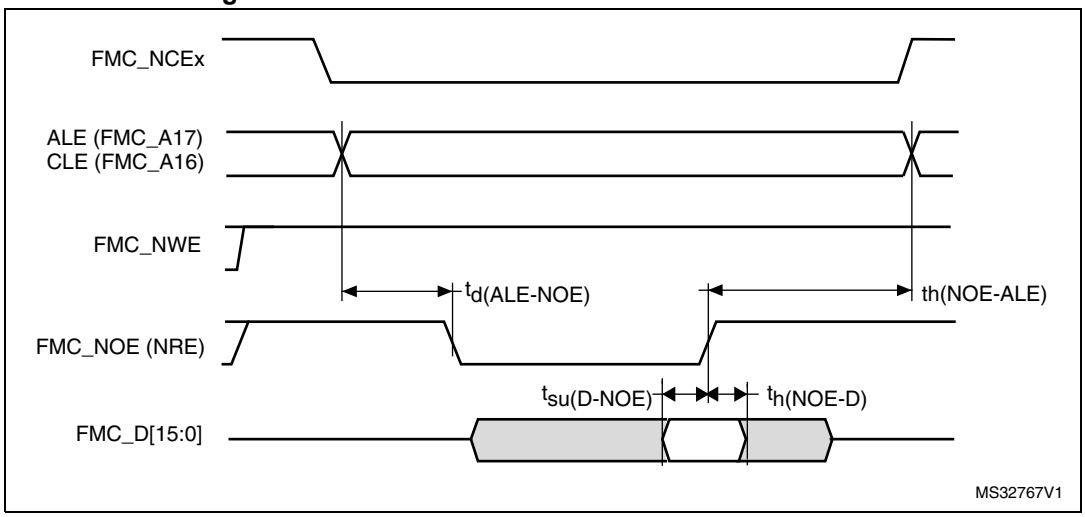

Figure 67. NAND controller waveforms for write access

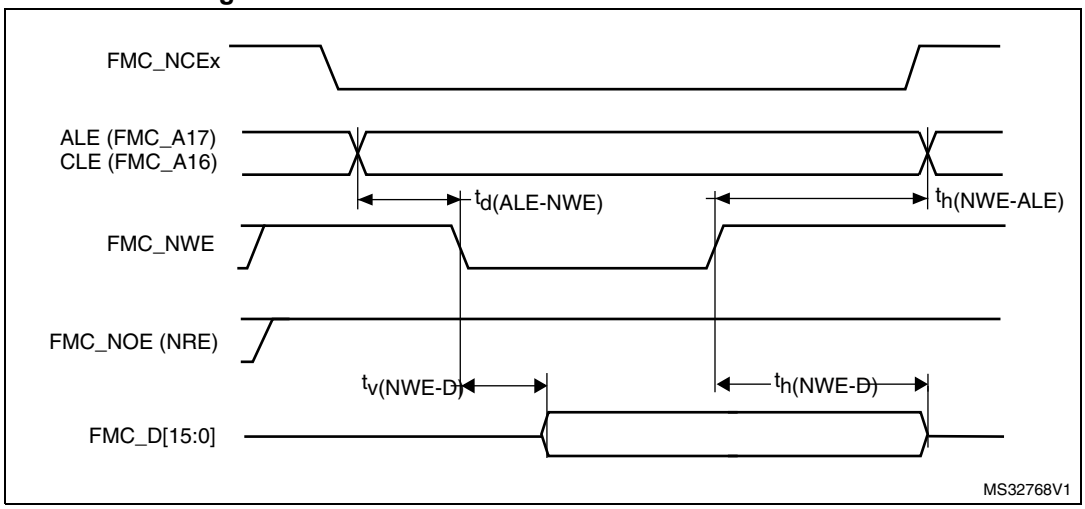

Figure 68. NAND controller waveforms for common memory read access

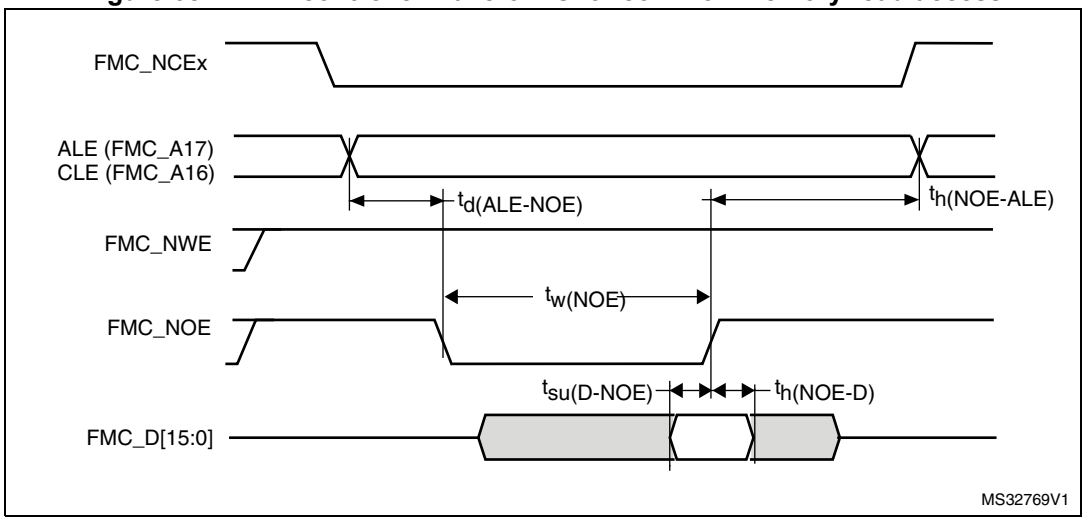

Figure 69. NAND controller waveforms for common memory write access

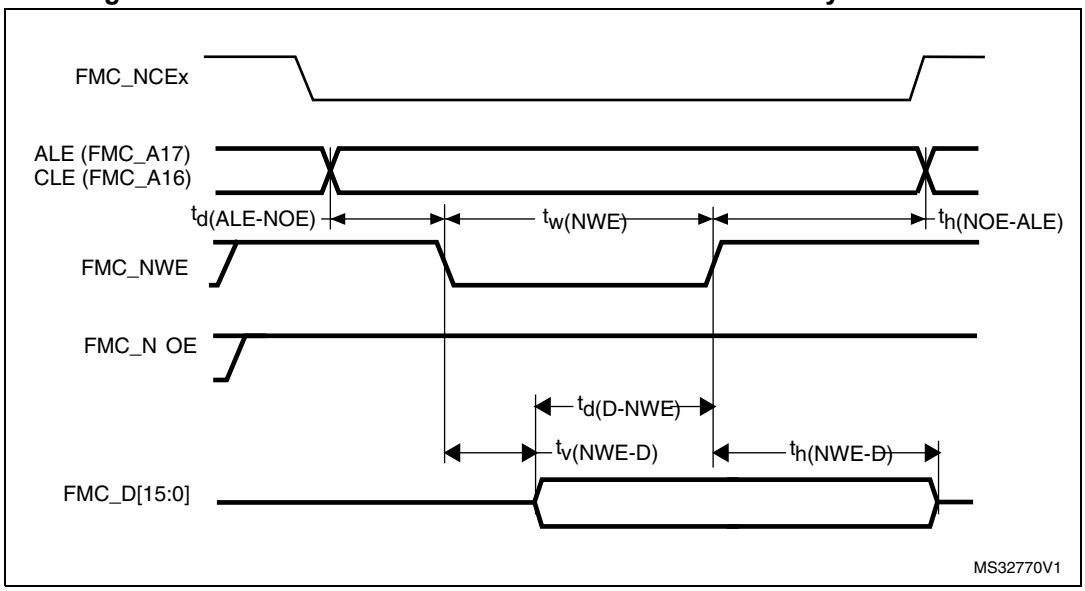

Table 100. Switching characteristics for NAND Flash read cycles(1)

Symbol	Parameter	Min	Max	Unit
$t_{w(N0E)}$	FMC_NOE low width	$4T_{HCLK}-0.5$	$4T_{HCLK}$	ns
$t_{su(D-NOE)}$	FMC_D[15-0] valid data before FMC_NOE high	13	-	
$t_{h(NOE-D)}$	FMC_D[15-0] valid data after FMC_NOE high	3	-	
$t_{d(ALE-NOE)}$	FMC_ALE valid before FMC_NOE low	-	$3T_{HCLK}-0.5$	
$t_{h(NOE-ALE)}$	FMC_NWE high to FMC_ALE invalid	$3T_{HCLK}-2$	-	

1. Guaranteed by characterization results.

Table 101. Switching characteristics for NAND Flash write cycles(1)

Symbol	Parameter	Min	Max	Unit
$t_{w(NWE)}$	FMC_NWE low width	$4T_{HCLK}-0.5$	$4T_{HCLK}$	ns
$t_{v(NWE-D)}$	FMC_NWE low to FMC_D[15-0] valid	0	-	
$t_{h(NWE-D)}$	FMC_NWE high to FMC_D[15-0] invalid	$3T_{HCLK}-1$	-	
$t_{d(D-NWE)}$	FMC_D[15-0] valid before FMC_NWE high	$5T_{HCLK}-3$	-	
$t_{d(ALE-NWE)}$	FMC_ALE valid before FMC_NWE low	-	$3T_{HCLK}-0.5$	
$t_{h(NWE-ALE)}$	FMC_NWE high to FMC_ALE invalid	$3T_{HCLK}-2$	-	

1. Guaranteed by characterization results.

SDRAM waveforms and timings

- CL = 30 pF on data and address lines. CL = 10 pF on FMC_SDCLK unless otherwise specified.

In all timing tables, the T_{HCLK} is the HCLK clock period.

- For 3.0 V≤V_{DD}≤3.6 V, maximum FMC_SDCLK= 100 MHz at CL=20 pF (on FMC_SDCLK).
- For 2.7 V≤V_{DD}≤3.6 V, maximum FMC_SDCLK = 90 MHz at CL=30 pF (on FMC_SDCLK).
- For 1.71 V≤V_{DD}<1.9 V, maximum FMC_SDCLK = 70 MHz at CL=10 pF (on FMC_SDCLK).

Figure 70. SDRAM read access waveforms (CL = 1)

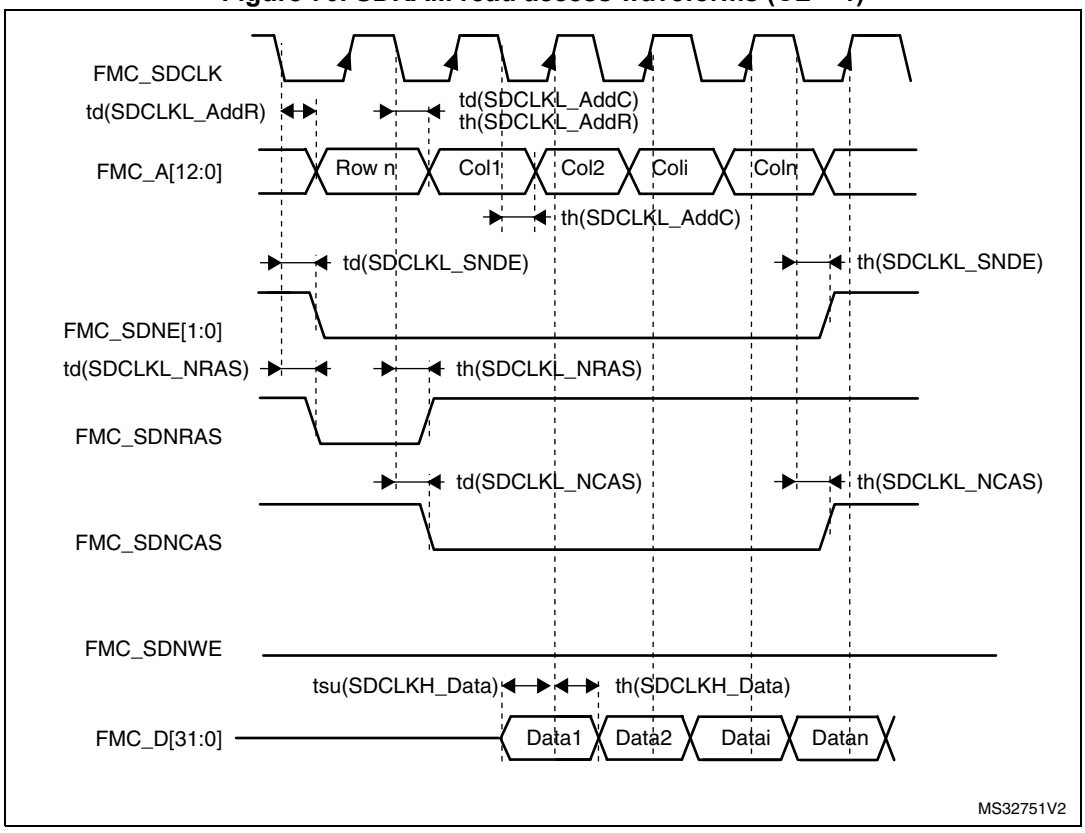

Table 102. SDRAM read timings(1)

Symbol	Parameter	Min	Max	Unit
$t_{w(SDCLK)}$	FMC_SDCLK period	$2T_{HCLK}-0.5$	$2T_{HCLK}+0.5$	ns
$t_{su(SDCLKH_Data)}$	Data input setup time	3.5	-	
$t_{h(SDCLKH_Data)}$	Data input hold time	1.5	-	
$t_{d(SDCLKL_Add)}$	Address valid time	-	4	
$t_{d(SDCLKL-SDNE)}$	Chip select valid time	-	0.5	
$t_{h(SDCLKL_SDNE)}$	Chip select hold time	0	-	
$t_{d(SDCLKL_SDNRAS)}$	SDNRAS valid time	-	0.5	
$t_{h(SDCLKL_SDNRAS)}$	SDNRAS hold time	0	-	
$t_{d(SDCLKL_SDNCAS)}$	SDNCAS valid time	-	0.5	
$t_{h(SDCLKL_SDNCAS)}$	SDNCAS hold time	0	-	

1. Guaranteed by characterization results.

Table 103. LPSDR SDRAM read timings(1)

Symbol	Parameter	Min	Max	Unit
$t_{W(SDCLK)}$	FMC_SDCLK period	$2T_{HCLK}-0.5$	$2T_{HCLK}+0.5$	ns
$t_{su(SDCLKH_Data)}$	Data input setup time	3	-	
$t_{h(SDCLKH_Data)}$	Data input hold time	1.5	-	
$t_{d(SDCLKL_Add)}$	Address valid time	-	3.5	
$t_{d(SDCLKL_SDNE)}$	Chip select valid time	-	0.5	
$t_{h(SDCLKL_SDNE)}$	Chip select hold time	0	-	
$t_{d(SDCLKL_SDNRAS}$	SDNRAS valid time	-	0.5	
$t_{h(SDCLKL_SDNRAS)}$	SDNRAS hold time	0	-	
$t_{d(SDCLKL_SDNCAS)}$	SDNCAS valid time	-	0.5	
$t_{h(SDCLKL_SDNCAS)}$	SDNCAS hold time	0	-	

1. Guaranteed by characterization results.

Figure 71. SDRAM write access waveforms

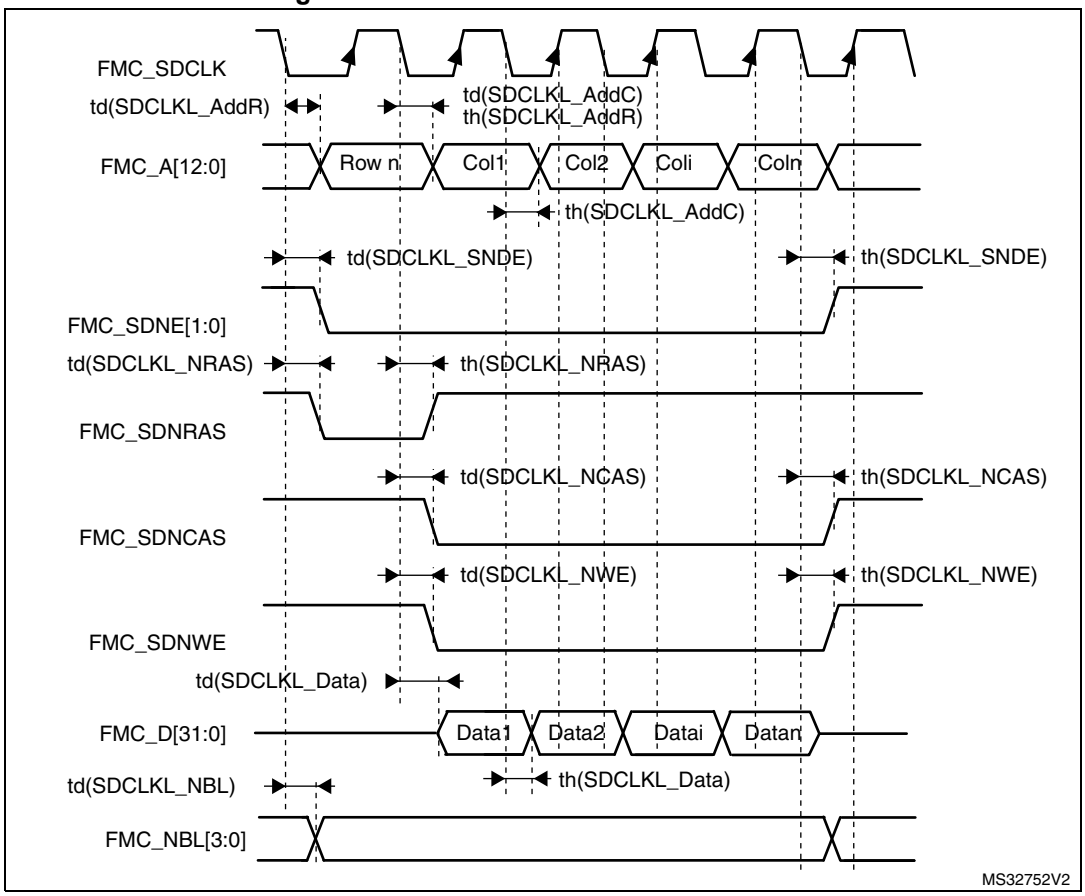

Table 104. SDRAM write timings(1)

Symbol	Parameter	Min	Max	Unit
$t_{w(SDCLK)}$	FMC_SDCLK period	$2T_{HCLK}-0.5$	$2T_{HCLK}+0.5$	ns
$t_{d(SDCLKL_Data)}$	Data output valid time	-	2	
$t_{h(SDCLKL_Data)}$	Data output hold time	0.5	-	
$t_{d(SDCLKL_Add)}$	Address valid time	-	4	
$t_{d(SDCLKL_SDNWE)}$	SDNWE valid time	-	0.5	
$t_{h(SDCLKL_SDNWE)}$	SDNWE hold time	0	-	
$t_{d(SDCLKL_SDNE)}$	Chip select valid time	-	0.5	
$t_{h(SDCLKL_SDNE)}$	Chip select hold time	0	-	
$t_{d(SDCLKL_SDNRAS)}$	SDNRAS valid time	-	0.5	
$t_{h(SDCLKL_SDNRAS)}$	SDNRAS hold time	0	-	
$t_{d(SDCLKL_SDNCAS)}$	SDNCAS valid time	-	0.5	
$t_{d(SDCLKL_SDNCAS)}$	SDNCAS hold time	0	-	

1. Guaranteed by characterization results.

Table 105. LPSDR SDRAM write timings(1)

Symbol	Parameter	Min	Max	Unit
$t_{w(SDCLK)}$	FMC_SDCLK period	$2T_{HCLK}-0.5$	$2T_{HCLK}+0.5$	ns
$t_{d(SDCLKL_Data)}$	Data output valid time	-	4	
$t_{h(SDCLKL_Data)}$	Data output hold time	0	-	
$t_{d(SDCLKL_Add)}$	Address valid time	-	3.5	
$t_{d(SDCLKL-SDNWE)}$	SDNWE valid time	-	0.5	
$t_{h(SDCLKL-SDNWE)}$	SDNWE hold time	0	-	
$t_{d(SDCLKL-SDNE)}$	Chip select valid time	-	0.5	
$t_{h(SDCLKL-SDNE)}$	Chip select hold time	0	-	
$t_{d(SDCLKL-SDNRAS)}$	SDNRAS valid time	-	0.5	
$t_{h(SDCLKL-SDNRAS)}$	SDNRAS hold time	0	-	
$t_{d(SDCLKL-SDNCAS)}$	SDNCAS valid time	-	0.5	
$t_{d(SDCLKL-SDNCAS)}$	SDNCAS hold time	0	-	

1. Guaranteed by characterization results.

5.3.28 Quad-SPI interface characteristics

Unless otherwise specified, the parameters given in *Table 106* and *Table 107* for Quad-SPI are derived from tests performed under the ambient temperature, f_{AHB} frequency and V_{DD} supply voltage conditions summarized in *Table 17: General operating conditions*, with the following configuration:

- Output speed is set to OSPEEDRy[1:0] = 11
- Capacitive load C = 20 pF
- Measurement points are done at CMOS levels: $0.5 \times V_{DD}$

Refer to *Section 5.3.17: I/O port characteristics* for more details on the input/output alternate function characteristics.

Table 106. Quad-SPI characteristics in SDR mode(1)

Symbol	Parameter	Conditions	Min	Typ	Max	Unit
Fck1/t(CK)	Quad-SPI clock frequency	$2.7\ V \le V_{DD} < 3.6\ V$ CL=20 pF	-	-	108	MHz
		$1.71\ V < V_{DD} < 3.6\ V$ CL=15 pF	-	-	100	

Table 106. Quad-SPI characteristics (continued)in SDR mode(1) (continued)

Symbol	Parameter	Conditions	Min	Typ	Max	Unit
tw(CKH)	Quad-SPI clock high and low time	-	t(CK)/2 -1	-	t(CK)/2	ns
tw(CKL)			t(CK)/2	-	t(CK)/2+1	
ts(IN)	Data input setup time	-	1	-	-	
th(IN)	Data input hold time		3	-	-	
tv(OUT)	Data output valid time	2.7 V<V_{DD}<3.6 V	-	1.5	3	
		1.71 V<V_{DD}<3.6 V	-	1.5	4	
th(OUT)	Data output hold time	-	0	-	-	

1. Guaranteed by characterization results.

Table 107. Quad-SPI characteristics in DDR mode(1)

Symbol	Parameter	Conditions	Min	Typ	Max	Unit
Fck1/t(CK)	Quad-SPI clock frequency	2.7 V<V_{DD}<3.6 V CL=20 pF	-	-	80	MHz
		1.8 V<V_{DD}<3.6 V CL=15 pF	-	-	80	
		1.71 V<V_{DD}<3.6 V CL=10 pF	-	-	80	
tw(CKH)	Quad-SPI clock high and low time	-	t(CK)/2 -1	-	t(CK)/2	ns
tw(CKL)			t(CK)/2	-	t(CK)/2+ 1	
ts(IN), tsf(IN)	Data input setup time	2.7 V<V_{DD}<3.6 V	1.5	-	-	
		1.71 V<V_{DD}<2 V	0.75	-	-	
thr(IN), thf(IN)	Data input hold time	2.7 V<V_{DD}<3.6 V	3.5	-	-	
		1.71 V<V_{DD}<2 V	4.5			
tvr(OUT), tvf(OUT)	Data output valid time	2.7 V<V_{DD}<3.6 V	-	8	10.5	
		1.71 V<V_{DD}<3.6 V DHHC=0	-	8	14.5	
		DHHC=1 Pres=1, 2...	-	Thclk/2 +1.75	Thclk/2 +2.25	
thr(OUT), thf(OUT)	Data output hold time	DHHC=0	7.5	-	-	
		DHHC=1 Pres=1, 2...	Thclk/2 +1.5	-	-	

1. Guaranteed by characterization results.

Figure 72. Quad-SPI timing diagram - SDR mode

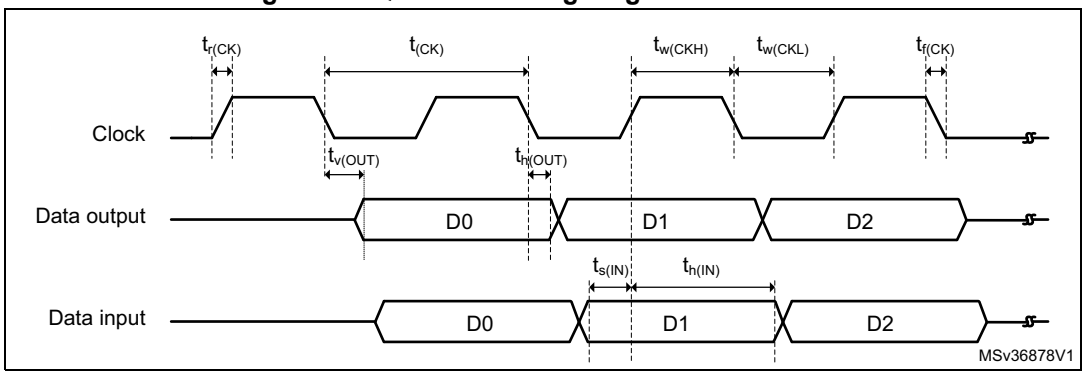

Figure 73. Quad-SPI timing diagram - DDR mode

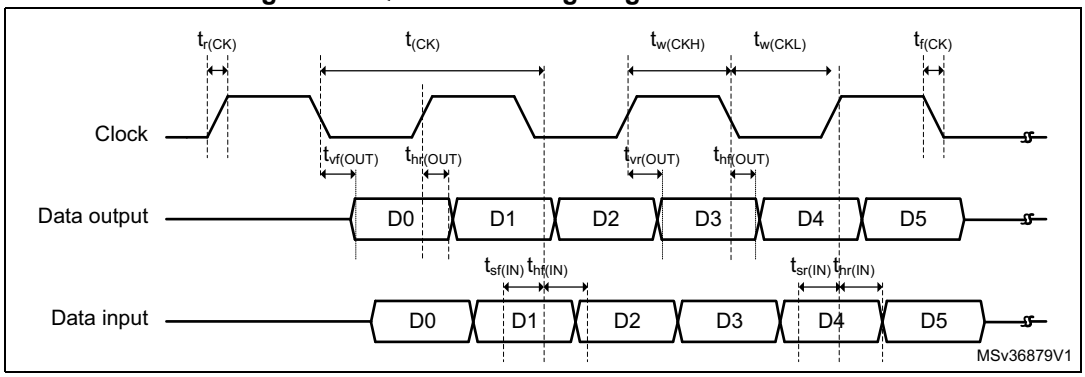

5.3.29 Camera interface (DCMI) timing specifications

Unless otherwise specified, the parameters given in *Table 108* for DCMI are derived from tests performed under the ambient temperature, f_{HCLK} frequency and V_{DD} supply voltage summarized in *Table 17*, with the following configuration:

- DCMI_PIXCLK polarity: falling
- DCMI_VSYNC and DCMI_HSYNC polarity: high
- Data formats: 14 bits

Table 108. DCMI characteristics(1)

Symbol	Parameter	Min	Max	Unit
-	Frequency ratio DCMI_PIXCLK/f_{HCLK}	-	0.4	
DCMI_PIXCLK	Pixel clock input	-	54	MHz
D_{Pixel}	Pixel clock input duty cycle	30	70	%
$t_{su(DATA)}$	Data input setup time	3.5	-	ns
$t_{h(DATA)}$	Data input hold time	0	-	
$t_{su(HSYNC)}$ $t_{su(VSYNC)}$	DCMI_HSYNC/DCMI_VSYNC input setup time	2.5	-	
$t_{h(HSYNC)}$ $t_{h(VSYNC)}$	DCMI_HSYNC/DCMI_VSYNC input hold time	0	-	

1. Guaranteed by characterization results.

Figure 74. DCMI timing diagram

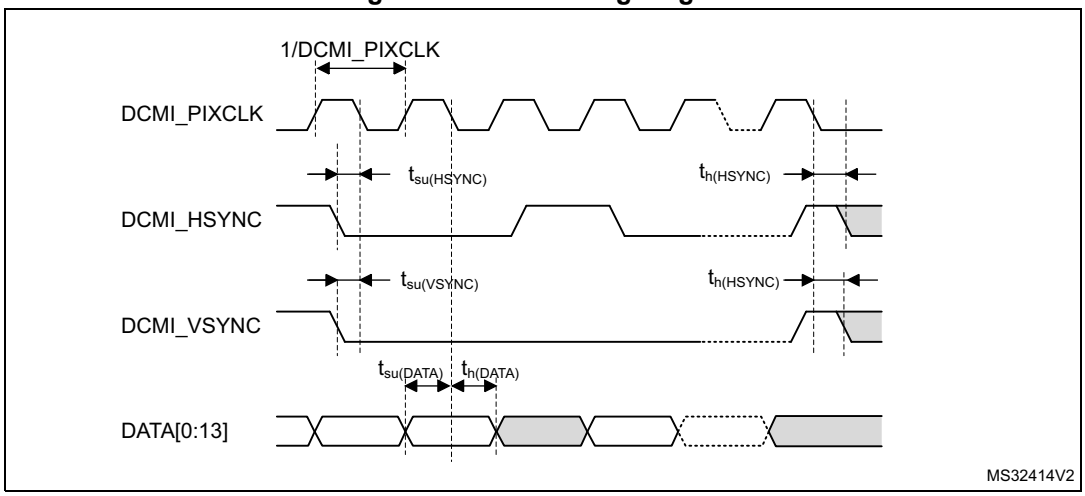

5.3.30 LCD-TFT controller (LTDC) characteristics

Unless otherwise specified, the parameters given in *Table 109* for LCD-TFT are derived from tests performed under the ambient temperature, f_{HCLK} frequency and V_{DD} supply voltage summarized in *Table 17*, with the following configuration:

- LCD_CLK polarity: high
- LCD_DE polarity : low
- LCD_VSYNC and LCD_HSYNC polarity: high
- Pixel formats: 24 bits

Table 109. LTDC characteristics (1)

Symbol	Parameter	Min	Max	Unit
f_{CLK}	LTDC clock output frequency	-	45	MHz
D_{CLK}	LTDC clock output duty cycle	45	55	%
$t_{w(CLKH)}$ $t_{w(CLKL)}$	Clock High time, low time	tw(CLK)/2 − 0.5	tw(CLK)/2+0.5	ns
$t_{v(DATA)}$	Data output valid time	-	6	
$t_{h(DATA)}$	Data output hold time	2	-	
$t_{v(HSYNC)}$	HSYNC/VSYNC/DE output valid time	-	3	
$t_{v(VSYNC)}$				
$t_{v(DE)}$				
$t_{h(HSYNC)}$	HSYNC/VSYNC/DE output hold time	0.5	-	
$t_{h(VSYNC)}$				
th(DE)				

1. Guaranteed by characterization results.

Figure 75. LCD-TFT horizontal timing diagram

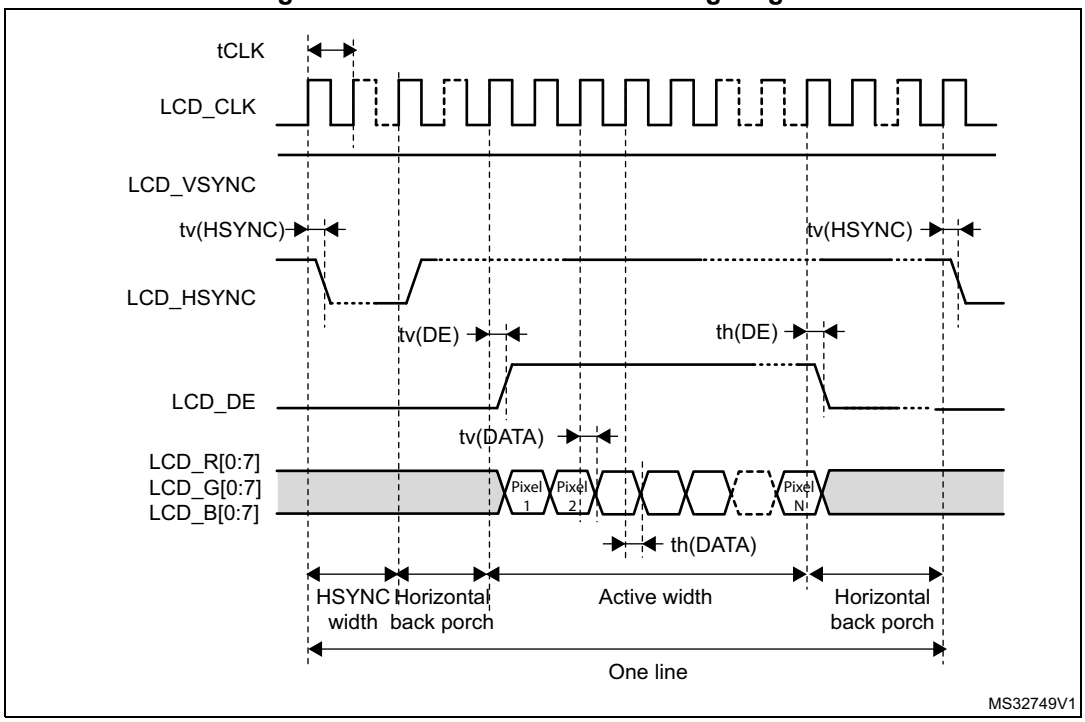

Figure 76. LCD-TFT vertical timing diagram

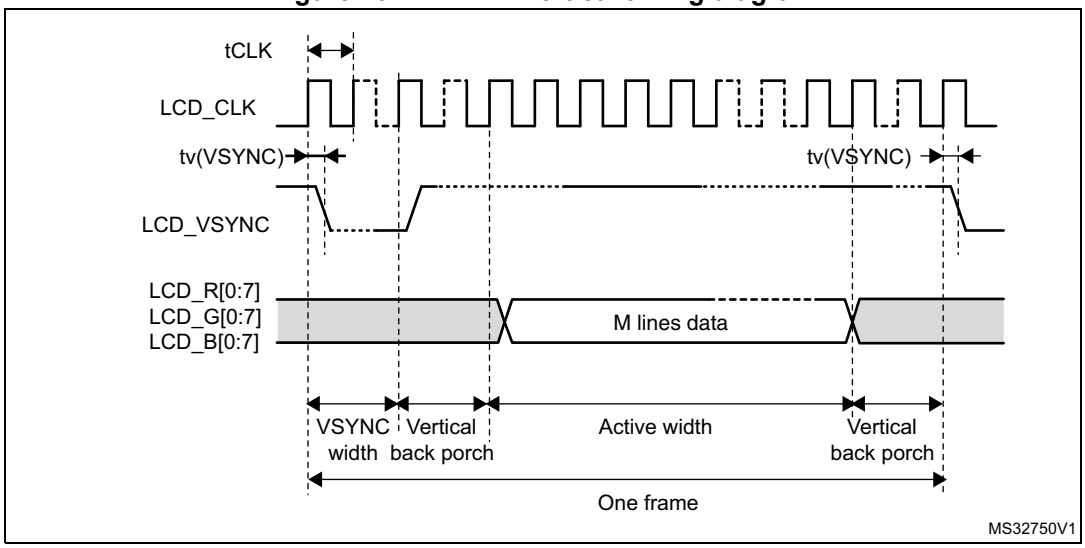

5.3.31 SD/SDIO MMC card host interface (SDMMC) characteristics

Unless otherwise specified, the parameters given in *Table 110* for the SDIO/MMC interface are derived from tests performed under the ambient temperature, f_{PCLK2} frequency and V_{DD} supply voltage conditions summarized in *Table 17*, with the following configuration:

- Output speed is set to OSPEEDRy[1:0] = 11
- Capacitive load C = 30 pF
- Measurement points are done at CMOS levels: $0.5V_{DD}$

Refer to *Section 5.3.17: I/O port characteristics* for more details on the input/output characteristics.

Figure 77. SDIO high-speed mode

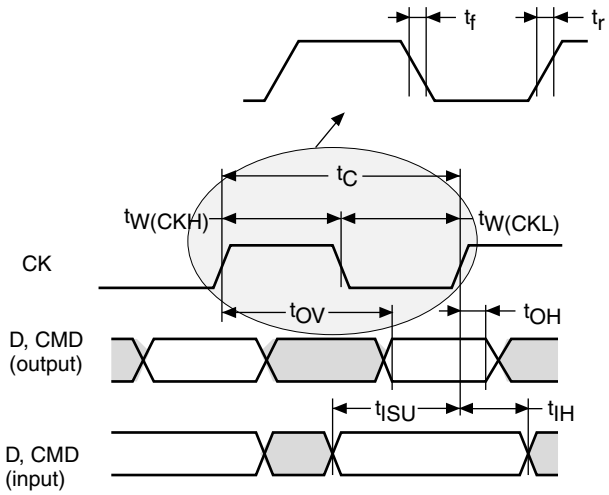

Figure 78. SD default mode

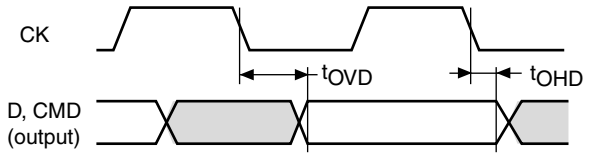

Table 110. Dynamic characteristics: SD / MMC characteristics, V_{DD}=2.7V to 3.6V(1)

Symbol	Parameter	Conditions	Min	Typ	Max	Unit
f_{PP}	Clock frequency in data transfer mode	-	0	-	50	MHz
-	SDMMC_CK/fPCLK2 frequency ratio	-	-	-	8/3	-
$t_{W(CKL)}$	Clock low time	fpp =50 MHz	9.5	10.5	-	ns
$t_{W(CKH)}$	Clock high time	fpp =50 MHz	8.5	9.5	-	
CMD, D inputs (referenced to CK) in MMC and SD HS mode						
t_{ISU}	Input setup time HS	fpp =50 MHz	2.5	-	-	ns
t_{IH}	Input hold time HS	fpp =50 MHz	3	-	-	
CMD, D outputs (referenced to CK) in MMC and SD HS mode						
t_{OV}	Output valid time HS	fpp =50 MHz	-	11.5	12	ns
t_{OH}	Output hold time HS	fpp =50 MHz	10.5	-	-	
CMD, D inputs (referenced to CK) in SD default mode						
tISUD	Input setup time SD	fpp =25 MHz	2	-	-	ns
tIHD	Input hold time SD	fpp =25 MHz	4	-	-	
CMD, D outputs (referenced to CK) in SD default mode						
tOVD	Output valid default time SD	fpp =25 MHz	-	1.5	2	ns
tOHD	Output hold default time SD	fpp =25 MHz	0.5	-	-	

1. Guaranteed by characterization results,.

Table 111. Dynamic characteristics: eMMC characteristics, V_{DD}=1.71V to 1.9V(1)(2)

Symbol	Parameter	Conditions	Min	Typ	Max	Unit
f_{PP}	Clock frequency in data transfer mode	-	0	-	50	MHz
-	SDMMC_CK/fPCLK2 frequency ratio	-	-	-	8/3	-
$t_{W(CKL)}$	Clock low time	fpp =50 MHz	9.5	10.5	-	ns
$t_{W(CKH)}$	Clock high time	fpp =50 MHz	8.5	9.5	-	
CMD, D inputs (referenced to CK) in eMMC mode						
t_{ISU}	Input setup time HS	fpp =50 MHz	0.5	-	-	ns
t_{IH}	Input hold time HS	fpp =50 MHz	3.5	-	-	
CMD, D outputs (referenced to CK) in eMMC mode						
t_{OV}	Output valid time HS	fpp =50 MHz	-	12	12.5	ns
t_{OH}	Output hold time HS	fpp =50 MHz	11	-	-	

1. Guaranteed by characterization results.
2. Cload = 20 pF.

6 Package information

In order to meet environmental requirements, ST offers these devices in different grades of ECOPACK® packages, depending on their level of environmental compliance. ECOPACK® specifications, grade definitions and product status are available at: *www.st.com*. ECOPACK® is an ST trademark.

6.1 LQFP100, 14 x 14 mm low-profile quad flat package information

Figure 79. LQFP100, 14 x 14 mm 100-pin low-profile quad flat package outline

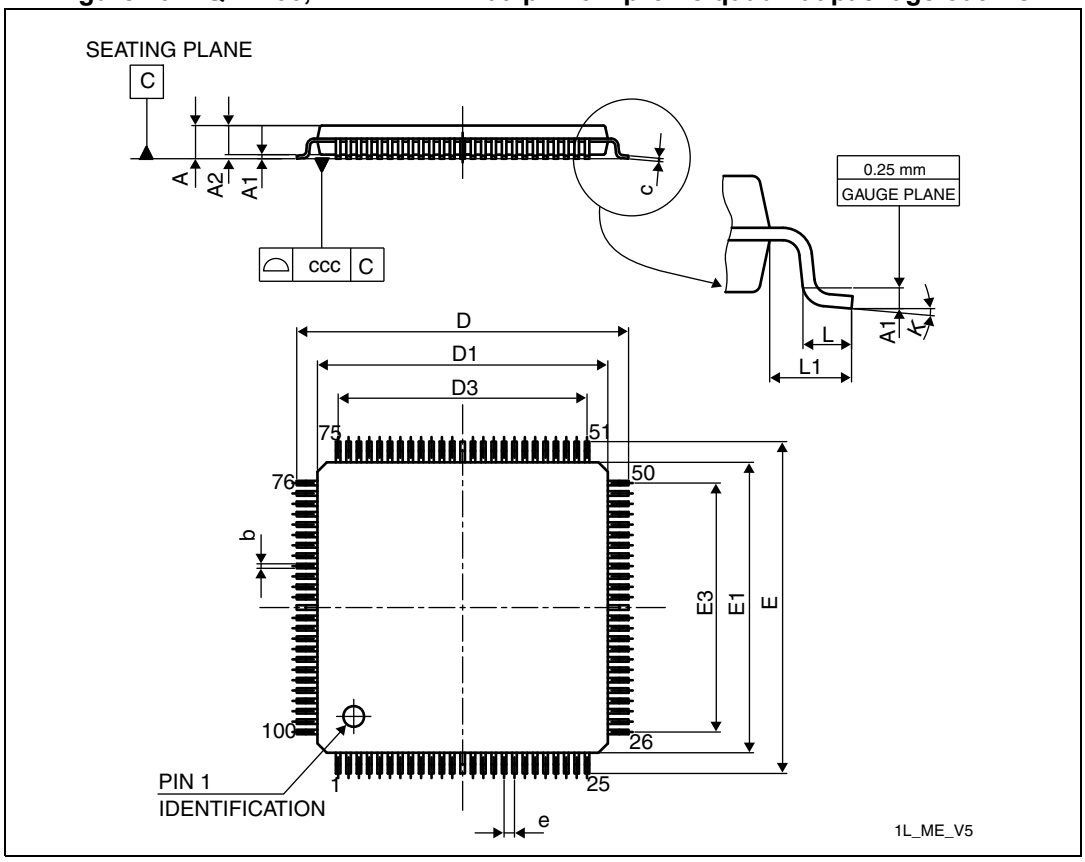

1. Drawing is not to scale.

Table 112. LQPF100, 14 x 14 mm 100-pin low-profile quad flat package mechanical data

Symbol	millimeters			inches[1]		
	Min	Typ	Max	Min	Typ	Max
A	-	-	1.600	-	-	0.0630
A1	0.050	-	0.150	0.0020	-	0.0059
A2	1.350	1.400	1.450	0.0531	0.0551	0.0571
b	0.170	0.220	0.270	0.0067	0.0087	0.0106
c	0.090	-	0.200	0.0035	-	0.0079
D	15.800	16.000	16.200	0.6220	0.6299	0.6378
D1	13.800	14.000	14.200	0.5433	0.5512	0.5591
D3	-	12.000	-	-	0.4724	-
E	15.800	16.000	16.200	0.6220	0.6299	0.6378
E1	13.800	14.000	14.200	0.5433	0.5512	0.5591
E3	-	12.000	-	-	0.4724	-
e	-	0.500	-	-	0.0197	-
L	0.450	0.600	0.750	0.0177	0.0236	0.0295
L1	-	1.000	-	-	0.0394	-
k	0°	3.5°	7°	0°	3.5°	7°
ccc	-	-	0.080	-	-	0.0031

1. Values in inches are converted from mm and rounded to 4 decimal digits.

Figure 80. LQFP100, 14 x 14 mm, 100-pin low-profile quad flat package recommended footprint

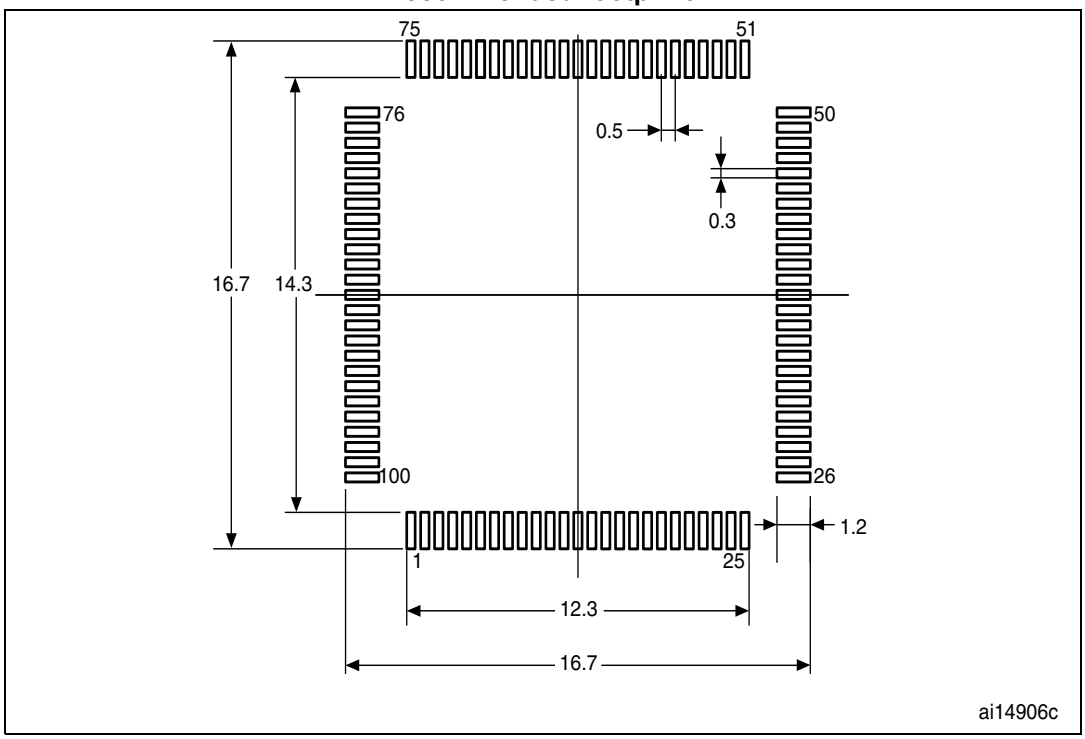

1. Dimensions are expressed in millimeters.

Marking of engineering samples

The following figure gives an example of topside marking orientation versus pin 1 identifier location.

Figure 81. LQFP100, 14 x 14 mm, 100-pin low-profile quad flat package top view example

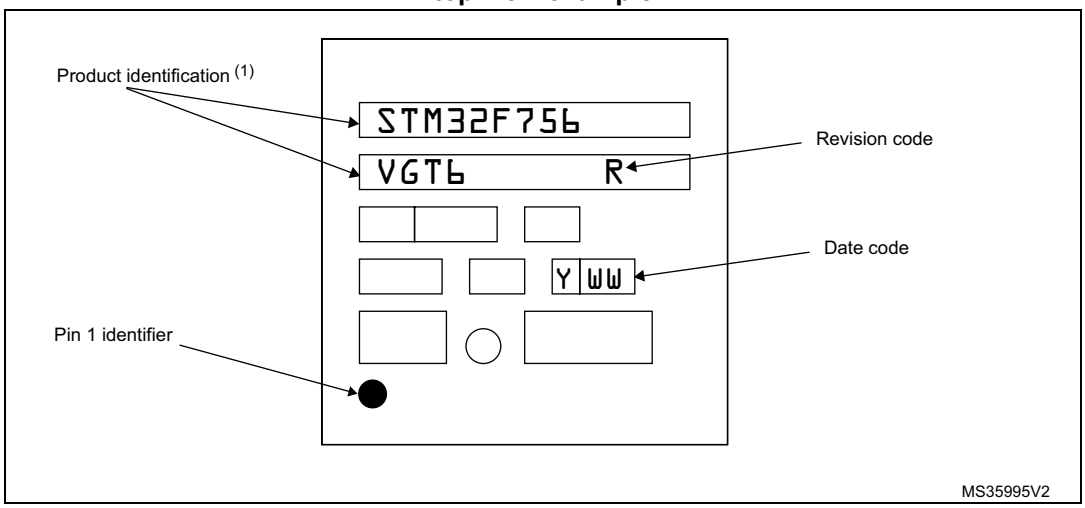

1. Parts marked as “ES”, “E” or accompanied by an Engineering Sample notification letter, are not yet qualified and therefore not yet ready to be used in production and any consequences deriving from such usage will not be at ST charge. In no event, ST will be liable for any customer usage of these engineering samples in production. ST Quality has to be contacted prior to any decision to use these Engineering samples to run qualification activity.

6.2 TFBGA100, 8 x 8 x 0.8 mm thin fine-pitch ball grid array package information

Figure 82. TFBGA100, 8 × 8 × 0.8 mm thin fine-pitch ball grid array package outline

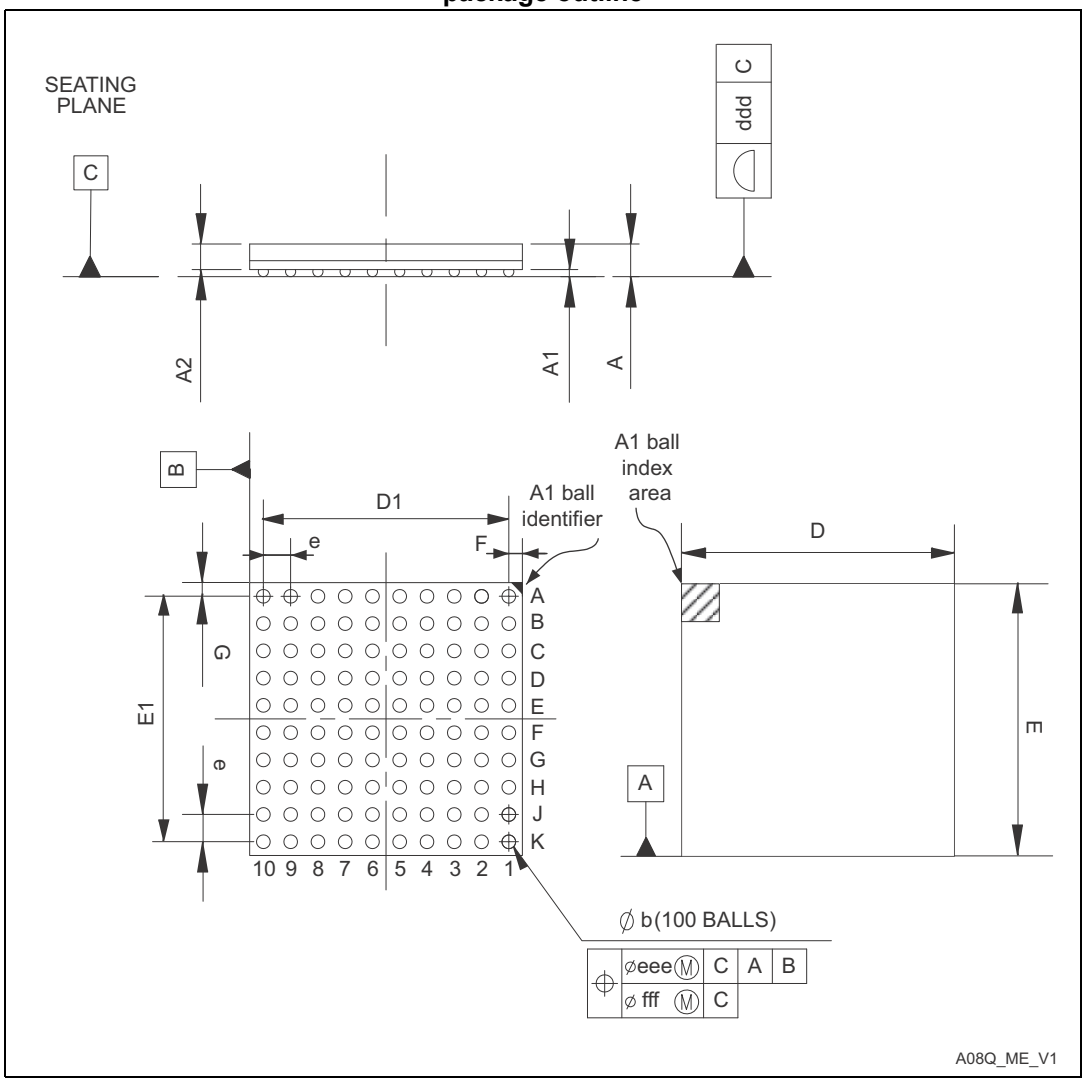

1. Drawing is not to scale.

Table 113. TFBGA100, 8 x 8 × 0.8 mm thin fine-pitch ball grid array package mechanical data

Symbol	millimeters			inches(1)		
	Min	Typ	Max	Min	Typ	Max
A	-	-	1.100	-	-	0.0433
A1	0.150	-	-	0.0059	-	-
A2	-	0.760	-	-	0.0299	-
b	0.350	0.400	0.450	0.0138	0.0157	0.0177

Table 113. TFBGA100, 8 x 8 × 0.8 mm thin fine-pitch ball grid array package mechanical data (continued)

Symbol	millimeters			inches[1]		
	Min	Typ	Max	Min	Typ	Max
D	7.850	8.000	8.150	0.3091	0.3150	0.3209
D1	-	7.200		-	0.2835	-
E	7.850	8.000	8.150	0.3091	0.3150	0.3209
E1	-	7.200	-	-	0.2835	-
e	-	0.800	-	-	0.0315	-
F	-	0.400	-	-	0.0157	-
G	-	0.400	-	-	0.0157	-
ddd	-	-	0.100	-	-	0.0039
eee	-	-	0.150	-	-	0.0059
fff	-	-	0.080	-	-	0.0031

1. Values in inches are converted from mm and rounded to 4 decimal digits.

Figure 83. TFBGA100, 8 x 8 x 0.8 mm thin fine-pitch ball grid array package recommended footprint

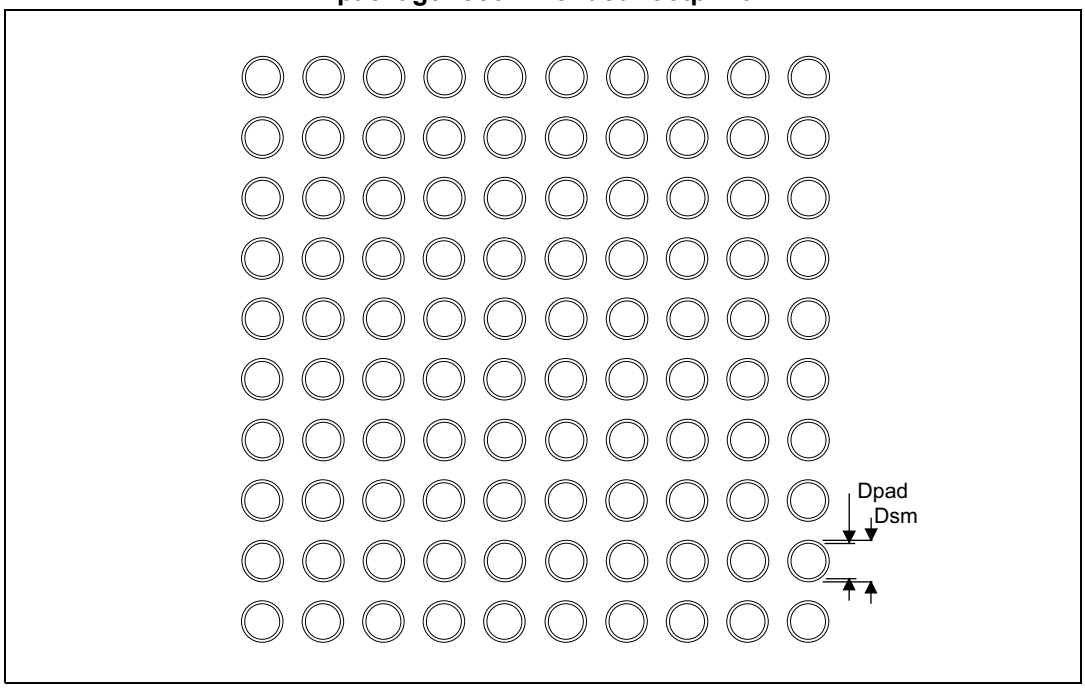

1. Dimensions are expressed in millimeters.

Table 114. TFBGA100 recommended PCB design rules (0.8 mm pitch BGA)

Dimension	Recommended values
Pitch	0.8
Dpad	0.400 mm
Dsm	0.470 mm typ (depends on the soldermask registration tolerance)
Stencil opening	0.400 mm
Stencil thickness	Between 0.100 mm and 0.125 mm
Pad trace width	0.120 mm

Marking of engineering samples

The following figure gives an example of topside marking orientation versus ball A1 identifier location.

Figure 84. TFBGA100, 8 × 8 × 0.8mm thin fine-pitch ball grid array package top view example

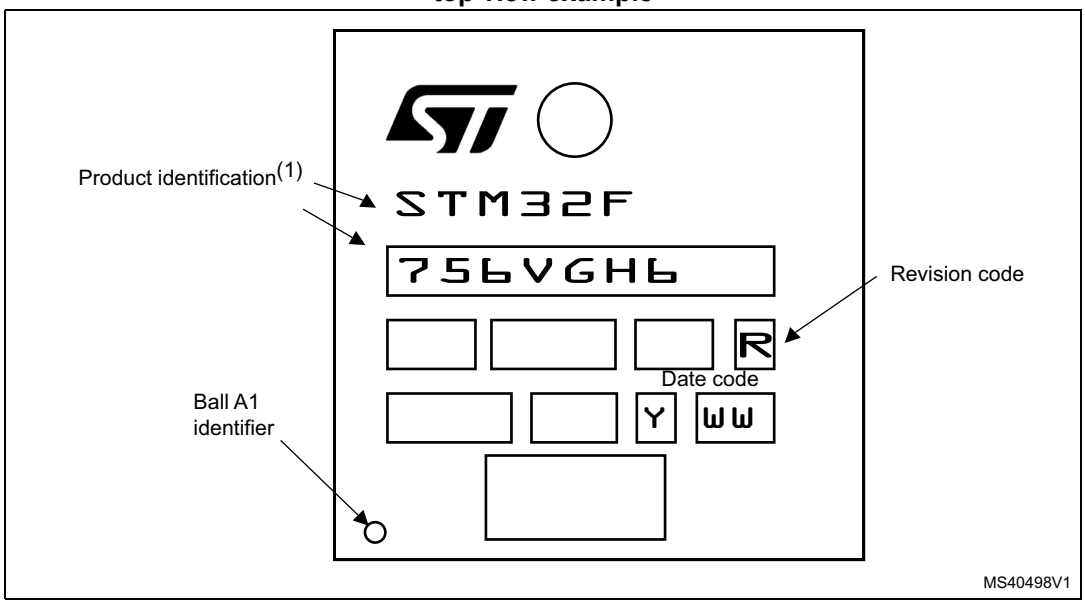

1. Parts marked as “ES”, “E” or accompanied by an Engineering Sample notification letter, are not yet qualified and therefore not yet ready to be used in production and any consequences deriving from such usage will not be at ST charge. In no event, ST will be liable for any customer usage of these engineering samples in production. ST Quality has to be contacted prior to any decision to use these Engineering samples to run qualification activity.

6.3 WLCSP143, 4.539x 5.849 mm, 0.4 mm pitch wafer level chip scale package information

Figure 85. WLCSP143, 4.539x 5.849 mm, 0.4 mm pitch wafer level chip scale package outline

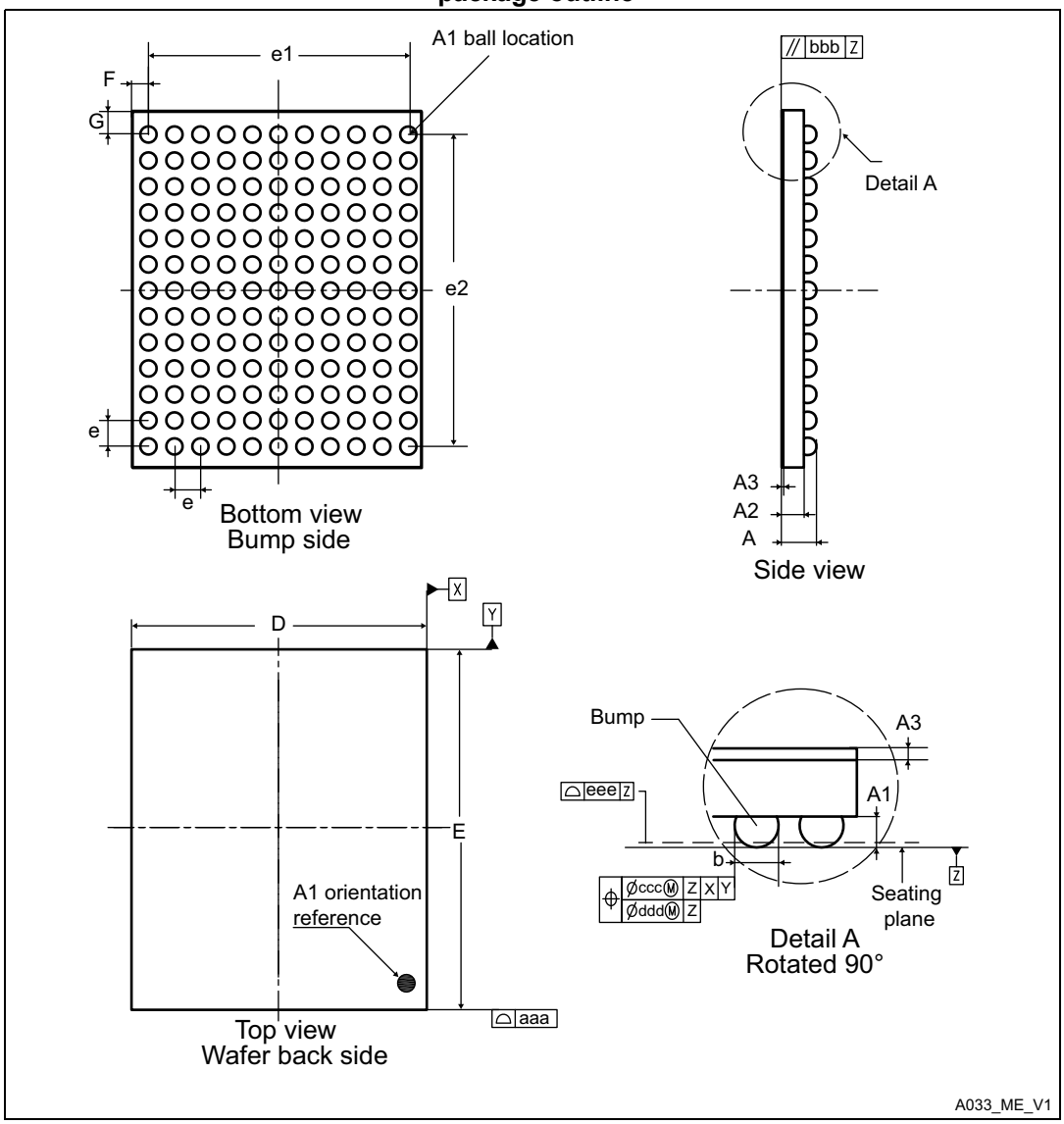

1. Drawing is not to scale.

Table 115. WLCSP143, 4.539x 5.849 mm, 0.4 mm pitch wafer level chip scale package mechanical data

Symbol	millimeters			inches(1)		
	Min	Typ	Max	Min	Typ	Max
A	0.525	0.555	0.585	0.0207	0.0219	0.0230
A1	-	0.175	-	-	0.0069	-

Table 115. WLCSP143, 4.539x 5.849 mm, 0.4 mm pitch wafer level chip scale package mechanical data (continued)

Symbol	millimeters			inches[1]		
	Min	Typ	Max	Min	Typ	Max
A2	-	0.380	-	-	0.0150	-
A3[2]	-	0.025	-	-	0.0010	-
b[3]	0.220	0.250	0.280	0.0087	0.0098	0.0110
D	4.504	4.539	4.574	0.1773	0.1787	0.1801
E	5.814	5.849	5.884	0.2289	0.2303	0.2317
e	-	0.400	-	-	0.0157	-
e1	-	4.000	-	-	0.1575	-
e2	-	4.800	-	-	0.1890	-
F	-	0.2695	-	-	0.0106	-
G	-	0.5245	-	-	0.0206	-
aaa	-	-	0.100	-	-	0.0039
bbb	-	-	0.100	-	-	0.0039
ccc	-	-	0.100	-	-	0.0039
ddd	-	-	0.050	-	-	0.0020
eee	-	-	0.050	-	-	0.0020

1. Values in inches are converted from mm and rounded to 4 decimal digits.
2. Back side coating.
3. Dimension is measured at the maximum bump diameter parallel to primary datum Z.

Figure 86. WLCSP143, 4.539x 5.849 mm, 0.4 mm pitch wafer level chip scale package recommended footprint

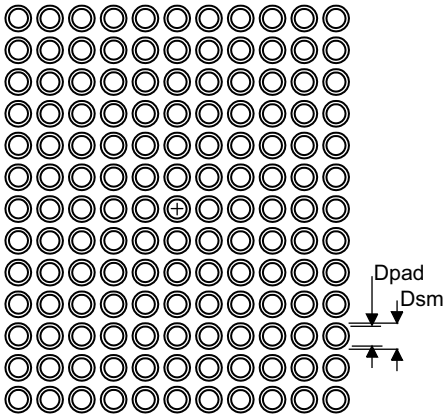

Table 116. WLCSP143 recommended PCB design rules

Dimension	Recommended values
Pitch	0.4
Dpad	0.225 mm
Dsm	0.290 mm typ. (depends on the soldermask registration tolerance)
Stencil opening	0.250 mm
Stencil thickness	0.100 mm

Marking of engineering samples

The following figure gives an example of topside marking orientation versus ball A1 identifier location.

Figure 87. WLCSP143, 0.4 mm pitch wafer level chip scale package top view example

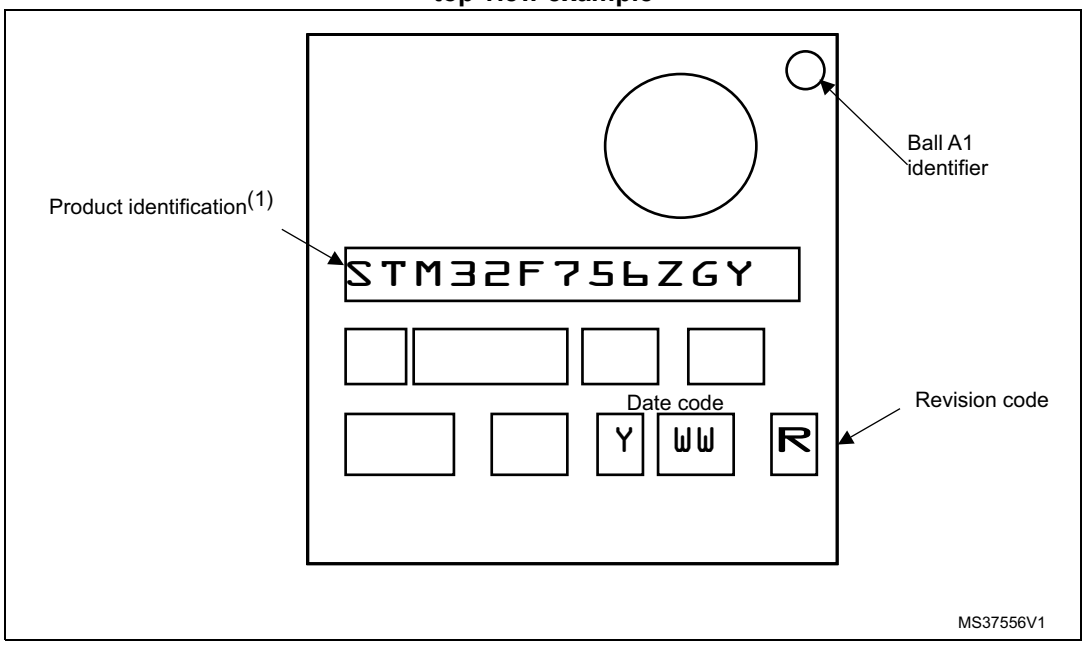

1. Parts marked as “ES”, “E” or accompanied by an Engineering Sample notification letter, are not yet qualified and therefore not yet ready to be used in production and any consequences deriving from such usage will not be at ST charge. In no event, ST will be liable for any customer usage of these engineering samples in production. ST Quality has to be contacted prior to any decision to use these Engineering samples to run qualification activity.

6.4 LQFP144, 20 x 20 mm low-profile quad flat package information

Figure 88. LQFP144, 20 x 20 mm, 144-pin low-profile quad flat package outline

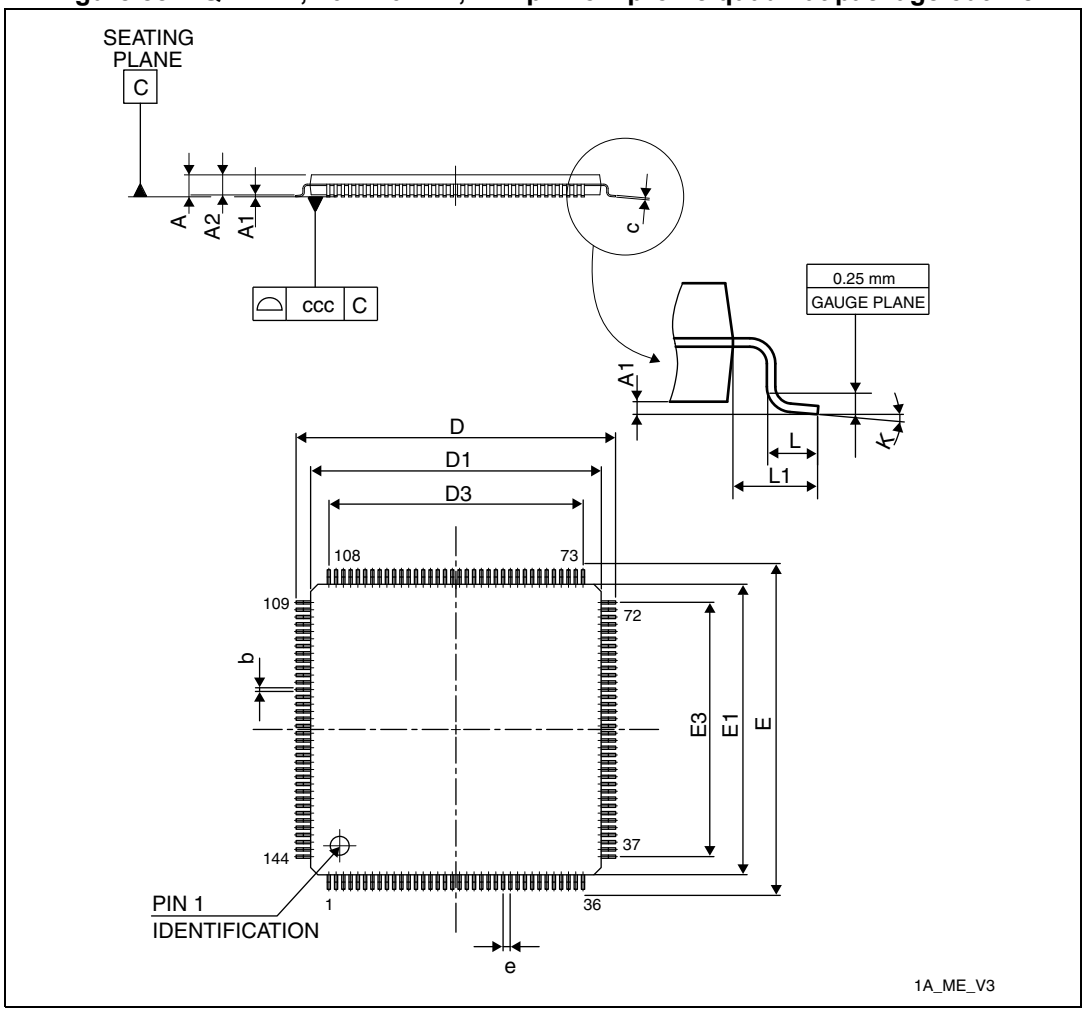

1. Drawing is not to scale.

Table 117. LQFP144, 20 x 20 mm, 144-pin low-profile quad flat package mechanical data

Symbol	millimeters			inches(1)		
	Min	Typ	Max	Min	Typ	Max
A	-	-	1.600	-	-	0.0630
A1	0.050	-	0.150	0.0020	-	0.0059
A2	1.350	1.400	1.450	0.0531	0.0551	0.0571
b	0.170	0.220	0.270	0.0067	0.0087	0.0106
c	0.090	-	0.200	0.0035	-	0.0079
D	21.800	22.000	22.200	0.8583	0.8661	0.874

Table 117. LQFP144, 20 x 20 mm, 144-pin low-profile quad flat package mechanical data (continued)

Symbol	millimeters			inches[1]		
	Min	Typ	Max	Min	Typ	Max
D1	19.800	20.000	20.200	0.7795	0.7874	0.7953
D3	-	17.500	-	-	0.689	-
E	21.800	22.000	22.200	0.8583	0.8661	0.8740
E1	19.800	20.000	20.200	0.7795	0.7874	0.7953
E3	-	17.500	-	-	0.6890	-
e	-	0.500	-	-	0.0197	-
L	0.450	0.600	0.750	0.0177	0.0236	0.0295
L1	-	1.000	-	-	0.0394	-
k	0°	3.5°	7°	0°	3.5°	7°
ccc	-	-	0.080	-	-	0.0031

1. Values in inches are converted from mm and rounded to 4 decimal digits.

Figure 89. LQFP144, 20 x 20 mm, 144-pin low-profile quad flat package recommended footprint

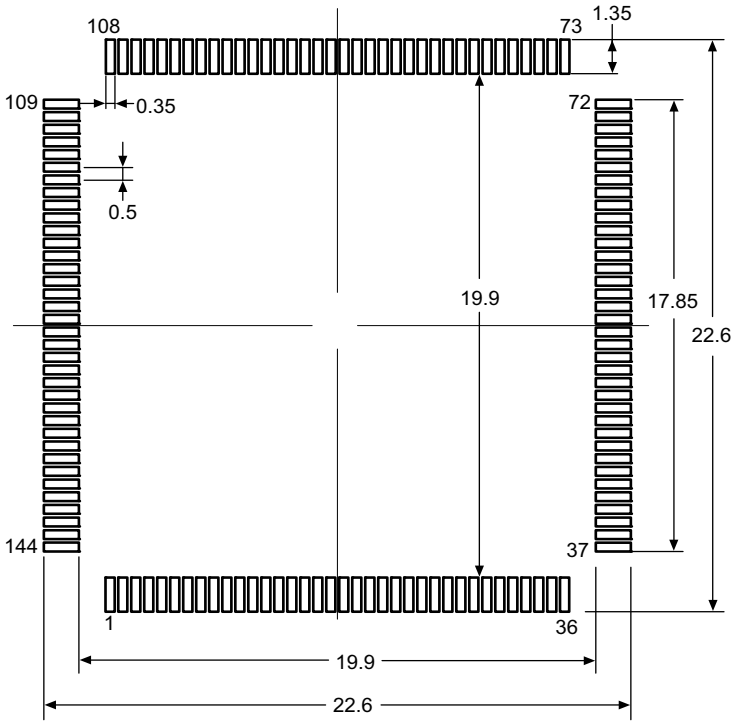

1. Dimensions are expressed in millimeters.

Marking of engineering samples

The following figure gives an example of topside marking orientation versus pin 1 identifier location.

Figure 90. LQFP144, 20 x 20mm, 144-pin low-profile quad flat package top view example

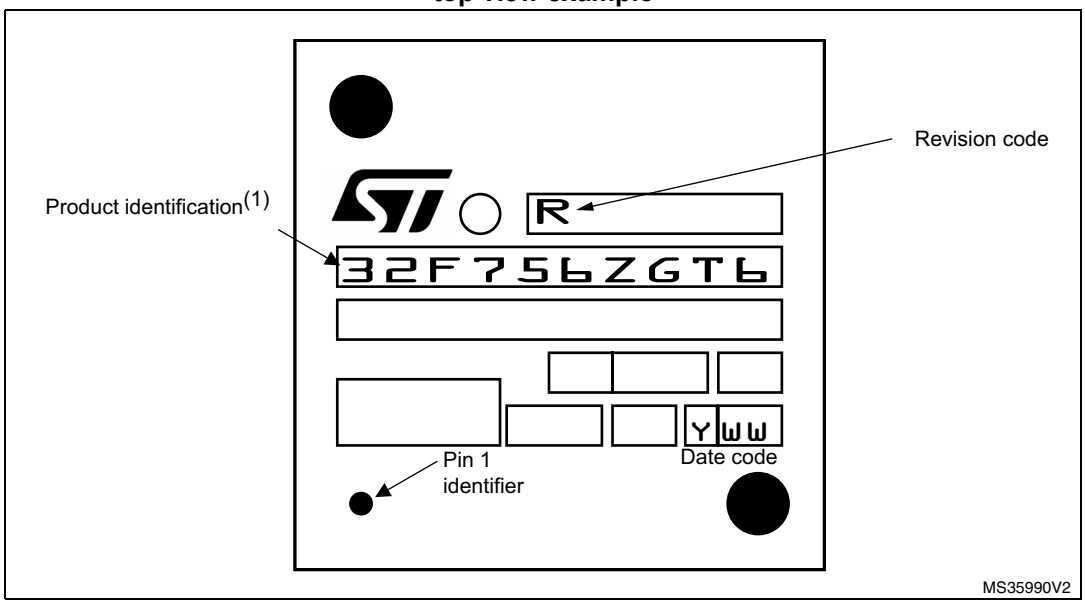

1. Parts marked as “ES”, “E” or accompanied by an Engineering Sample notification letter, are not yet qualified and therefore not yet ready to be used in production and any consequences deriving from such usage will not be at ST charge. In no event, ST will be liable for any customer usage of these engineering samples in production. ST Quality has to be contacted prior to any decision to use these Engineering samples to run qualification activity.

6.5 LQFP176, 24 x 24 mm low-profile quad flat package information

Figure 91. LQFP176, 24 x 24 mm, 176-pin low-profile quad flat package outline

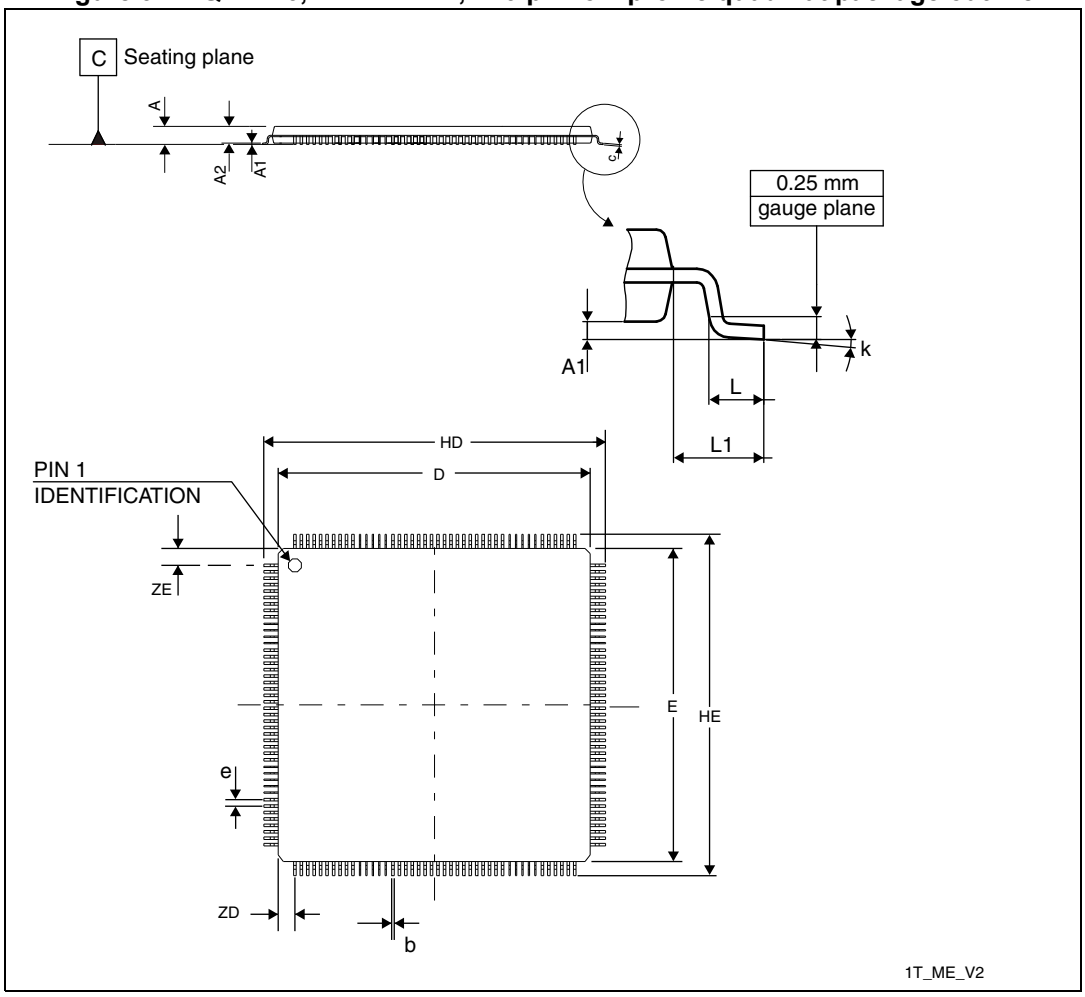

1. Drawing is not to scale.

Table 118. LQFP176, 24 x 24 mm, 176-pin low-profile quad flat package mechanical data

Symbol	millimeters			inches(1)		
	Min	Typ	Max	Min	Typ	Max
A	-	-	1.600	-	-	0.0630
A1	0.050	-	0.150	0.0020	-	0.0059
A2	1.350	-	1.450	0.0531	-	0.0060
b	0.170	-	0.270	0.0067	-	0.0106
C	0.090	-	0.200	0.0035	-	0.0079
D	23.900	-	24.100	0.9409	-	0.9488

Table 118. LQFP176, 24 x 24 mm, 176-pin low-profile quad flat package mechanical data (continued)

Symbol	millimeters			inches[1]		
	Min	Typ	Max	Min	Typ	Max
E	23.900	-	24.100	0.9409	-	0.9488
e	-	0.500	-	-	0.0197	-
HD	25.900	-	26.100	1.0200	-	1.0276
HE	25.900	-	26.100	1.0200	-	1.0276
L	0.450	-	0.750	0.0177	-	0.0295
L1	-	1.000	-	-	0.0394	-
ZD	-	1.250	-	-	0.0492	-
ZE	-	1.250	-	-	0.0492	-
ccc	-	-	0.080	-	-	0.0031
k	0 °	-	7 °	0 °	-	7 °

1. Values in inches are converted from mm and rounded to 4 decimal digits.

Figure 92. LQFP176, 24 x 24 mm, 176-pin low-profile quad flat package recommended footprint

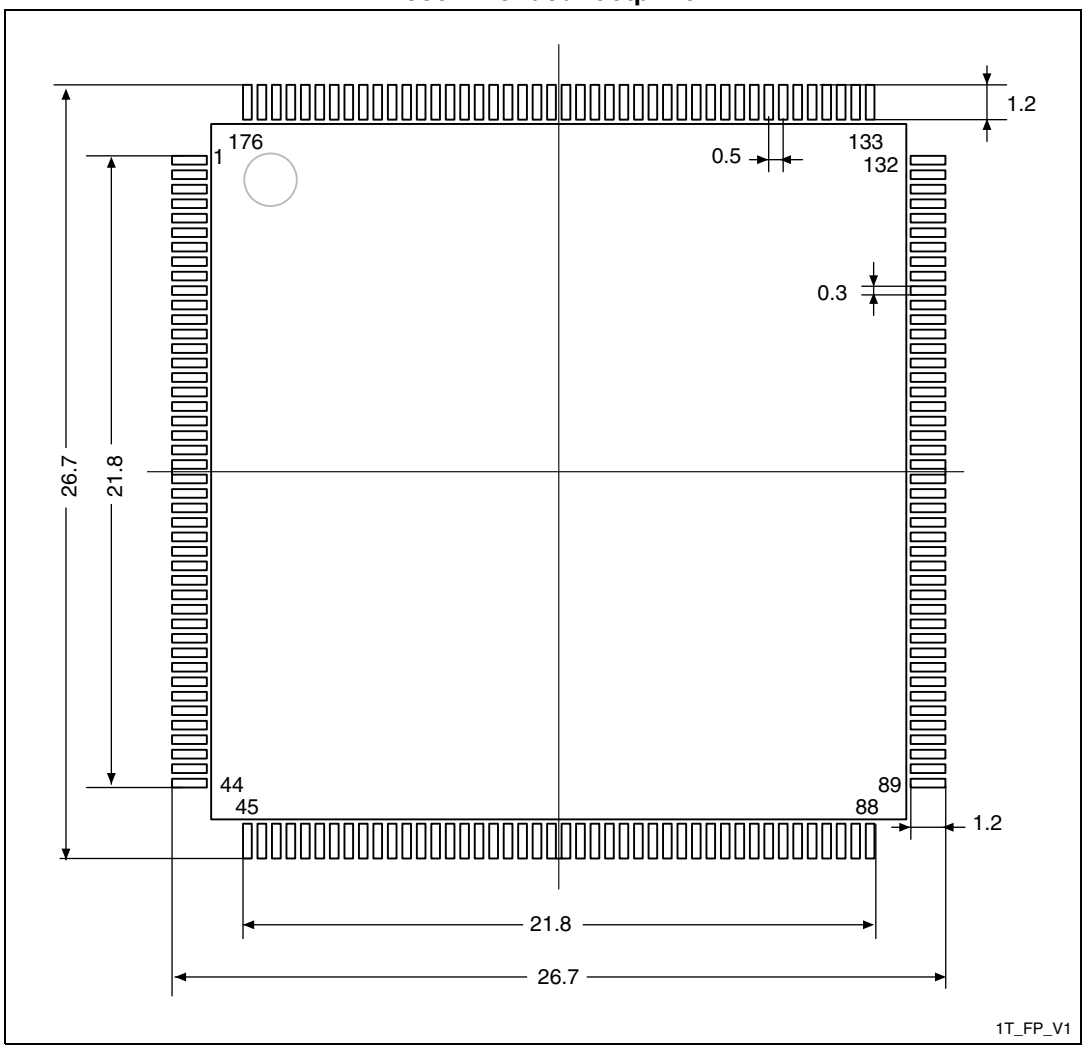

1. Dimensions are expressed in millimeters.

Marking of engineering samples

The following figure gives an example of topside marking orientation versus pin 1 identifier location.

Figure 93. LQFP176, 24 x 24 mm, 176-pin low-profile quad flat package top view example

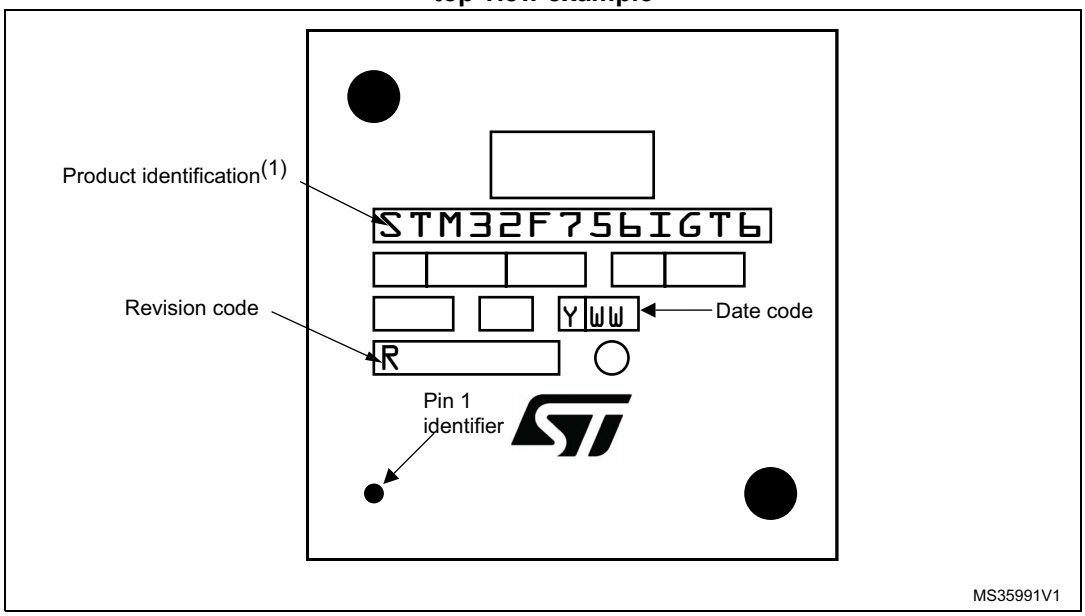

1. Parts marked as “ES”, “E” or accompanied by an Engineering Sample notification letter, are not yet qualified and therefore not yet ready to be used in production and any consequences deriving from such usage will not be at ST charge. In no event, ST will be liable for any customer usage of these engineering samples in production. ST Quality has to be contacted prior to any decision to use these Engineering samples to run qualification activity.

6.6 LQFP208, 28 x 28 mm low-profile quad flat package information

Figure 94. LQFP208, 28 x 28 mm, 208-pin low-profile quad flat package outline

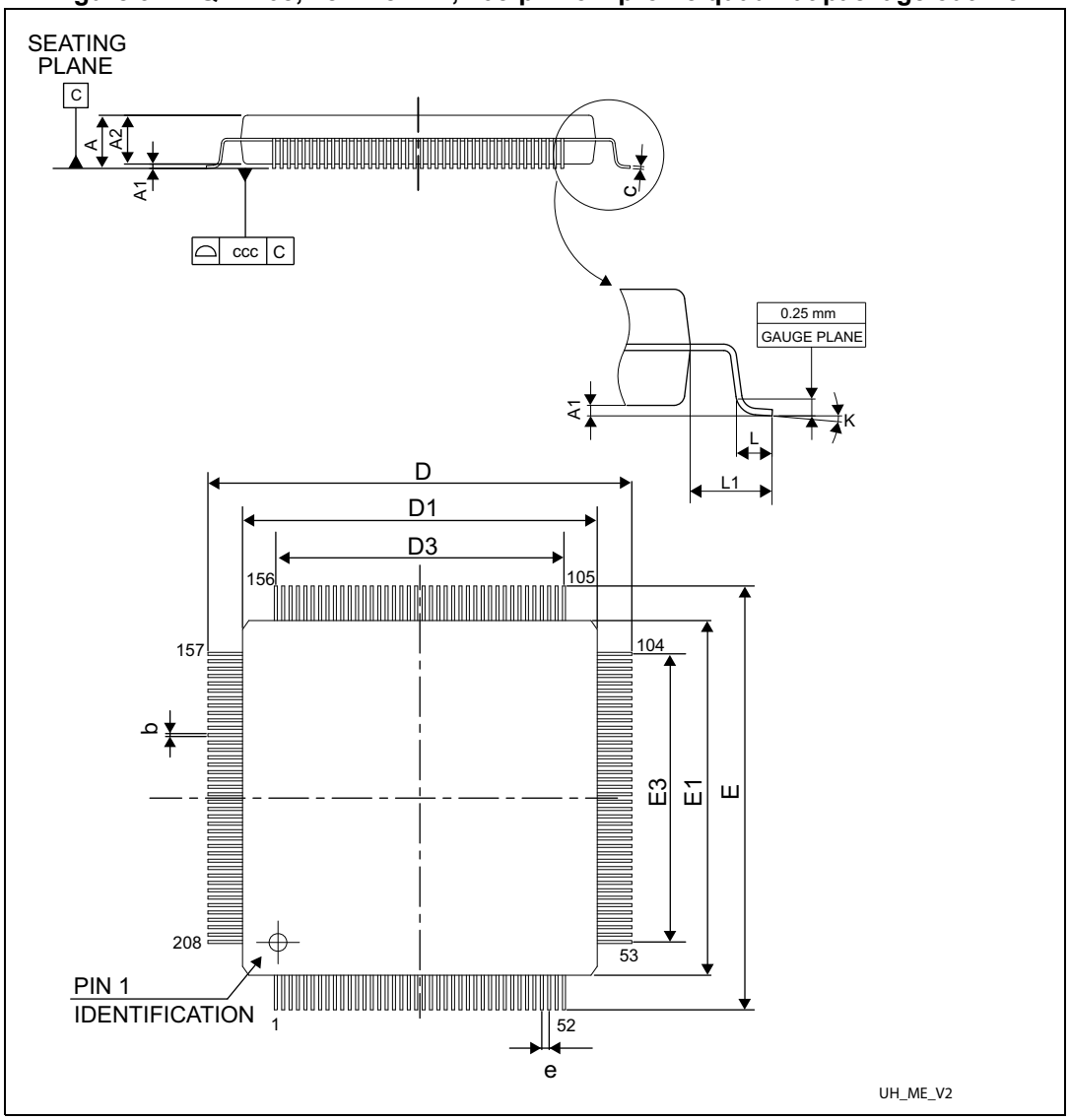

1. Drawing is not to scale.

Table 119. LQFP208, 28 x 28 mm, 208-pin low-profile quad flat package mechanical data

Symbol	millimeters			inches(1)		
	Min	Typ	Max	Min	Typ	Max
A	-	-	1.600	--	-	0.0630
A1	0.050	-	0.150	0.0020	-	0.0059
A2	1.350	1.400	1.450	0.0531	0.0551	0.0571

Table 119. LQFP208, 28 x 28 mm, 208-pin low-profile quad flat package mechanical data (continued)

Symbol	millimeters			inches[1]		
	Min	Typ	Max	Min	Typ	Max
b	0.170	0.220	0.270	0.0067	0.0087	0.0106
c	0.090	-	0.200	0.0035	-	0.0079
D	29.800	30.000	30.200	1.1732	1.1811	1.1890
D1	27.800	28.000	28.200	1.0945	1.1024	1.1102
D3	-	25.500	-	-	1.0039	-
E	29.800	30.000	30.200	1.1732	1.1811	1.1890
E1	27.800	28.000	28.200	1.0945	1.1024	1.1102
E3	-	25.500	-	-	1.0039	-
e	-	0.500	-	-	0.0197	-
L	0.450	0.600	0.750	0.0177	0.0236	0.0295
L1	-	1.000	-	-	0.0394	-
k	0°	3.5°	7.0°	0°	3.5°	7.0°
ccc	-	-	0.080	-	-	0.0031

1. Values in inches are converted from mm and rounded to 4 decimal digits.

Figure 95. LQFP208, 28 x 28 mm, 208-pin low-profile quad flat package recommended footprint

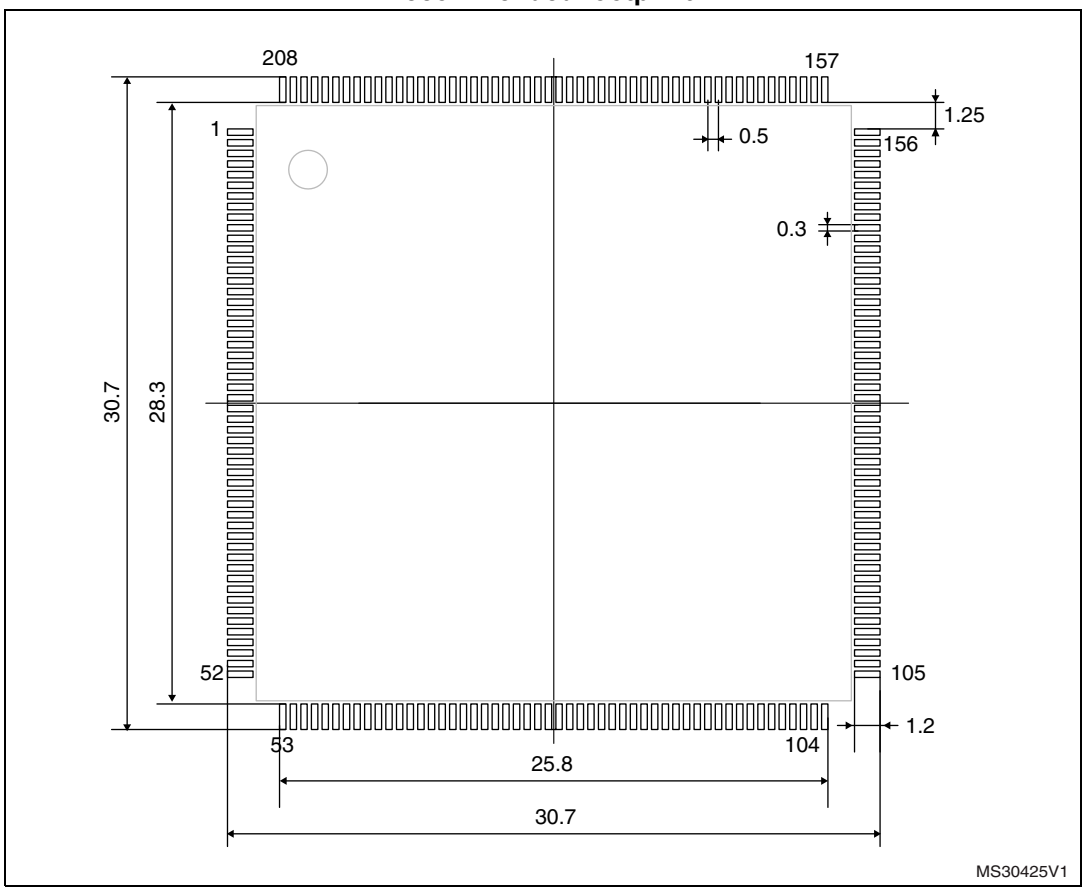

1. Dimensions are expressed in millimeters.

Marking of engineering samples

The following figure gives an example of topside marking orientation versus pin 1 identifier location.

Figure 96. LQFP208, 28 x 28 mm, 208-pin low-profile quad flat package top view example

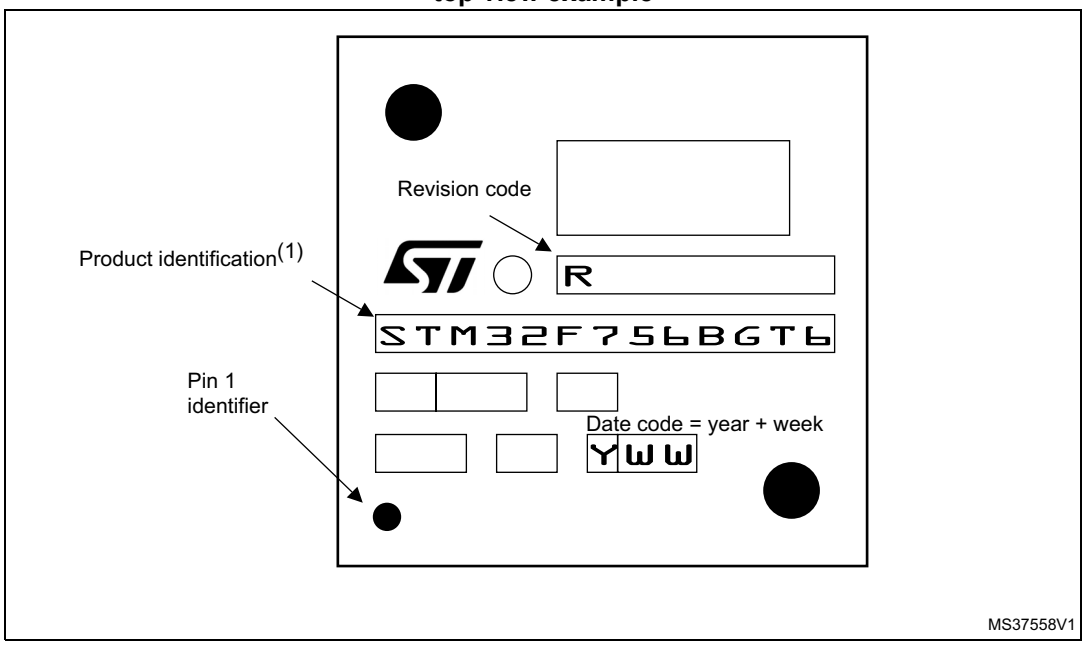

1. Parts marked as “ES”, “E” or accompanied by an Engineering Sample notification letter, are not yet qualified and therefore not yet ready to be used in production and any consequences deriving from such usage will not be at ST charge. In no event, ST will be liable for any customer usage of these engineering samples in production. ST Quality has to be contacted prior to any decision to use these Engineering samples to run qualification activity.

6.7 UFBGA 176+25, 10 x 10 x 0.65 mm ultra thin-pitch ball grid array package information

Figure 97. UFBGA 176+25, 10 × 10 × 0.65 mm ultra thin fine-pitch ball grid array package outline

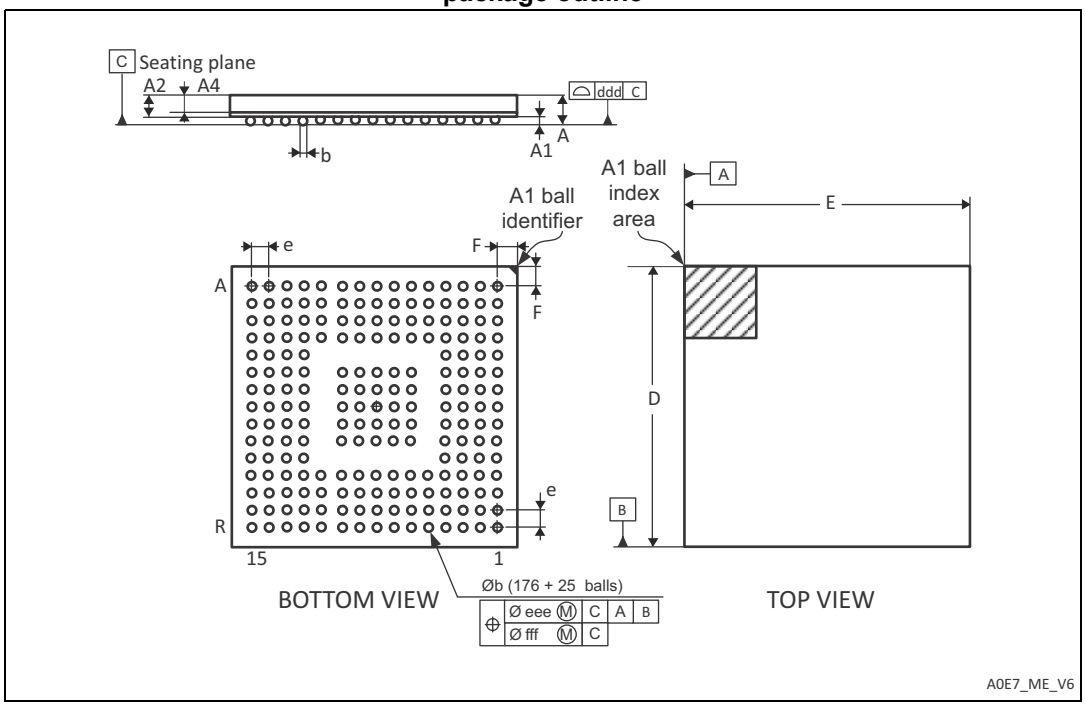

1. Drawing is not to scale.

Table 120. UFBGA 176+25, 10 × 10 × 0.65 mm ultra thin fine-pitch ball grid array package mechanical data

Symbol	millimeters			inches(1)		
	Min	Typ	Max	Min	Typ	Max
A	0.460	0.530	0.600	0.0181	0.0209	0.0236
A1	0.050	0.080	0.110	0.002	0.0031	0.0043
A2	0.400	0.450	0.500	0.0157	0.0177	0.0197
b	0.230	0.280	0.330	0.0091	0.0110	0.0130
D	9.950	10.000	10.050	0.3917	0.3937	0.3957
E	9.950	10.000	10.050	0.3917	0.3937	0.3957
e	-	0.650	-	-	0.0256	-
F	0.400	0.450	0.500	0.0157	0.0177	0.0197
ddd	-	-	0.080	-	-	0.0031
eee	-	-	0.150	-	-	0.0059
fff	-	-	0.080	-	-	0.0031

1. Values in inches are converted from mm and rounded to 4 decimal digits.

Figure 98. UFBGA176+25, 10 x 10 x 0.65 mm, ultra fine-pitch ball grid array package recommended footprint

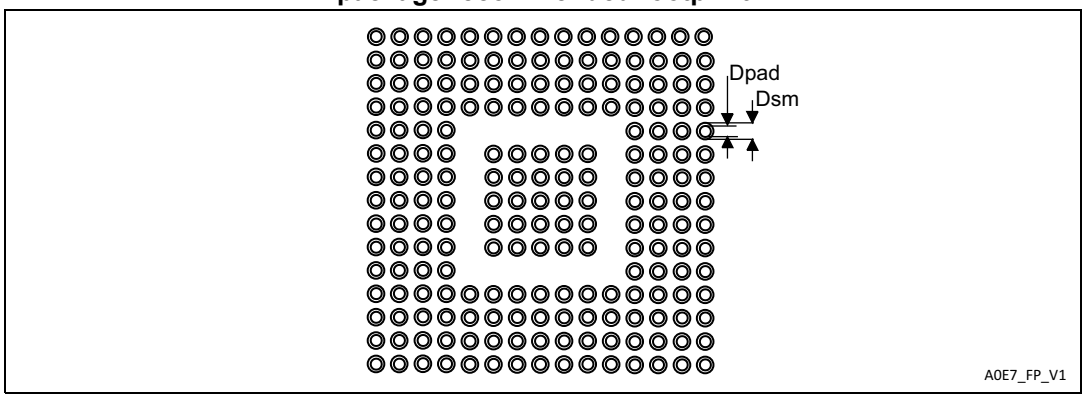

Table 121. UFBGA176+25 recommended PCB design rules (0.65 mm pitch BGA)

Dimension	Recommended values
Pitch	0.65 mm
Dpad	0.300 mm
Dsm	0.400 mm typ. (depends on the soldermask registration tolerance)
Stencil opening	0.300 mm
Stencil thickness	Between 0.100 mm and 0.125 mm
Pad trace width	0.100 mm

Marking of engineering samples

The following figure gives an example of topside marking orientation versus ball A1 identifier location.

Figure 99. UFBGA 176+25, 10 × 10 × 0.6 mm ultra thin fine-pitch ball grid array package top view example

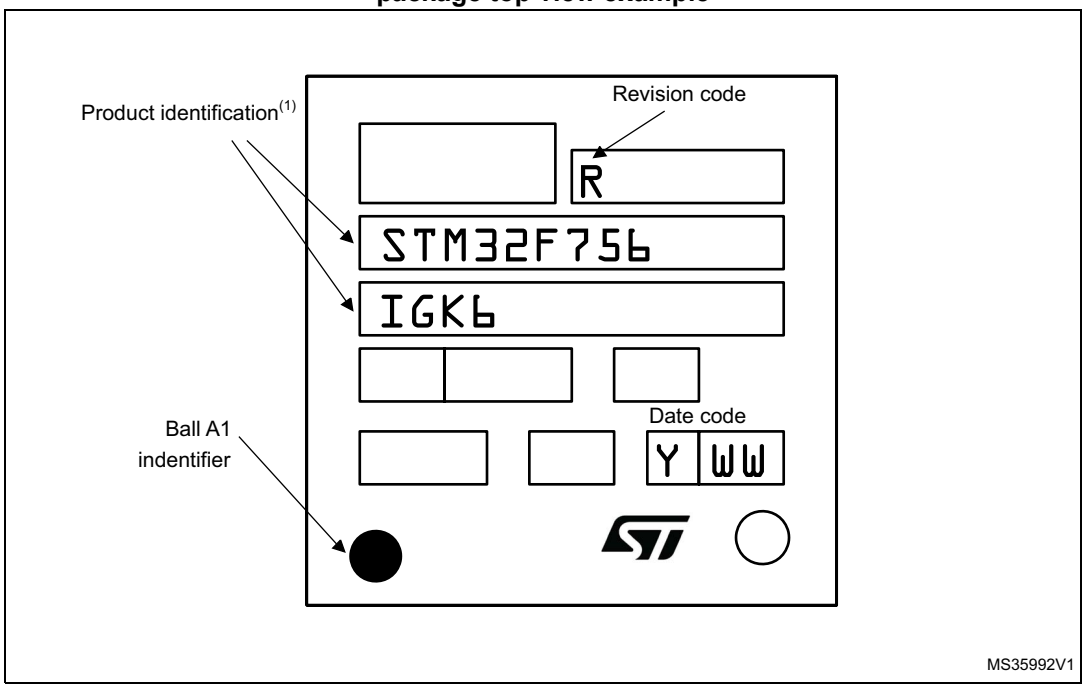

1. Parts marked as “ES”, “E” or accompanied by an Engineering Sample notification letter, are not yet qualified and therefore not yet ready to be used in production and any consequences deriving from such usage will not be at ST charge. In no event, ST will be liable for any customer usage of these engineering samples in production. ST Quality has to be contacted prior to any decision to use these Engineering samples to run qualification activity.

6.8 TFBGA216, 13 × 13 × 0.8 mm thin fine-pitch ball grid array package information

Figure 100. TFBGA216, 13 × 13 × 0.8 mm thin fine-pitch ball grid array package outline

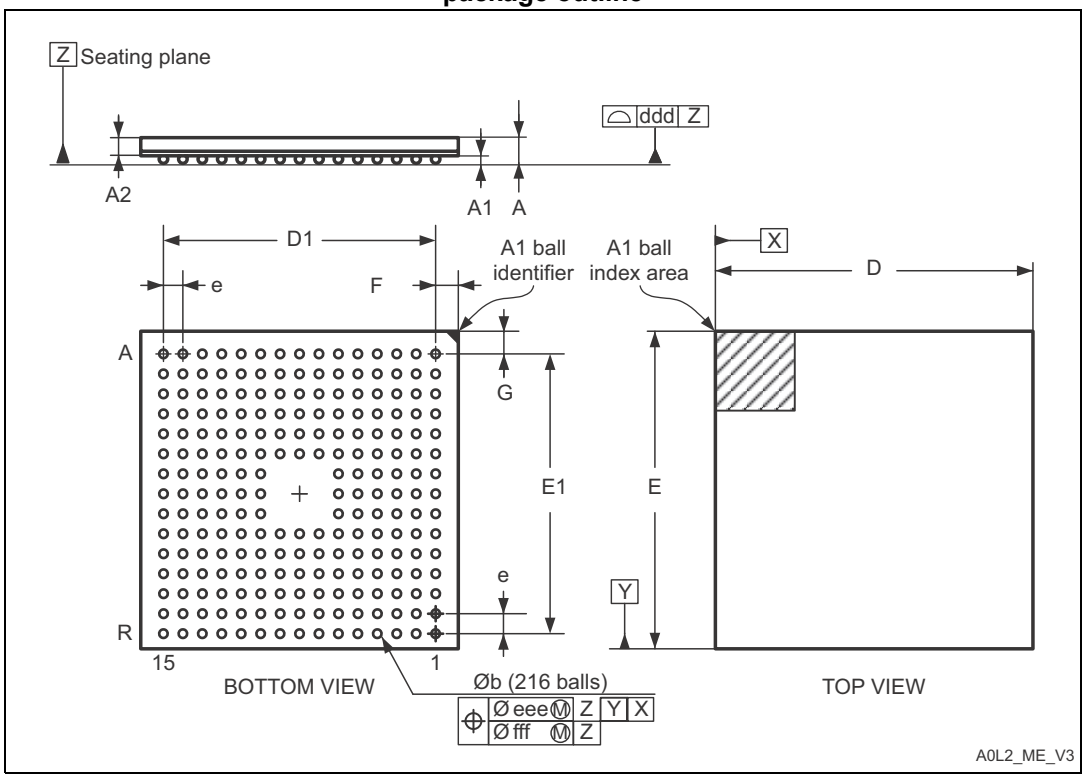

1. Drawing is not to scale.

Table 122. TFBGA216, 13 × 13 × 0.8 mm thin fine-pitch ball grid array package mechanical data

Symbol	millimeters			inches(1)		
	Min	Typ	Max	Min	Typ	Max
A	-	-	1.100	-	-	0.0433
A1	0.150	-	-	0.0059	-	-
A2	-	0.760	-	-	0.0299	-
b	0.350	0.400	0.450	0.0138	0.0157	0.0177
D	12.850	13.000	13.150	0.5118	0.5118	0.5177
D1	-	11.200	-	-	0.4409	-
E	12.850	13.000	13.150	0.5118	0.5118	0.5177
E1	-	11.200	-	-	0.4409	-
e	-	0.800	-	-	0.0315	-
F	-	0.900	-	-	0.0354	-

Table 122. TFBGA216, 13 × 13 × 0.8 mm thin fine-pitch ball grid array package mechanical data (continued)

Symbol	millimeters			inches[1]		
	Min	Typ	Max	Min	Typ	Max
G	-	0.900	-	-	0.0354	-
ddd	-	-	0.100	-	-	0.0039
eee	-	-	0.150	-	-	0.0059
fff	-	-	0.080	-	-	0.0031

1. Values in inches are converted from mm and rounded to 4 decimal digits.

Figure 101. TFBGA216, 13 x 13 x 0.8 mm thin fine-pitch ball grid array package recommended footprint

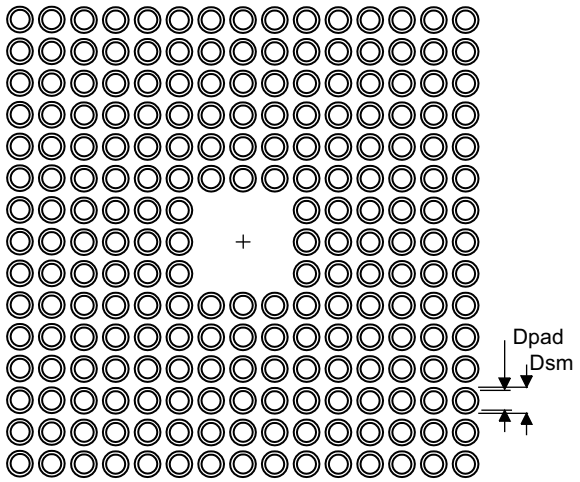

Table 123. TFBGA216 recommended PCB design rules (0.8 mm pitch BGA)

Dimension	Recommended values
Pitch	0.8
Dpad	0.400 mm
Dsm	0.470 mm typ. (depends on the soldermask registration tolerance)
Stencil opening	0.400 mm
Stencil thickness	Between 0.100 mm and 0.125 mm
Pad trace width	0.120 mm

Marking of engineering samples

The following figure gives an example of topside marking orientation versus ball A1 identifier location.

Figure 102. TFBGA216, 13 × 13 × 0.8 mm thin fine-pitch ball grid array package top view example

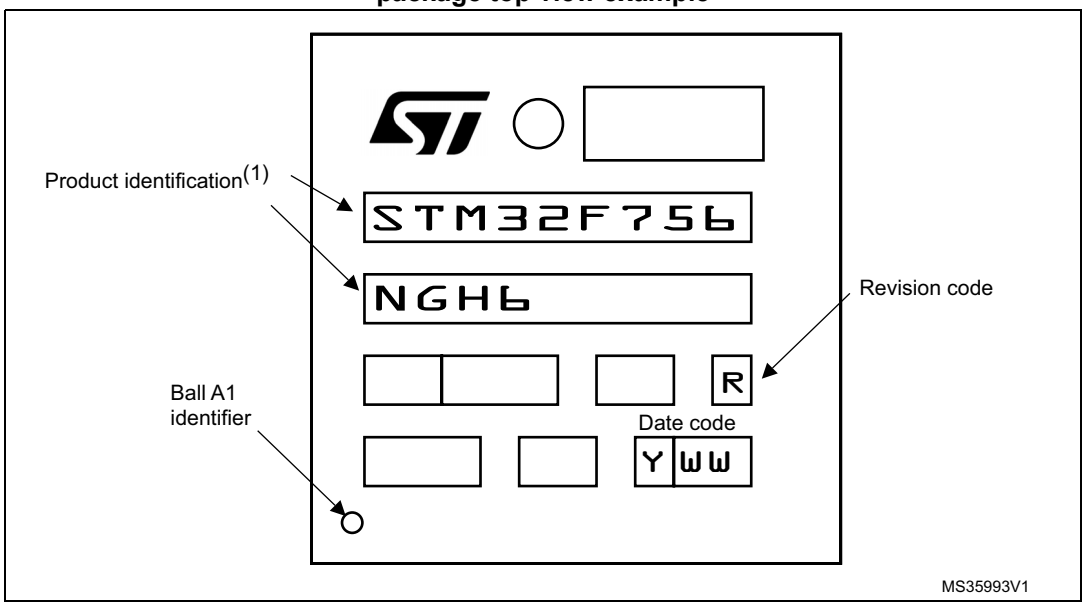

1. Parts marked as “ES”, “E” or accompanied by an Engineering Sample notification letter, are not yet qualified and therefore not yet ready to be used in production and any consequences deriving from such usage will not be at ST charge. In no event, ST will be liable for any customer usage of these engineering samples in production. ST Quality has to be contacted prior to any decision to use these Engineering samples to run qualification activity.

6.9 Thermal characteristics

The maximum chip-junction temperature, T_J max, in degrees Celsius, may be calculated using the following equation:

T_J max = T_A max + (P_D max x Θ_{JA})

Where:

- T_A max is the maximum ambient temperature in °C,
- Θ_{JA} is the package junction-to-ambient thermal resistance, in °C/W,
- P_D max is the sum of P_{INT} max and $P_{I/O}$ max (P_D max = P_{INT} max + $P_{I/O}$max),
- P_{INT} max is the product of I_{DD} and V_{DD}, expressed in Watts. This is the maximum chip internal power.

$P_{I/O}$ max represents the maximum power dissipation on output pins where:

$P_{I/O}$ max = Σ (V_{OL} × I_{OL}) + Σ((V_{DD} – V_{OH}) × I_{OH}),

taking into account the actual V_{OL} / I_{OL} and V_{OH} / I_{OH} of the I/Os at low and high level in the application.

Table 124. Package thermal characteristics

Symbol	Parameter	Value	Unit
Θ_{JA}	**Thermal resistance junction-ambient** LQFP100 - 14 × 14 mm / 0.5 mm pitch	43	°C/W
	Thermal resistance junction-ambient TFBGA100 - 8 × 8 mm / 0.8 mm pitch	57	
	Thermal resistance junction-ambient WLCSP143	31.2	
	Thermal resistance junction-ambient LQFP144 - 20 × 20 mm / 0.5 mm pitch	40	
	Thermal resistance junction-ambient LQFP176 - 24 × 24 mm / 0.5 mm pitch	38	
	Thermal resistance junction-ambient LQFP208 - 28 × 28 mm / 0.5 mm pitch	19	
	Thermal resistance junction-ambient UFBGA176 - 10 × 10 mm / 0.5 mm pitch	39	
	Thermal resistance junction-ambient TFBGA216 - 13 × 13 mm / 0.8 mm pitch	29	

Reference document

JESD51-2 Integrated Circuits Thermal Test Method Environment Conditions - Natural Convection (Still Air). Available from www.jedec.org.

7 Part numbering

Table 125. Ordering information scheme

Example: STM32 F 756 V G T 6 xxx

Device family

STM32 = ARM-based 32-bit microcontroller

Product type

F = general-purpose

Device subfamily

756= STM32F756xx, USB OTG FS/HS,
camera interface, Ethernet, LCD-TFT, cryptographic acceleration

Pin count

V = 100 pins

Z = 143 and 144 pins

I = 176 pins

B = 208 pins

N = 216 pins

Flash memory size

E = 512 Kbytes of Flash memory

G = 1024 Kbytes of Flash memory

Package

T = LQFP

K = UFBGA

H = TFBGA

Y = WLCSP

Temperature range

6 = Industrial temperature range, –40 to 85 °C.

7 = Industrial temperature range, –40 to 105 °C.

Options

xxx = programmed parts

TR = tape and reel

For a list of available options (speed, package, etc.) or for further information on any aspect of this device, please contact your nearest ST sales office.

Appendix A Recommendations when using internal reset OFF

When the internal reset is OFF, the following integrated features are no longer supported:

- The integrated power-on reset (POR) / power-down reset (PDR) circuitry is disabled.
- The brownout reset (BOR) circuitry must be disabled.
- The embedded programmable voltage detector (PVD) is disabled.
- V_{BAT} functionality is no more available and VBAT pin should be connected to V_{DD}.
- The over-drive mode is not supported.

A.1 Operating conditions

Table 126. Limitations depending on the operating power supply range

Operating power supply range	ADC operation	Maximum Flash memory access frequency with no wait states ($f_{Flashmax}$)	Maximum Flash memory access frequency with wait states (1)(2)	I/O operation	Possible Flash memory operations
V_{DD} =1.7 to 2.1 V(3)	Conversion time up to 1.2 Msps	20 MHz	180 MHz with 8 wait states and over-drive OFF	– No I/O compensation	8-bit erase and program operations only

1. Applicable only when the code is executed from Flash memory. When the code is executed from RAM, no wait state is required.
2. Thanks to the ART accelerator on ITCM interface and L1-cache on AXI interface, the number of wait states given here does not impact the execution speed from the Flash memory since the ART accelerator or L1-cache allows to achieve a performance equivalent to 0-wait state program execution.
3. V_{DD}/V_{DDA} minimum value of 1.7 V, with the use of an external power supply supervisor (refer to *Section 2.17.1: Internal reset ON*).

Revision history

Table 127. Document revision history

Date	Revision	Changes
26-May-2015	1	Initial release.
20-Oct-2015	2	Updated *Table 53: ESD absolute maximum ratings* adding packages. Updated note of *Table 32: Typical and maximum current consumptions in Standby mode*. Updated *Figure 11: STM32F756Vx LQFP100 pinout* replacing PB13 and PB14 by PE13 and PE14. Updated *Table 51: EMS characteristics* replacing 168 MHz by 216 MHz. Updated *Section 2.9: Quad-SPI memory interface (QUADSPI)* removing 'STM32F75xx'. Removed Table 86. Ethernet DC electrical characteristics. Updated all the notes removing 'not tested in production'. Updated *Table 43: Main PLL characteristics*, *Table 44: PLLI2S characteristics* and *Table 45: PLLISAI characteristics* fVCO_OUT output at min value '100' and VCO freq at 100 MHz. Updated *Table 13: STM32F756xx register boundary addresses* replacing cortex-M4 by Cortex-M7. Updated *Table 87: Dynamics characteristics: Ethernet MAC signals for MII* td (TXEN) and td (TXD) min value at 6.5 ns.

Table 127. Document revision history (continued)

Date	Revision	Changes
10-Dec-2015	3	Updated *Table 10: STM32F756xx pin and ball definition* additional function column: WKUP1, 2, 3, 4, 5, 6 must be respectively PA0, PA2, PC1, PC13, PI8, PI11. Updated *Table 62: ADC characteristics* adding V_{REF-} negative voltage reference. Update *Table 14: Voltage characteristics* adding table note 3. Updated *Table 69: Temperature sensor calibration values* memory addresses. Updated *Table 72: Internal reference voltage calibration values* memory addresses.
16-Feb-2016	4	Updated *Table 52: EMI characteristics* modifying 25/180 MHz by 25/200 MHz. Updated *Figure 13: STM32F756Zx WLCSP143 ballout*. Added TFBGA100 8 x 8 mm package: – Updated Cover page. – Updated *Section 1: Description*. – Updated *Table 2: STM32F756xx features and peripheral counts*. – Updated *Table 4: Regulator ON/OFF and internal reset ON/OFF availability*. – Updated *Section 3: Pinouts and pin description* adding *Figure 12: STM32F756Vx TFBGA100 ballout* and adding TFBGA100 ball description in *Table 10: STM32F756xx pin and ball definition*. – Updated *Table 17: General operating conditions*. – Updated *Table 53: ESD absolute maximum ratings*. – Updated notes below *Figure 43* and *Figure 44*. – Updated *Section 6: Package information* adding *Section 6.2: TFBGA100, 8 x 8 x 0.8 mm thin fine-pitch ball grid array package information* and adding thermal resistance in *Table 124: Package thermal characteristics*. – Updated *Table 10: STM32F756xx pin and ball definition* note 5. Updated *Table 35: Peripheral current consumption* peripheral consumption on APB1 and APB2. Updated *Figure 18: STM32F756Nx TFBGA216 ballout*.

IMPORTANT NOTICE – PLEASE READ CAREFULLY

STMicroelectronics NV and its subsidiaries (“ST”) reserve the right to make changes, corrections, enhancements, modifications, and improvements to ST products and/or to this document at any time without notice. Purchasers should obtain the latest relevant information on ST products before placing orders. ST products are sold pursuant to ST’s terms and conditions of sale in place at the time of order acknowledgement.

Purchasers are solely responsible for the choice, selection, and use of ST products and ST assumes no liability for application assistance or the design of Purchasers’ products.

No license, express or implied, to any intellectual property right is granted by ST herein.

Resale of ST products with provisions different from the information set forth herein shall void any warranty granted by ST for such product.

ST and the ST logo are trademarks of ST. All other product or service names are the property of their respective owners.

Information in this document supersedes and replaces information previously supplied in any prior versions of this document.

© 2016 STMicroelectronics – All rights reserved