Features

- SUBMINIATURE PACKAGE.
- WIDE VIEWING ANGLE.
- Z-BEND LEAD.
- LONG LIFE-SOLID STATE RELIABILITY.
- LOW PACKAGE PROFILE.
- PACKAGE : 1000PCS / REEL.
- MOISTURE SENSITIVITY LEVEL : LEVEL 3.
- RoHS COMPLIANT.

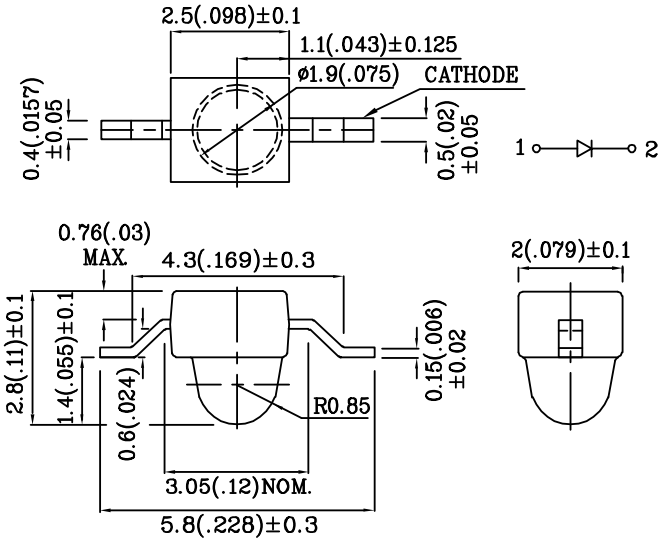

Notes:

1. All dimensions are in millimeters (inches).
2. Tolerance is ±0.25(0.01") unless otherwise noted.

Absolute Maximum Ratings (T_A=25°C)		**VG (InGaAlP)**	**Unit**
Reverse Voltage	V_R	5	V
Forward Current	I_F	30	mA
Forward Current (Peak) 1/10 Duty Cycle 0.1ms Pulse Width	i_{FS}	150	mA
Power Dissipation	P_T	105	mW
Operating Temperature	T_A	-40 ~ +85	°C
Storage Temperature	Tstg	-40 ~ +85	

Operating Characteristics (T_A=25°C)		**VG (InGaAlP)**	**Unit**
Forward Voltage (Typ.) (I_F=20mA)	V_F	2.1	V
Forward Voltage (Max.) (I_F=20mA)	V_F	2.5	V
Reverse Current (Max.) (V_R=5V)	I_R	10	uA
Wavelength of Peak Emission (Typ.) (I_F=20mA)	λ p	574	nm
Wavelength of Dominant Emission (Typ.) (I_F=20mA)	λ D	570	nm
Spectral Line Full Width At Half-Maximum (Typ.) (I_F=20mA)	Δλ	20	nm
Capacitance (V_F=0V, f=1MHz)	C	15	pF

Part Number	Emitting Color	Emitting Material	Lens-color	Luminous Intensity (IF=20mA) mcd		Wavelength nm λ P	Viewing Angle 2 θ 1/2
				min.	typ.		
ZVG46W-9	Green	InGaAlP	Water Clear	110	397	574	20°

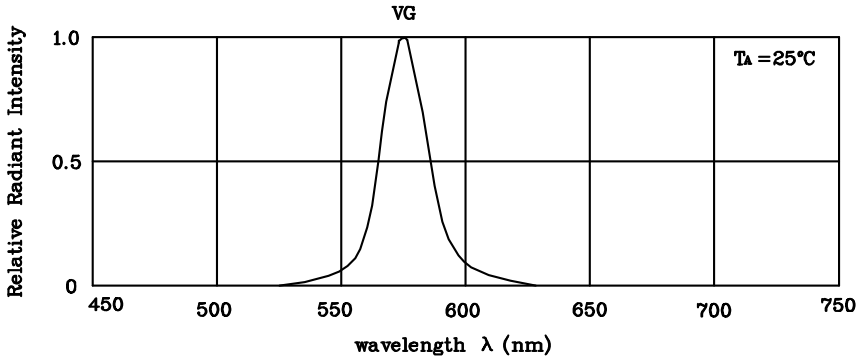

RELATIVE INTENSITY Vs. WAVELENGTH

❖ VG

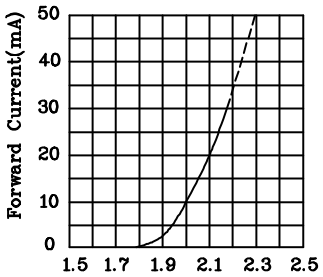

FORWARD CURRENT Vs.
FORWARD VOLTAGE

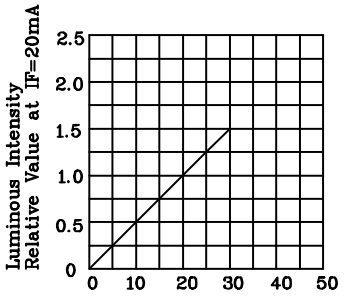

LUMINOUS INTENSITY Vs.
FORWARD CURRENT

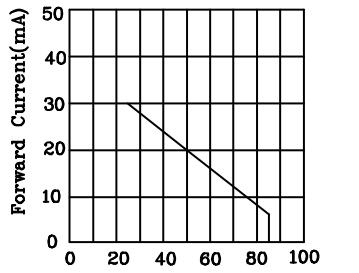

FORWARD CURRENT
DERATING CURVE

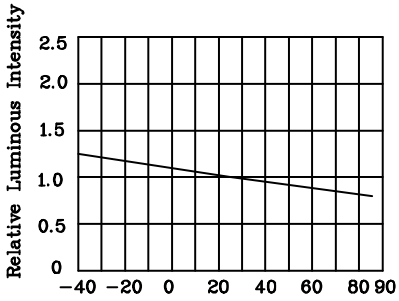

LUMINOUS INTENSITY Vs.
AMBIENT TEMPERATURE

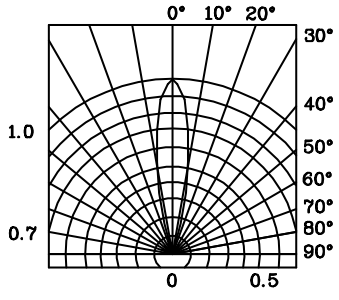

SPATIAL DISTRIBUTION

Reflow Soldering Profile For Lead-free SMT Process.

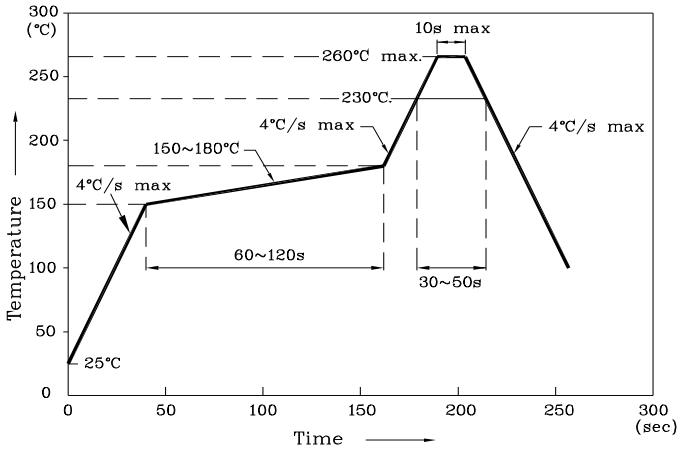

Notes:

1. Maximum soldering temperature should not exceed 260℃.
2. Recommended reflow temperature: 145℃-260℃.
3. Do not put stress to the epoxy resin during high temperatures conditions.

❖ Recommended Soldering Pattern (Units: mm ; Tolerance: ± 0.1)

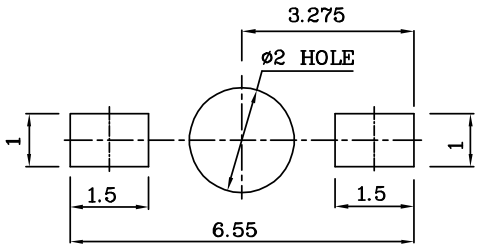

❖ Tape Specification (Units : mm)

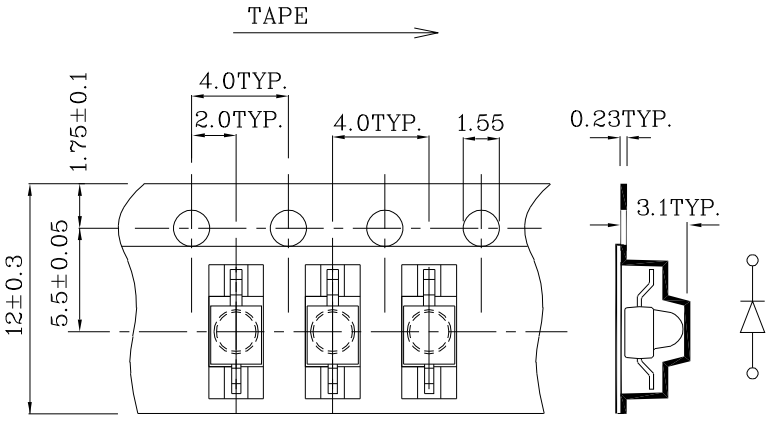

Remarks:

If special sorting is required (e.g. binning based on forward voltage, Luminous intensity / luminous flux, or wavelength), the typical accuracy of the sorting process is as follows:

1. Wavelength: +/-1nm
2. Luminous Intensity / Luminous Flux: +/-15%
3. Forward Voltage: +/-0.1V

Note: Accuracy may depend on the sorting parameters.