1 SCOPE

This specification shall cover the characteristics of the ceramic resonator with the type ZTTCS16.0MX

2 PART NO.

PART NUMBER	CUSTOMER PART NO.	SPECIFICATION NO.
ZTTCS16.0MX		

3 OUTLINE DRAWING AND STRUCTURE

3.1 Appearance

No visible damage and dirt.

3.2 Dimensions

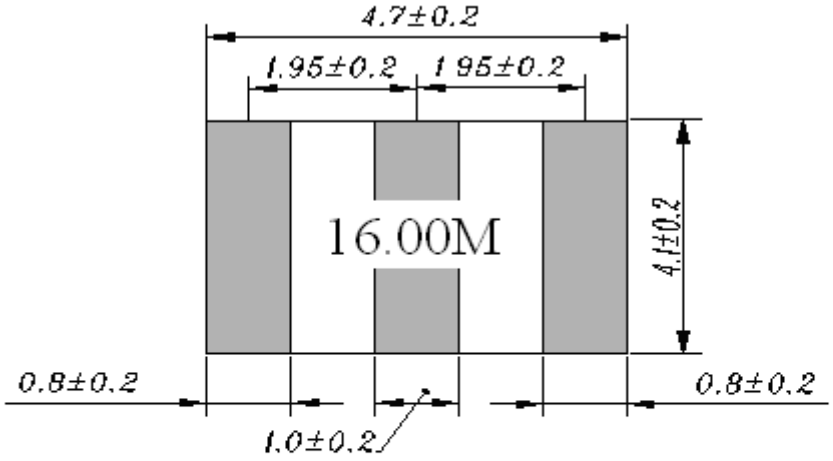

DRAWING 1

4 ELECTRICAL SPECIFICATIONS

TABLE 1

Items	Content	Remark
Oscillation Frequency Fosc（MHz）	16.0	
Frequency Accuracy （%）	±0.5	
Resonant Impedance Ro（Ω） max.	40	
Insulation Resistance Ri,（MΩ）min.	500	（100V，1min）
Temperature Coefficient of Oscillation Frequency （%） max.	±0.3	（Oscillation Frequency drift，-25℃～+85℃）
Rating Voltage UR（V）max.	6V DC	
	15V p-p	
Withstanding Voltage (V)	50	(DC，1min)
Operating Temperature (℃)	-20～+80	
Storage Temperature (℃)	-55～+85	
Aging Rate （%） max.	±0.3	（For Ten Years）

5 TEST

5.1 Test Conditions

Parts shall be tested under a condition (Temperature:+20℃±15℃, Humidity:65%±20%R.H.)unless the standard condition(Temperature:+25℃±3℃,Humidity:65%±5% R.H.) is regulated to test.

5.2 Test Circuit:

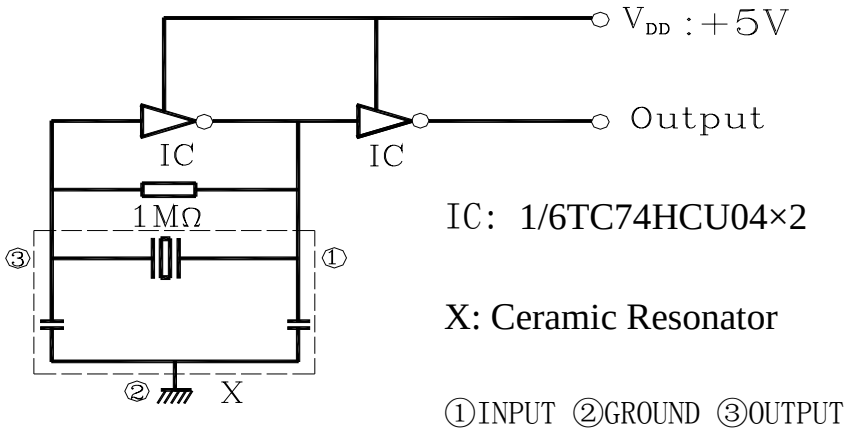

DRAWING 2

6 PHYSICAL AND ENVIRONMENTAL CHARACTERISTICS

TABLE 2

No	Item	Condition of Test	Performance Requirements
2.1	Humidity	Keep the resonator at 40℃ ±2℃ and 90%~95% RH for 96h±4h. Then Release the resonator into the room Condition for 1h prior to the Measurement.	It shall fulfill the specifications in Table 3.
2.2	High Temperature Exposure	Subject the resonator to 85℃±5℃ for 96h, then release the resonator into the room conditions for 1h prior to the measurement.	It shall fulfill the specifications in Table 3.
2.3	Low Temperature Exposure	Subject the resonator to -25℃±5℃ for 96h, then release the resonator into the room conditions for 1h prior to the measurement.	It shall fulfill the specifications in Table 3.
2.4	Temperature Cycling	Subject the resonator to -40℃ for 30 min. followed by a high temperature of 85℃ for 30 min.Cycling shall be repeated 5 times with a transfer time of 15s. At the room temperature for 1h prior to the measurement.	It shall fulfill the specifications in Table 3.
2.5	Vibration	Subject the resonator to vibration for 2h each in x、y and z axis With the amplitude of 1.5mm, the frequency shall be varied uniformly between the limits of 10 Hz~55Hz.	It shall fulfill the specifications in Table 3.
2.6	Mechanical Shock	Drop the resonator randomly onto a wooden floor from the height of 100cm 3 times.	No visible damage and it shall fulfill the specifications in Table 3.
2.7	Resistance to Soldering Heat	Passed through the re-flow oven under the following condition and left at room temperature for 1 hour before measurement. Temperature at the surface of the substrate: Time Preheat 150℃±5℃: 60s±10s Peak 240℃±5℃: 10s±3s	It shall fulfill the specifications in Table 3.
2.8	Solderability	Dipped in 230℃±5℃ solder bath for 3s±0.5s with rosin flux (25wt% ethanol solution.)	The terminals shall be at least 95% covered by

			solder.
2.9	Board Bending	Mount a glass-epoxy board (Width=40mm, thickness=1.6mm),then bend it to 1mm displacement and keep it for 5s. (See the following figure) 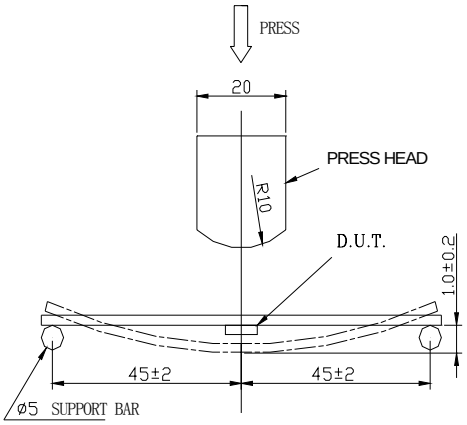	Mechanical damage such as breaks shall not occur.

TABLE 3 SPECIFICATION AFTER TEST ABOUT CHARACTERISTICS

No.	Item	Specification after test
3.1	Oscillation Frequency Change △Fosc/Fosc (%) max	±0.3
3.2	Resonant Impedance Change △Ro(Ω)max	±30
Note ： The limits in the above table are referenced to the initial measurements.		

7 RECOMMENDED LAND PATTERN AND REFLOW SOLDERING

STANDARD CONDITIONS

7.1 Recommended land pattern

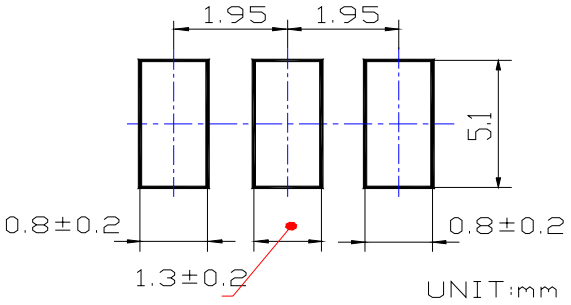

DRAWING 4

7.2 Recommended reflow soldering standard conditions

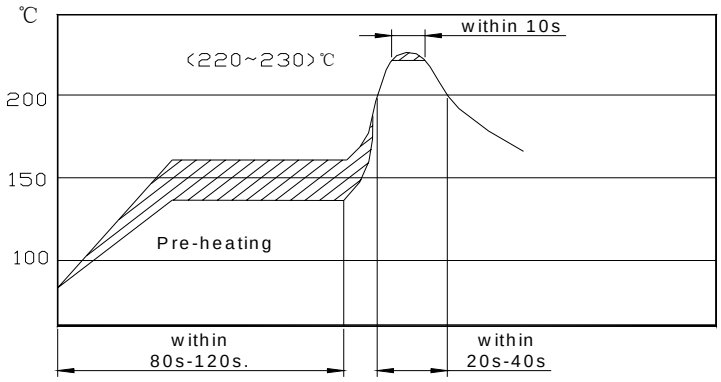

DRAWING 5

8 PACKAGE

To protect the products in storage and transportation，it is necessary to pack them（outer and inner package）.On paper pack, the following requirements are requested.

8.1 Dimensions and Mark

At the end of package, the warning (moisture proof, upward put) should be stick to it.

Dimensions and Mark (see below)

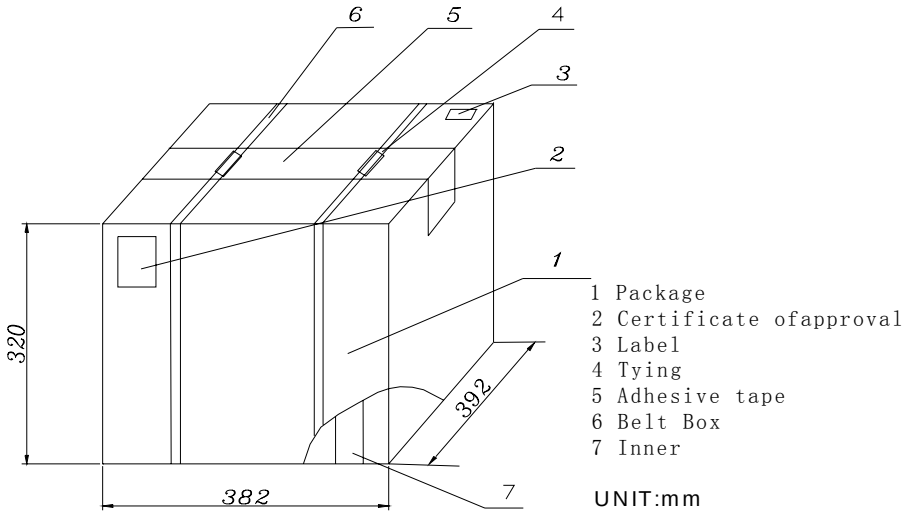

DRAWING 6

8.2 Section of package

Package is made of corrugated paper with thickness of 0.8cm.Package has 12 inner boxes, each box has 5 reels (each reel for plastic bag).

8.3 Quantity of package

Per plastic reel	1000 pieces of piezoelectric ceramic part
Per inner box	5 reels
Per package	12 inner boxes（60000 pieces of piezoelectric ceramic part ）

8.4Reel

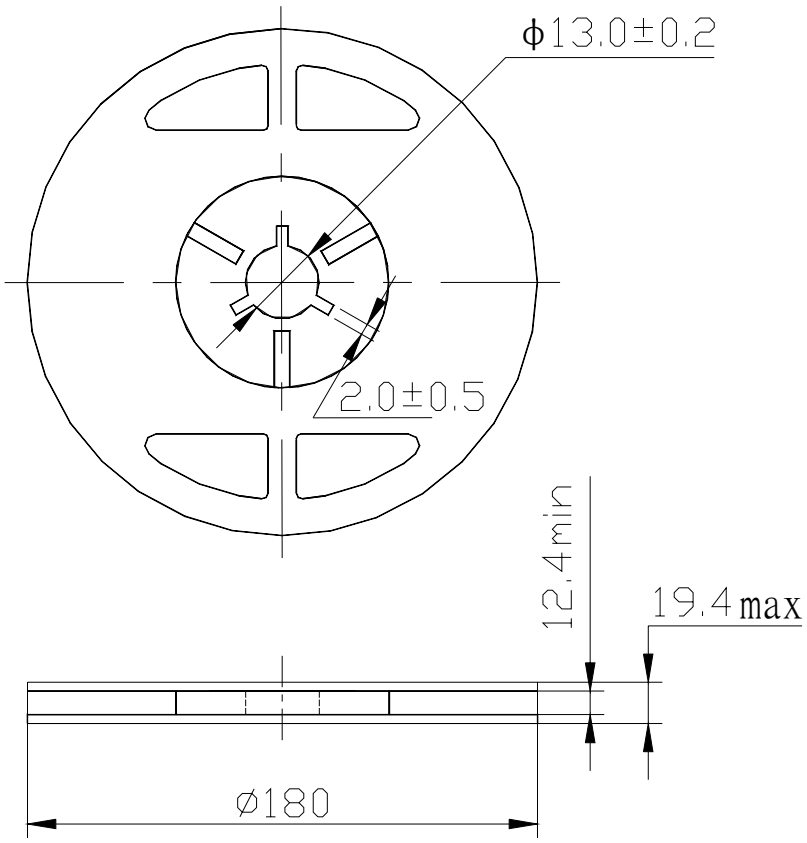

8.5 Packing Method Sketch Map

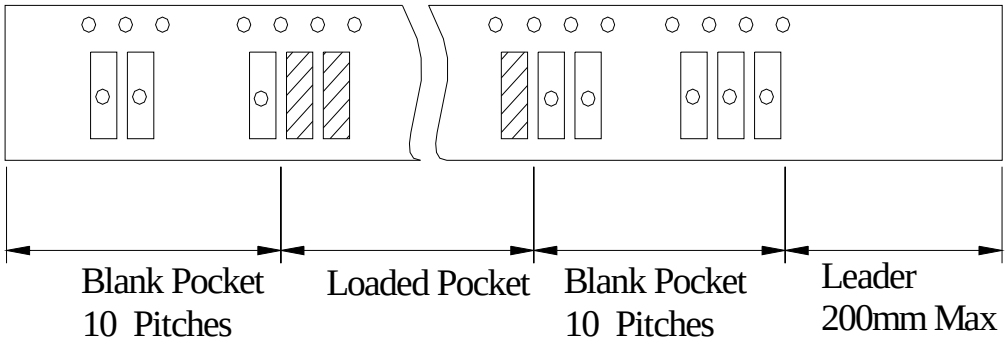

8.6Test Condition Of Peeling Strength

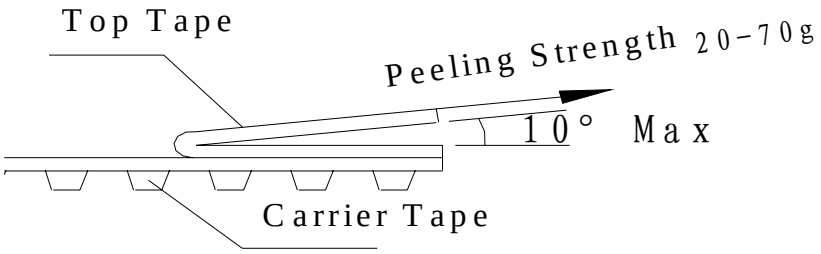

9 OTHERS

9.1 Caution of use

9.1.1 Do not use this product with bend. Please don't apply axcess mechanical stress to the component and terminals at soldering.

9.1.2 The component may be damaged when an excess stress will be applied.

9.1.3 Comformal coating of the component is acceptable,However the resin materials ,curing temperature and other process conditions should be evaluated to conform stable electrical characteristics are maintained.

9.2 Notice

9.2.1 This specification mentions the quality of the component as a single unit. Please insure the component is thoroughly evaluated in your application circuit.

9.2.2 Please return one of this specification after your signature of acceptance.

9.2.3 When something gets doubtful with this specifications, we shall jointly work to get an agreement.