1. SCOPE

This specification shall cover the characteristics of the ceramic resonator with the type ZTT20.0MX.

2. PART NO.:

PART NUMBER	CUSTOMER PART NO	SPECIFICATION NO
ZTT20.0MX		

3. OUTLINE DRAWING AND DIMENSIONS:

3.1 Appearance: No visible damage and dirt.

3.2 Construction: Leads are soldered on electrode and body is molded by resin.

3.3 Dimensions:

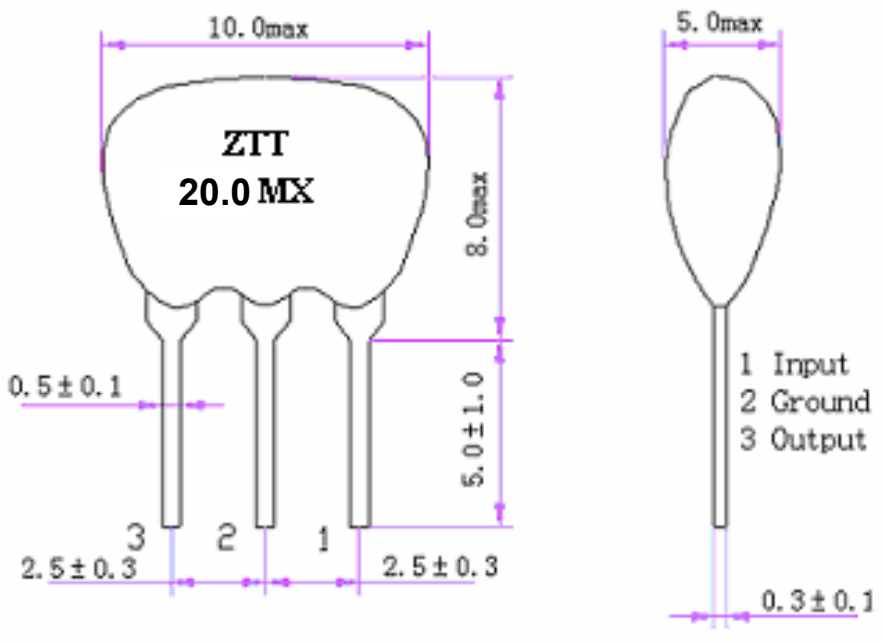

UNIT：mm

4. ELECTRICAL SPECIFICATIONS:

Oscillation Frequency Fosc（MHz）	20.00
Frequency Accuracy （%）	±0.5
Resonant Impedance Ro（Ω）max	40
Temperature Coefficient of Oscillation Frequency （%）max	±0.3 （Oscillation Frequency drift，-25℃～+85℃）
Aging Rate （%）max	±0.5 （For Ten Years）
Rating Voltage UR（V）max	6VDC 15Vp-p
Insulation Resistance Ri,（MΩ）min	100 （100V，1min）
Withstanding Voltage	50VDC，1min

5. MEASUREMENT:

5.1 Measurement Conditions: Parts shall be measured under a condition (Temp.：20±15℃,Humidity ： 65±20% R.H.) unless the standard condition(Temp.：25±3℃,Humidity ： 65±5% R.H.) is regulated to measure.

5.2 Test Circuit:

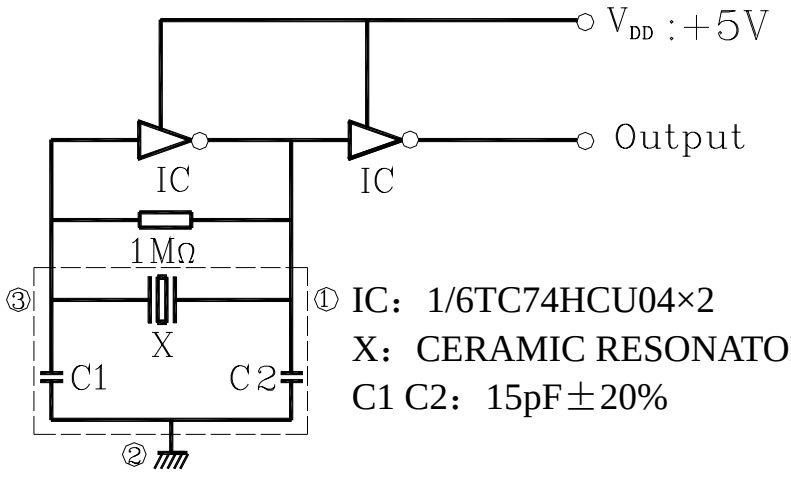

IC：1/6TC74HCU04×2
X：CERAMIC RESONATOR
C1 C2：15pF±20%

6. PHYSICAL AND ENVIRONMENTAL CHARACTERISTICS

No	Item	Condition of Test	Performance Requirements
6.1	Humidity	Subject the resonator at +40 ± 2 ℃ and 90%-95% R.H. for 500 hours, resonator shall be measured after being placed in natural conditions for 1 hour.	It shall fulfill the specifications in Table 1.
6.2	High Temperature Exposure	Subject the resonator to +85±5℃ for 500 hours, resonator shall be measured after being placed in natural conditions for 1 hour.	It shall fulfill the specifications in Table 1.
6.3	Low Temperature Exposure	Subject the resonator to –25±5℃ for 500 hours, resonator shall be measured after being placed in natural conditions for 1 hour.	It shall fulfill the specifications in Table 1.
6.4	Temperature Cycling	Subject the resonator to －25℃ for 30 min. followed by a high temperature of ＋85℃ for 30 min. Cycling shall be repeated 5 times. Resonator shall be measured after being placed in natural conditions for 1 hour.	It shall fulfill the specifications in Table 1.
6.5	Vibration	Subject the resonator to vibration for 2 hours each in x y and z axis with the amplitude of 1.5mm, the frequency shall be varied uniformly between the limits of 10Hz-55Hz and then resonator shall be measured.	It shall fulfill the specifications in Table 1.
6.6	Mechanical Shock	Resonator shall be measured after 3 times' random dropping from the height of 100cm on concrete floor.	No visible damage and it shall fulfill the specifications in Table 1.
6.7	Resistance to Soldering Heat	Lead terminals are immersed up to 2 mm from resonator's body in soldering bath of 260 ± 5 ℃ for 5 ± 1 seconds and then resonator shall be measured after being placed in natural conditions for 1 hour	It shall fulfill the specifications in Table 1.
6.8	Solderability	Lead terminals are immersed up to 2mm from resonator's body in soldering bath of 235±5 ℃ for 2±0.5 sec.	More than 95% of the terminal surface of the resonator shall be covered with fresh solder.

6. PHYSICAL AND ENVIRONMENTAL CHARACTERISTICS

(Continued from the preceding page)

No	Item	Condition of Test	Performance Requirements
6.9 6.9.1 6.9.2	Terminal Strength Terminal Pulling Terminal Bending	Force of 5N is applied to each lead in axial direction for 10±1 sec. When force of 5N is applied to each lead in axial direction,the lead shall folded up 90° from the axial direction and folded back to the axial direction. The speed of folding shall be each 3 seconds.	No visible damage and it shall fulfill the specifications in Table 1.

Table 1

Item	Specification after test
Oscillation Frequency Change Δ fosc/fosc （%）max	±0.3（Refer to the initial value）
Resonant Impedance Ro（Ω）max	30

Note ： The limits in the above table are referenced to the initial measurements.

7. REVIEW OF SPECIFICATIONS

When something gets doubtful with this specifications, we shall jointly work to get an agreement.