ZSSC4132

Automotive Resistive Sensor Signal Conditioner with LIN Interface

Description

The ZSSC4132 is member of the Renesas's family of CMOS integrated circuits for highly accurate amplification and sensor-specific correction of differential bridge sensor signals. Featuring a maximum analog pre-amplification in the range of 150 to 200, the ZSSC4132 is adjustable to nearly all resistive bridges as well as voltage-source sensor types.

Digital compensation of offset, sensitivity, temperature drift, and nonlinearity is accomplished by a 16-bit RISC microcontroller. Calibration coefficients and configuration data are stored in the ZSSC4132 non-volatile memory (NVM), which is reliable in automotive applications.

Measured values are provided via a LIN interface according to the LIN Specification Package 2.2A. The LIN interface enables transmission of sensor data as well as transmission of supplementary data. End-of-line calibration is also supported through this output pin based on the LIN protocol. The ZSSC4132 and the calibration equipment communicate digitally, so the noise sensitivity is greatly reduced. Digital calibration helps keep assembly costs low as no trimming by external devices or lasers is needed.

The ZSSC4132 is optimized for automotive environments by overvoltage and reverse-polarity protection circuitry, excellent electromagnetic compatibility, and multiple diagnostic features.

Typical Applications

- Pressure and temperature sensing for automotive applications
- Main application: HVAC for vehicular environmental comfort

Available Support

- Evaluation Kit
- Application Notes
- Calculation Tools

Features

- Differential bridge sensor input and on-chip or external temperature sensors, selectable for conditioning of sensor input signal and/or temperature output
- Digital compensation of offset, gain, and higher order nonlinearity as well as temperature coefficients of measured bridge sensor input signal
- Operating temperature range -40°C to 150°C
- Accuracy ±0.5% FS at -40°C to 150°C
- NVM memory for configuration and calibration data, and for configurable measurement and conditioning functionality
- LIN interface based on LIN Specification Package 2.2A
- Supports output of one or more sensor signals and product identification via a single LIN interface connection
- Configurable for nearly all resistive bridge sensors
- One-pass end-of-line calibration algorithm minimizes production costs
- No external trimming or components required
- Supply voltage: 7V to 18V
- Protection up to ± 40V (with external diode at VBAT)
- Input span: 1 to 900 mV/V
- Effective ADC resolution: 12 to 14 bit
- Output resolution: defined by user LIN frame specification
  up to signed 16-bit for raw data acquisition
- Package: 24-QFN (4 × 4 mm; wettable flanks)

ZSSC4132 Basic Circuit

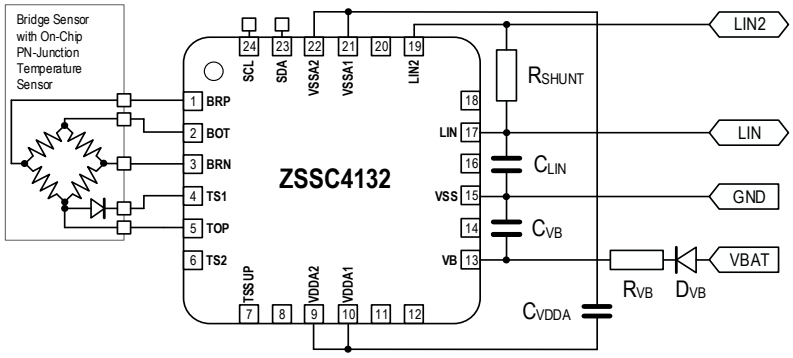

Block Diagram

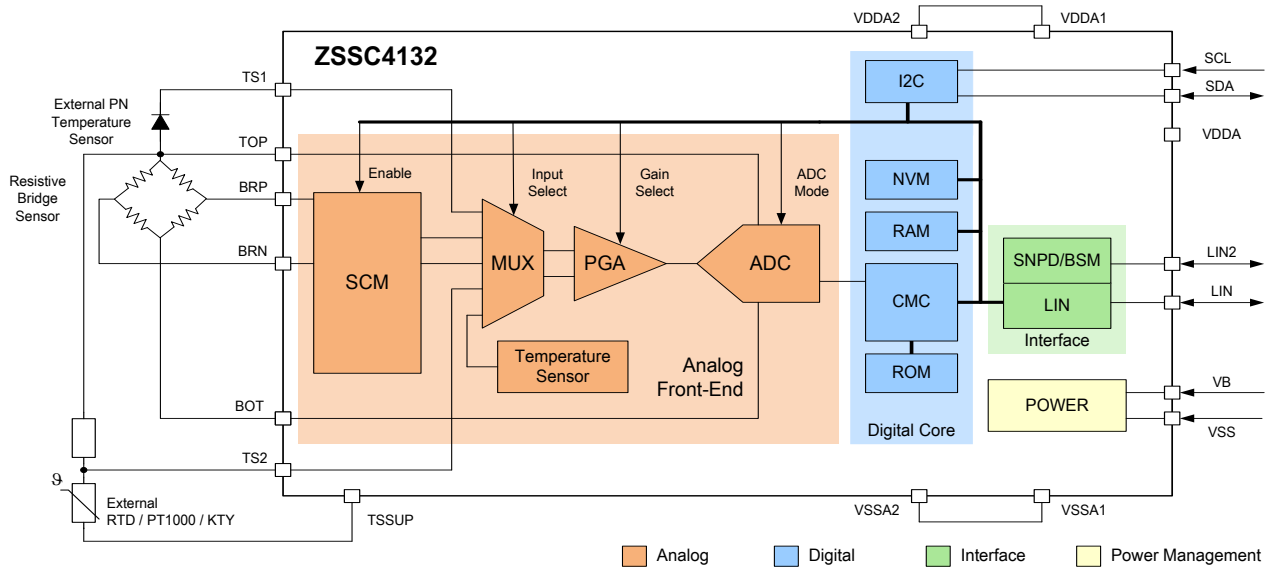

ZSSC4132 Application Example: LIN Pressure and Temperature Sensor

- Module powered directly by 12V board net
- Sensor module with 3-pin connector provides pressure and media temperature signal within LIN frame
- Media temperature signal derived from external RTD
- Temperature compensation via diode on pressure chip
- End-of-line calibration using the one-wire communication via LIN pin
- Slave node position detection based on
  bus shunt method (using LIN2 pin)

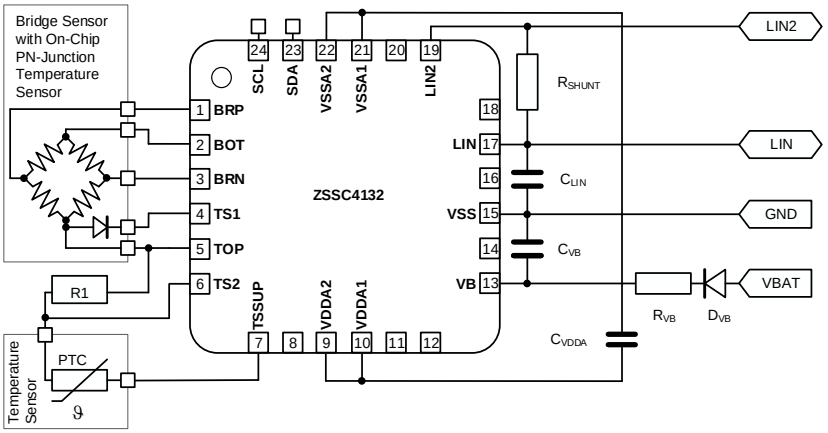

Ordering Information

Note: Contact Renesas for additional options.

Part Number	Description and Package	MSL Rating	Shipping Packaging	Temperature
ZSSC4132CE4R	Single bridge input, LIN output, internal and/or external temperature measurement, 4.0 × 4.0 mm 24-QFN with wettable flanks	MSL1	13” Reel	-40°C to 150°C
ZSSC4132CE4W	Single bridge input, LIN output, internal and/or external temperature measurement, 4.0 × 4.0 mm 24-QFN with wettable flanks	MSL1	7” Reel	-40°C to 150°C
ZSSC4132KIT	ZSSC4132 SSC Evaluation Kit: Communication Board, SSC Board, Sensor Replacement Board, 5 Samples.			

Notice

1. Descriptions of circuits, software and other related information in this document are provided only to illustrate the operation of semiconductor products and application examples. You are fully responsible for the incorporation or any other use of the circuits, software, and information in the design of your product or system. Renesas Electronics disclaims any and all liability for any losses and damages incurred by you or third parties arising from the use of these circuits, software, or information.
2. Renesas Electronics hereby expressly disclaims any warranties against and liability for infringement or any other claims involving patents, copyrights, or other intellectual property rights of third parties, by or arising from the use of Renesas Electronics products or technical information described in this document, including but not limited to, the product data, drawings, charts, programs, algorithms, and application examples.
3. No license, express, implied or otherwise, is granted hereby under any patents, copyrights or other intellectual property rights of Renesas Electronics or others.
4. You shall not alter, modify, copy, or reverse engineer any Renesas Electronics product, whether in whole or in part. Renesas Electronics disclaims any and all liability for any losses or damages incurred by you or third parties arising from such alteration, modification, copying or reverse engineering.
5. Renesas Electronics products are classified according to the following two quality grades: "Standard" and "High Quality". The intended applications for each Renesas Electronics product depends on the product's quality grade, as indicated below.
   "Standard": Computers; office equipment; communications equipment; test and measurement equipment; audio and visual equipment; home electronic appliances; machine tools; personal electronic equipment; industrial robots; etc.
   "High Quality": Transportation equipment (automobiles, trains, ships, etc.); traffic control (traffic lights); large-scale communication equipment; key financial terminal systems; safety control equipment; etc.
   Unless expressly designated as a high reliability product or a product for harsh environments in a Renesas Electronics data sheet or other Renesas Electronics document, Renesas Electronics products are not intended or authorized for use in products or systems that may pose a direct threat to human life or bodily injury (artificial life support devices or systems; surgical implantations; etc.), or may cause serious property damage (space system; undersea repeaters; nuclear power control systems; aircraft control systems; key plant systems; military equipment; etc.). Renesas Electronics disclaims any and all liability for any damages or losses incurred by you or any third parties arising from the use of any Renesas Electronics product that is inconsistent with any Renesas Electronics data sheet, user's manual or other Renesas Electronics document.
6. When using Renesas Electronics products, refer to the latest product information (data sheets, user's manuals, application notes, "General Notes for Handling and Using Semiconductor Devices" in the reliability handbook, etc.), and ensure that usage conditions are within the ranges specified by Renesas Electronics with respect to maximum ratings, operating power supply voltage range, heat dissipation characteristics, installation, etc. Renesas Electronics disclaims any and all liability for any malfunctions, failure or accident arising out of the use of Renesas Electronics products outside of such specified ranges.
7. Although Renesas Electronics endeavors to improve the quality and reliability of Renesas Electronics products, semiconductor products have specific characteristics, such as the occurrence of failure at a certain rate and malfunctions under certain use conditions. Unless designated as a high reliability product or a product for harsh environments in a Renesas Electronics data sheet or other Renesas Electronics document, Renesas Electronics products are not subject to radiation resistance design. You are responsible for implementing safety measures to guard against the possibility of bodily injury, injury or damage caused by fire, and/or danger to the public in the event of a failure or malfunction of Renesas Electronics products, such as safety design for hardware and software, including but not limited to redundancy, fire control and malfunction prevention, appropriate treatment for aging degradation or any other appropriate measures. Because the evaluation of microcomputer software alone is very difficult and impractical, you are responsible for evaluating the safety of the final products or systems manufactured by you.
8. Please contact a Renesas Electronics sales office for details as to environmental matters such as the environmental compatibility of each Renesas Electronics product. You are responsible for carefully and sufficiently investigating applicable laws and regulations that regulate the inclusion or use of controlled substances, including without limitation, the EU RoHS Directive, and using Renesas Electronics products in compliance with all these applicable laws and regulations. Renesas Electronics disclaims any and all liability for damages or losses occurring as a result of your noncompliance with applicable laws and regulations.
9. Renesas Electronics products and technologies shall not be used for or incorporated into any products or systems whose manufacture, use, or sale is prohibited under any applicable domestic or foreign laws or regulations. You shall comply with any applicable export control laws and regulations promulgated and administered by the governments of any countries asserting jurisdiction over the parties or transactions.
10. It is the responsibility of the buyer or distributor of Renesas Electronics products, or any other party who distributes, disposes of, or otherwise sells or transfers the product to a third party, to notify such third party in advance of the contents and conditions set forth in this document.
11. This document shall not be reprinted, reproduced or duplicated in any form, in whole or in part, without prior written consent of Renesas Electronics.
12. Please contact a Renesas Electronics sales office if you have any questions regarding the information contained in this document or Renesas Electronics products.

(Note1) "Renesas Electronics" as used in this document means Renesas Electronics Corporation and also includes its directly or indirectly controlled subsidiaries.
(Note2) "Renesas Electronics product(s)" means any product developed or manufactured by or for Renesas Electronics.

(Rev.4.0-1 November 2017)

Corporate Headquarters

TOYOSU FORESIA, 3-2-24 Toyosu,
Koto-ku, Tokyo 135-0061, Japan
www.renesas.com

Contact Information

For further information on a product, technology, the most up-to-date version of a document, or your nearest sales office, please visit:
www.renesas.com/contact/

Trademarks

Renesas and the Renesas logo are trademarks of Renesas Electronics Corporation. All trademarks and registered trademarks are the property of their respective owners.

© 2020 Renesas Electronics Corporation. All rights reserved.