# SUPPLY VOLTAGE MONITOR

**ISSUE 2- JANUARY 2003**

# ZSH330

## DEVICE DESCRIPTION

The ZSH330 is a three terminal under voltage monitor circuit for use in microprocessor systems. The threshold voltage of the device has been set to 3.1 volts making it ideal for 3.3 volt circuits.

Included in the device is a precise voltage reference and a comparator with built in hysteresis to prevent erratic operation. The ZSH330 features an open collector output capable of sourcing at least I0mA which only requires a single external resistor to interface to following circuits.

Operation of the device is guaranteed from one volt upwards, from this level to the device threshold voltage the output is held high providing a power on reset function. Should the supply voltage, once established, at any time drop below the threshold level then the output again will pull high.

The device is available in a TO92 package for through hole applications as well as SOT223 for surface mount requirements.

## FEATURES

- SOT223 and TO92 packages
- Power on reset generator
- Automatic reset generation
- Low standby current
- Guaranteed operation from 1 volt
- Wide supply voltage range
- Internal clamp diode to discharge delay capacitor
- 3.1 volt threshold for 3.3 volt logic
- 20mV hysteresis prevents erratic operation

## APPLICATIONS

- Microprocessor systems
- Computers
- Computer peripherals
- Instrumentation
- Automotive
- Battery powered equipment

## SCHEMATIC DIAGRAM

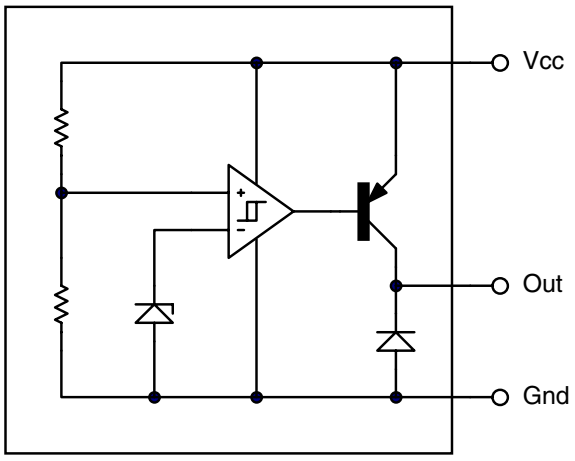

# ZSH330

## ABSOLUTE MAXIMUM RATING

| | | | |
|---|---|---|---|
| Input Supply Voltage | -1 to 10V | **Power Dissipation** | |
| Offstate Output Voltage | 10V | TO92 | 780mW |
| Onstate Output Source Current(Note 1) | Internally limited | SOT223 | 2W(Note 2) |
| Clamp Diode Forward Current(Note 1) | 100mA | | |
| Operating Junction Temperature | 150°C | | |
| Operating Temperature | -40 to 85°C | | |
| Storage Temperature | -55 to 150°C | | |

## TEST CONDITIONS

**($T_{amb}$=25°C for typical values, $T_{amb}$=-40 to 85°C for min/max values (Note3))**

## COMPARATOR

| PARAMETER | SYMBOL | MIN | TYP. | MAX. | UNITS |
|---|---|---|---|---|---|
| Threshold Voltage Low state output ($V_{cc}$ increasing) | $V_{IL}$ | 3.01 | 3.09 | 3.15 | V |
| Threshold Voltage High state output ($V_{cc}$ decreasing) | $V_{IH}$ | 3.01 | 3.07 | 3.15 | V |
| Hysteresis | $V_H$ | 0.01 | 0.02 | 0.05 | V |

## OUPUT

| PARAMETER | SYMBOL | MIN | TYP. | MAX. | UNITS |
|---|---|---|---|---|---|
| Output source saturation: | $V_{OH}$ | | | | |
| ($V_{cc}$=2.7V, $I_{source}$=8.0mA) | | | | $V_{CC}$-1.3 | V |
| ($V_{cc}$=2.7V, $I_{source}$=2.0mA) | | | | $V_{CC}$-1.2 | V |
| ($V_{cc}$=1.0V, $I_{source}$=2μA) | | | | $V_{CC}$-0.4 | V |
| Onstate output source current ($V_{cc}$=2.7V, Output=0V) | $I_{source}$ | 10 | 21 | 50 | mA |
| Offstate output leakage current ($V_{cc}$=3.3V, Output=0V) | $I_{oh}$ | | 0.02 | 0.5 | μA |
| Clamp diode forward voltage ($I_f$=10mA) | $V_f$ | 0.6 | 1.2 | 1.5 | V |
| Propagation delay ($V_{in}$ 3.3V to 2.7V, $R_l$=10k, $T_{amb}$=25°C) | $T_d$ | | 1.4 | | μs |

## TOTAL DEVICE

| PARAMETER | SYMBOL | MIN | TYP. | MAX. | UNITS |
|---|---|---|---|---|---|
| Operating input voltage range | $V_{cc}$ | 1.0 to 6.5 | | | V |
| Quiescent input current ($V_{cc}$=3.3V) | $I_q$ | | 130 | 180 | μA |

**Note:**
1. Maximum package power dissipation must be observed.
2. Maximum power dissipation for the SOT223 package is calculated assuming that the device is mounted on a PCB measuring 2 inches square.
3. Low duty cycle pulse techniques are used during test to maintain junction temperatures as close to ambient as possible.

## TYPICAL CHARACTERISTICS

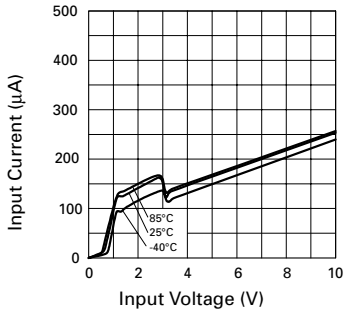


**Input Current v Input Voltage**

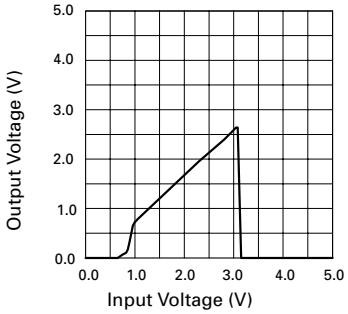


**Output Voltage v Input Voltage**

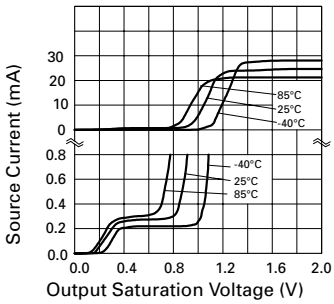


**Output Saturation Voltage v Source Current**

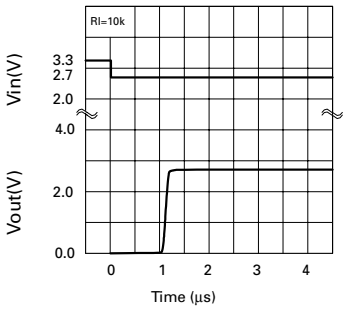


**Reset Delay Time**

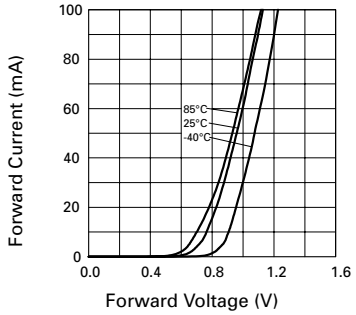


**Clamp Diode Forward Current v Voltage**

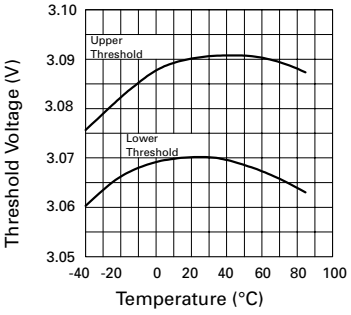


**Threshold Voltage v Temperature**

# ZSH330

## TIMING DIAGRAM

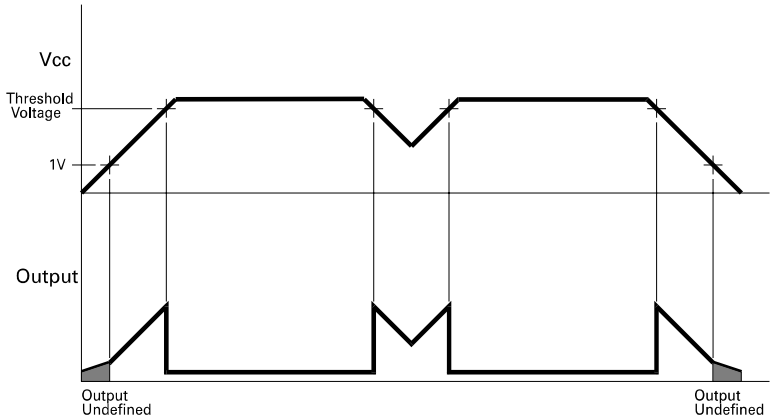


## APPLICATION CIRCUIT

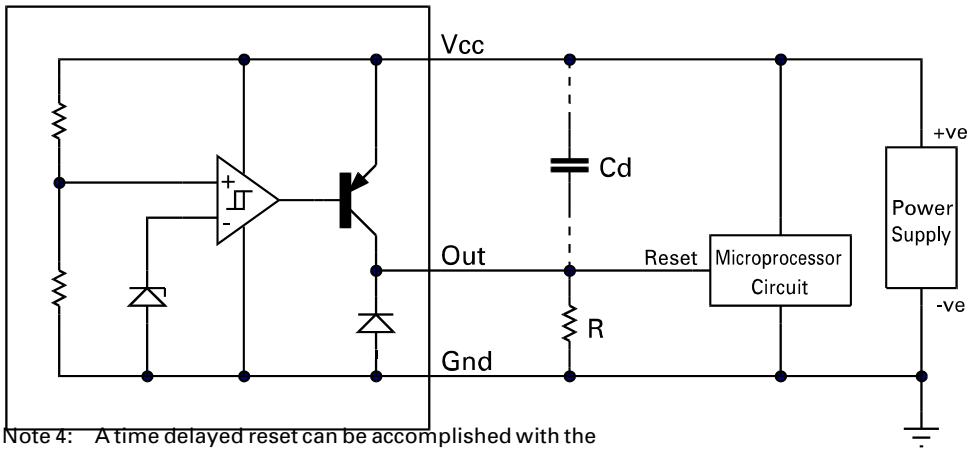


Note 4: A time delayed reset can be accomplished with the additional Cd.

$$T_{DY} = RCd \left[ \ln \left( \frac{1}{\frac{V_{TH}}{V_{in}}} \right) - \ln \left( \frac{1}{1 - \frac{V_{SAT}}{V_{in}}} \right) \right]$$

$T_{DY}$ =Time (Seconds)
$V_{TH}$ =Microprocessor Reset Threshold (ground referenced)
$V_{SAT}$ =Output Saturation Voltage ( from Output Saturation Voltage characteristic)
$V_{in}$ =Power Supply Voltage

# ZSH330

## CONNECTION DIAGRAMS

**SOT223 Package Suffix – G**

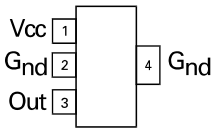


*Top View –*
*Connect pin 4 to pin 2* or leave pin 4 electrically isolated

**TO92 Package Suffix – C**

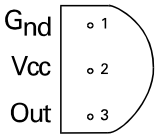


*Bottom View*

## ORDERING INFORMATION

| Part No | Package | Partmark |
|---|---|---|
| ZSH330C | TO92 | ZSH330 |
| ZSH330G | SOT223 | ZSH330 |