Brief Description

The ZLED7012, one of our ZLED family of LED control ICs, is a low-noise, constant-frequency charge pump DC/DC converter that can drive up to four LED channels, providing a programmable constant current level ranging from 1.8mA to 20mA per LED channel. It can also drive higher current LEDs because its current sinks can operate in parallel. It enables white or other color LED applications that require uniform intensity and/or linear progressions in brightness. Capable of operating efficiently with DC voltage supplies ranging from 2.8V to 5.5V, it is ideal for small, battery-powered applications because very few external components are needed: typically one small-dimension 1µF capacitor across the C+ and C- pins and two small-dimension 2.2µF capacitors to GND from the VCC and Vout pins.

The ZLED7012's Pulse Count Control (PCC) serial digital input is used to enable/disable the LEDs and set the current level (14 settings using a nearly logarithmic scale to provide a linear brightness progression). This simple, high-speed interface allows efficient real-time management of LEDs via microcontrollers or control systems.

The ZLED7012's features include integrated soft-start circuitry to protect against excessive in-rush current during power-on and a low-current shutdown mode that reduces quiescent current consumption to approximately 1µA (typical) by disconnecting the load from the input when the EN/SET pin is low for a specified time.

Features

- Low quiescent current in low-current shutdown mode: 1µA typical; <2µA maximum
- Integrated thermal shutdown protection prevents damage by shutting down the ZLED7012 if the die junction temperature exceeds 160°C (typical)
- Fixed charge pump switching frequency: 1MHz (typ.)
- Soft-start feature protects against excessive inrush current during power-on

Benefits

- Current matching accuracy: ±0.9% (typical)
- One-pin on/off or brightness control for up to four LEDs via a simple PCC serial interface—no pulse-width modulation or additional control circuit needed
- 14 programmable current levels for achieving real-time control of effects such as LED fade-out or sudden changes in brightness
- Low EMI and back-injected noise because the charge pump is not inductor-based
- Very few external components needed for operation
- Flexible design enables diverse LED applications: up to 20mA per channel
- LED driver family concept with low-voltage six-channel LED driver ZLED7022

Available Support

- Evaluation Kit

Physical Characteristics

- Voltage supply: 2.8V to 5.5V DC
- Operating temperature: -40°C to 85°C
- Small footprint 12-pin UTQFN package (2mm×2mm)

ZLED7012 Application Circuit

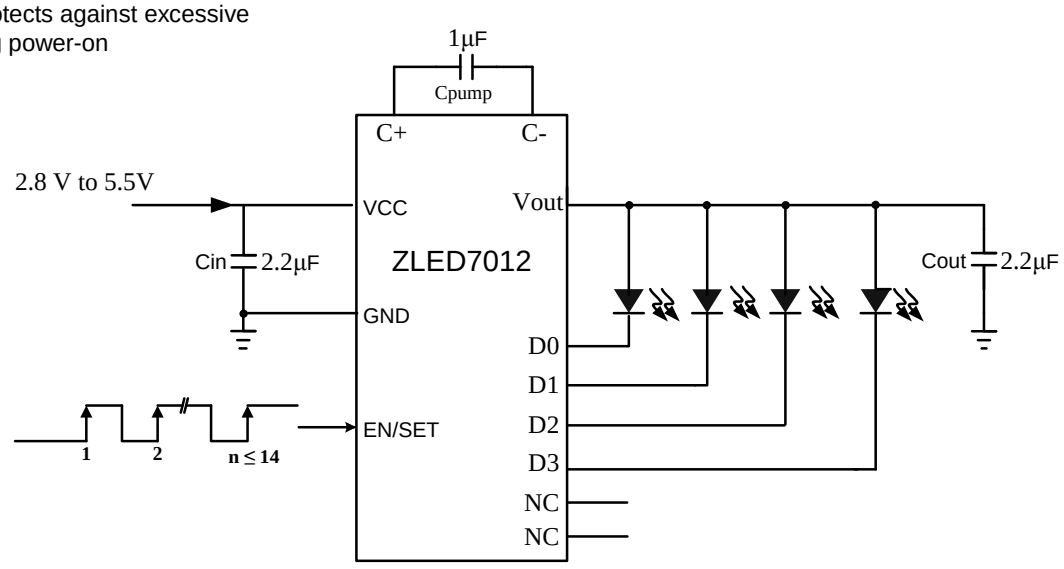

Block Diagram

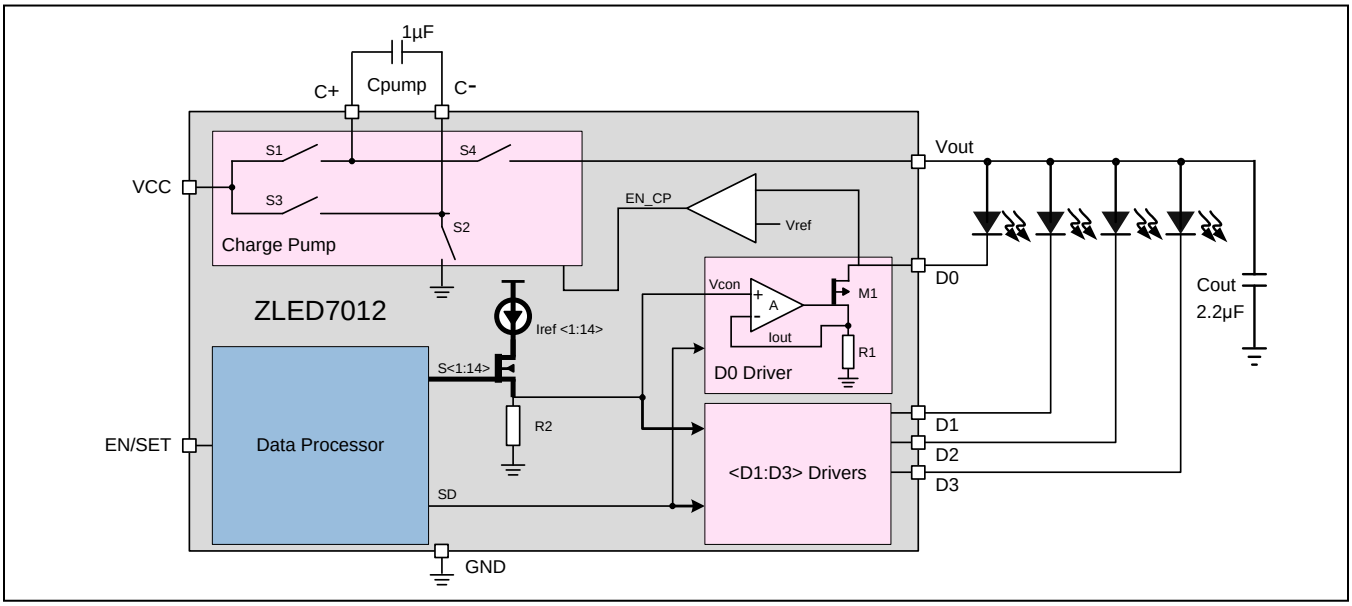

Typical Applications

- *LED backlighting for portable devices*
- *LED lighting for cell phones, smartphones. PDAs*
- *Illumination of digital photo frames*
- *Backlighting for GPS / navigation systems*
- *Low voltage LED lighting fixtures*
- *General purpose low-voltage industrial and consumer applications*

Ordering Information

Product Sales Code	Description	Package
ZLED7012ZI1R	ZLED7012 – Low-Voltage Four-Channel LED Driver	UTQFN12 (2x2)mm Tape & Reel
ZLED7012KIT-E1	ZLED7012 Evaluation Board	Kit

Corporate Headquarters
6024 Silver Creek Valley Road
San Jose, CA 95138
www.IDT.com

Sales
1-800-345-7015 or 408-284-8200
Fax: 408-284-2775
www.IDT.com/go/sales

Tech Support
www.IDT.com/go/support

DISCLAIMER Integrated Device Technology, Inc. (IDT) reserves the right to modify the products and/or specifications described herein at any time, without notice, at IDT's sole discretion. Performance specifications and operating parameters of the described products are determined in an independent state and are not guaranteed to perform the same way when installed in customer products. The information contained herein is provided without representation or warranty of any kind, whether express or implied, including, but not limited to, the suitability of IDT's products for any particular purpose, an implied warranty of merchantability, or non-infringement of the intellectual property rights of others. This document is presented only as a guide and does not convey any license under intellectual property rights of IDT or any third parties.

IDT's products are not intended for use in applications involving extreme environmental conditions or in life support systems or similar devices where the failure or malfunction of an IDT product can be reasonably expected to significantly affect the health or safety of users. Anyone using an IDT product in such a manner does so at their own risk, absent an express, written agreement by IDT.

Integrated Device Technology, IDT and the IDT logo are trademarks or registered trademarks of IDT and its subsidiaries in the United States and other countries. Other trademarks used herein are the property of IDT or their respective third party owners. For datasheet type definitions and a glossary of common terms, visit www.idt.com/go/glossary. All contents of this document are copyright of Integrated Device Technology, Inc. All rights reserved.

Contents

1 IC Characteristics 5
1.1. Absolute Maximum Ratings 5
1.2. Operating Conditions 5
1.3. Electrical Parameters 5
1.4. Typical Performance Graphs 6
2 Circuit Description 8
2.1. Block Diagram 8
2.2. ZLED7012 Overview 8
2.3. ZLED7012 Soft-Start Feature 9
2.4. ZLED7012 Low-Current Shutdown Mode 9
2.5. LED Current Control 9
2.6. PCC Serial Digital Interface 10
3 Operating Conditions 10
3.1. RF Noise Reduction 10
3.2. ZLED7012 Thermal Protection 10
4 Application Circuit Design 11
4.1. Applications 11
4.2. External Components 11
4.2.1. External Capacitors Cout and Cin 11
4.2.2. External Pump Capacitor 11
4.2.3. LEDs 12
4.3. Unused LED Driver Pins 12
5 ESD Protection 12
6 Pin Configuration and Package 12
7 Ordering Information 14
8 Glossary 14
9 Document Revision History 14

© 2016 Integrated Device Technology, Inc.

List of Figures

Figure 1.1 Operating Current I_{CC} over Supply Voltage V_{CC} Range (2.8V to 5.5V) at 25°C 6
Figure 1.2 LED Current over Supply Voltage V_{CC} Range (2.8V to 5.5V) for Outputs D0:D3 (LED0:LED3) 7
Figure 1.3 Shutdown Current I_{SD} over Supply Voltage V_{CC} Range (2.8V to 5.5V) 7
Figure 1.4 Current I_{CC} over Temperature Range (-40°C to +85°C) 7
Figure 1.5 Efficiency (%) over the V_{CC} Range (2.8V to 5.5V) at 25°C 8
Figure 2.1 PCC Serial Digital Interface Signal Timing 10
Figure 4.1 Basic Application Circuit using D2:D0 11
Figure 6.1 Pin Configuration ZLED7012 – Top View 12
Figure 6.2 UTQFN-12 Package Drawing 13

List of Tables

Table 2.1 Current Output Settings 9
Table 6.1 Layout Requirements and Pin Descriptions—12-pin UTQFN Package 13
Table 6.2 UTQFN-12 Package Dimensions 13

1 IC Characteristics

1.1. Absolute Maximum Ratings

No.	PARAMETER	SYMBOL	CONDITIONS	MIN	TYP	MAX	UNIT
1.1.1	Input voltage referenced to ground	V_{CC}		-0.3		6.0	V
1.1.2	EN/SET voltage referenced to ground	$V_{EN/SET}$		-0.3		V_{CC}+0.3	V
1.1.3	Maximum soldering temperature	T_{LEAD}	At ZLED7012 lead; 10 seconds maximum			300	°C
1.1.4	Maximum Thermal Resistance	θ_{JA}	UTQFN-12 package			60	°C/W
1.1.5	Junction temperature	T_J		-40		150	°C

1.2. Operating Conditions

No.	PARAMETER	SYMBOL	CONDITIONS	MIN	TYP	MAX	UNIT
1.2.1	Operating temperature	T_{amb}		-40		+85	°C
1.2.2	Input voltage	V_{CC}		2.8		5.5	V

1.3. Electrical Parameters

Except as noted, conditions for the following specifications are T_{amb} = -40°C to +85°C (25°C typical); V_{CC} = 2.8V to 5.5V; Cin = Cout = 2.2µF; Cpump = 1µF

Production testing is at 25°C. At other temperatures within the specified operating range, functional operation of the ZLED7012 and specified parameters are guaranteed by characterization, design, and process control.

Parameters marked with an asterisk (*) are guaranteed by design.

No.	PARAMETER	SYMBOL	CONDITIONS	MIN	TYP	MAX	UNIT
Input Power Supply							
1.3.1	Operating current	I_{CC}	$2.8 \le V_{CC} \le 5.5$; I_{SET} = 20mA; No Load		0.6	1.0	mA
1.3.2	Current consumption in shutdown mode	I_{SHDN}	$V_{EN/SET}$ = 0V		1.0	2.0	µA
1.3.3	Current matching between channels	$I_{D-Match}$	I_{SET} = 20mA		±0.9		%
Charge Pump							
1.3.4	Charge pump frequency *	f_{CP}			1.0		MHz
1.3.5	Soft-start time *	T_{SS}			33.0		µs

No.	PARAMETER	SYMBOL	CONDITIONS	MIN	TYP	MAX	UNIT
EN/SET Input (PCC Serial Digital Interface)							
1.3.6	Enable threshold low	V_{EN_L}	V_{CC} = 2.8V			0.4	V
1.3.7	Enable threshold high	V_{EN_H}	V_{CC} = 5.5V	1.4			V
1.3.8	EN/SET low time	T_{EN/SET_LO}		0.3		75	µs
1.3.9	Minimum EN/SET high time	T_{EN/SET_HI_MIN}		50			ns
1.3.10	Maximum EN/SET high time	T_{EN/SET_HI_MAX}				75	µs
1.3.11	EN/SET off timeout *	T_{OFF}		500			µs
1.3.12	EN/SET latch timeout *	T_{LAT}		500			µs
1.3.13	Internal EN/SET pull-down resistor	R_{EN/SET_DOWN}			500		kΩ

1.4. Typical Performance Graphs

Figure 1.1 Operating Current I_{CC} over Supply Voltage V_{CC} Range (2.8V to 5.5V) at 25°C

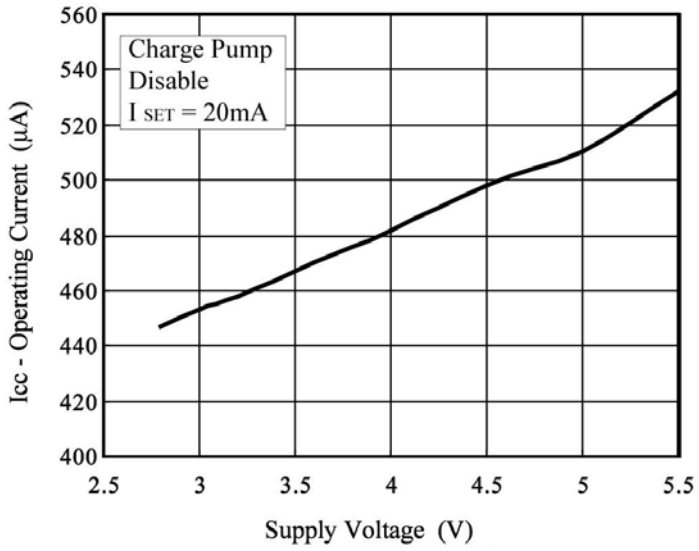

Figure 1.2 LED Current over Supply Voltage V_{CC} Range (2.8V to 5.5V) for Outputs D0:D3 (LED0:LED3)

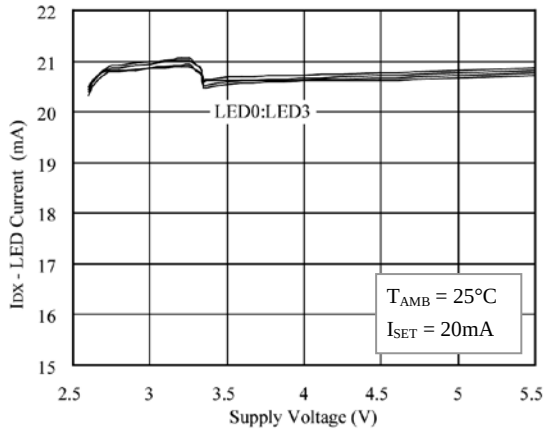

Figure 1.3 Shutdown Current I_{SD} over Supply Voltage V_{CC} Range (2.8V to 5.5V)

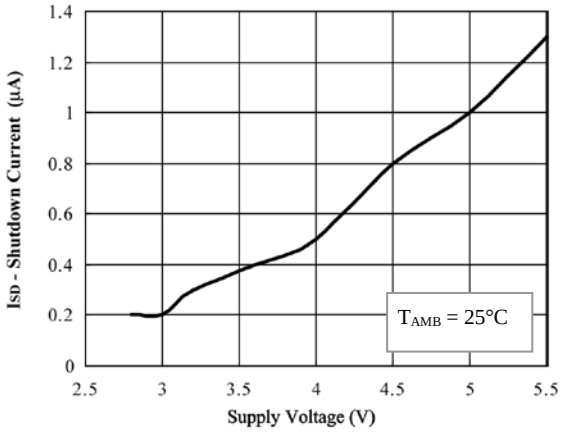

Figure 1.4 Current I_{CC} over Temperature Range (-40°C to +85°C)

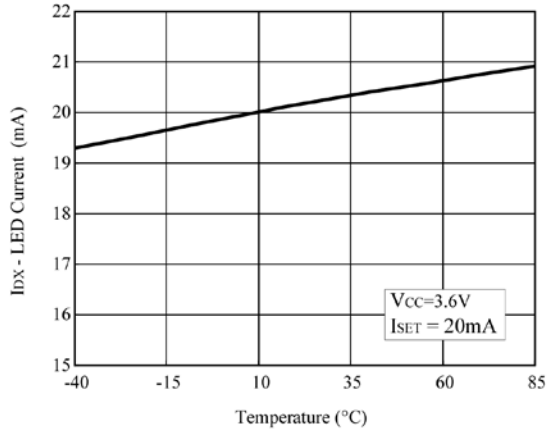

Figure 1.5 Efficiency (%) over the V_{CC} Range (2.8V to 5.5V) at 25°C

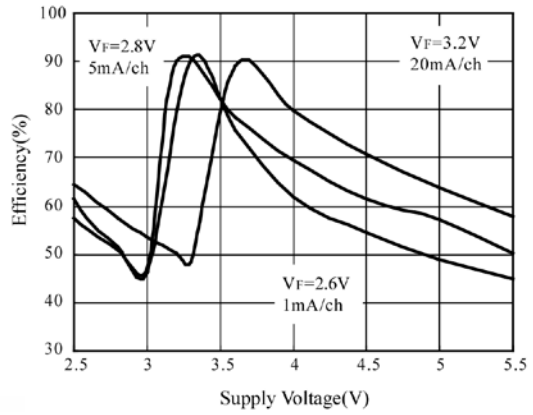

2 Circuit Description

2.1. Block Diagram

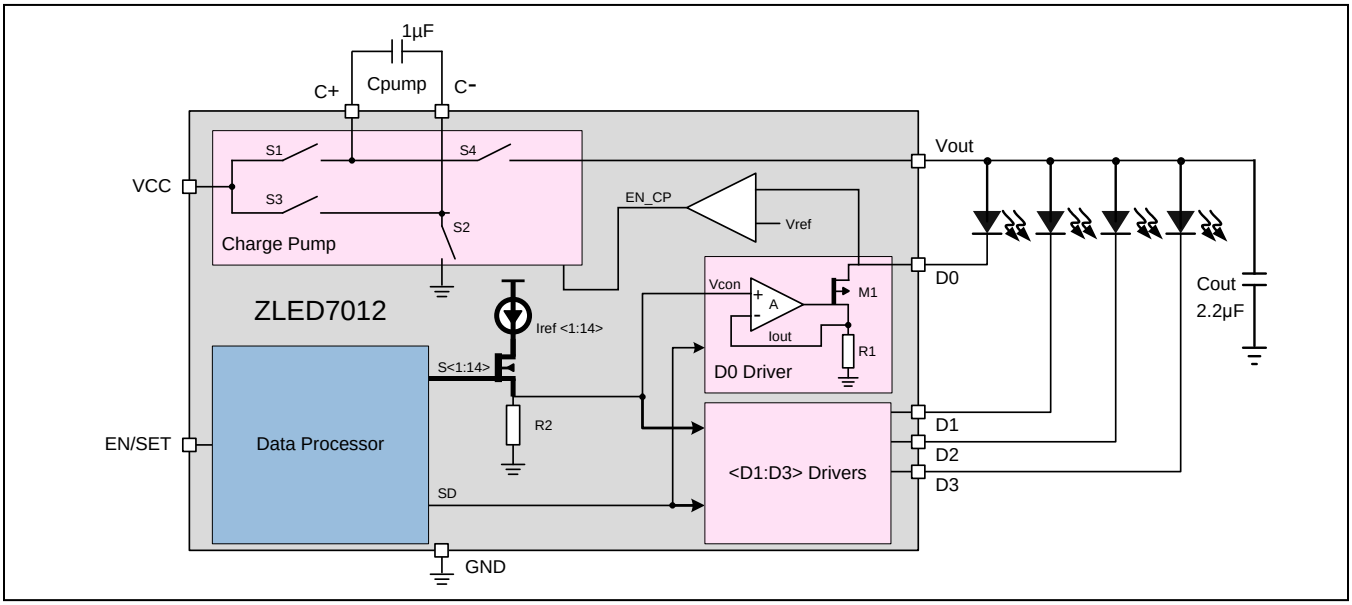

2.2. ZLED7012 Overview

The ZLED7012 is a low-noise, constant-frequency charge pump DC/DC converter for driving up to four LEDs with constant current at a level controlled via a PCC serial digital interface, providing a uniform and linear brightness progression. Its 20mA (maximum) current output per LED channel is optimal for low-voltage or battery-powered applications, such as portable applications powered by 1-cell lithium batteries. The ZLED7012's current sinks can operate in parallel for driving higher current LEDs. Only a few, small external components are needed for typical applications. The ZLED7012's charge pump operates at a fixed frequency (1MHz typical) with minimal noise and harmonics.

The current sinks [D3:D0] are controlled by the PCC serial data input on the EN/SET pin. Data is written to an internal data register that sets the outputs to one of 14 current levels. The Vout pin provides a shared supply voltage for the LEDs. The capacitor across the C+ and C- pins is the “pump capacitor” used by the charge pump.

2.3. ZLED7012 Soft-Start Feature

The soft-start feature protects against excessive inrush currents during the start-up of the charge pump circuit. This prevents potential transient noise effects that can affect initial performance, especially in battery-operated applications toward the end of the battery life.

2.4. ZLED7012 Low-Current Shutdown Mode

The ZLED7012 enters a low-current shutdown mode whenever its EN/SET input is held low longer than T_{OFF} (500µs minimum). In the low-current shutdown mode, the ZLED7012 draws minimal current (I_{SHDN}=1µA typical, 2µA maximum) and the internal data register that controls output current is reset to 0, which disables the outputs.

2.5. LED Current Control

The ZLED7012’s Pulse Count Control (PCC) serial digital interface is used to enable/disable the LED outputs and set the constant current level to one of 14 settings using a nearly logarithmic scale (approximately 1.5dB difference between settings) to provide a linear brightness progression as the current level increases/decreases. See Table 2.1 for the current level settings.

Because [D3:D0] are independent constant current sinks, the voltage at the LED output being driven is determined by the LED’s forward voltage (V_F). This enables accurate LED brightness control and matching by the control system.

Table 2.1 Current Output Settings

Data Level	Current Output per Channel (mA)
1	20.0
2	17.0
3	14.0
4	12.0
5	10.0
6	8.6
7	7.0
8	6.0
9	5.0
10	4.2
11	3.6
12	3.0
13	2.4
14	1.8

© 2016 Integrated Device Technology, Inc.

2.6. PCC Serial Digital Interface

The ZLED7012 detects the rising edges of the control signal input on the EN/SET pin via an internal counter and decodes the signal into one of the 14 current level settings given in Table 2.1. The control signal timing can vary (even during a programming cycle), and its frequency can range from high data rates (e.g., 1MHz) to very low rates (e.g., 15kHz). (Also see section 2.4.) After sending the constant current level code data, the control system holds the EN/SET signal high for time T_{LAT} (500µs minimum) so that the ZLED7012 latches the programmed current level code into the data register and the current level becomes active as illustrated in Figure 2.1. The internal counter is then reset to zero to be ready for the next programming cycle. This process is repeated for the next data sent by the control system for subsequent current level programming. See section 2.4 regarding the low-current shutdown mode, which is entered when the EN/SET signal remains low for longer than T_{OFF} (500µs minimum).

Figure 2.1 PCC Serial Digital Interface Signal Timing

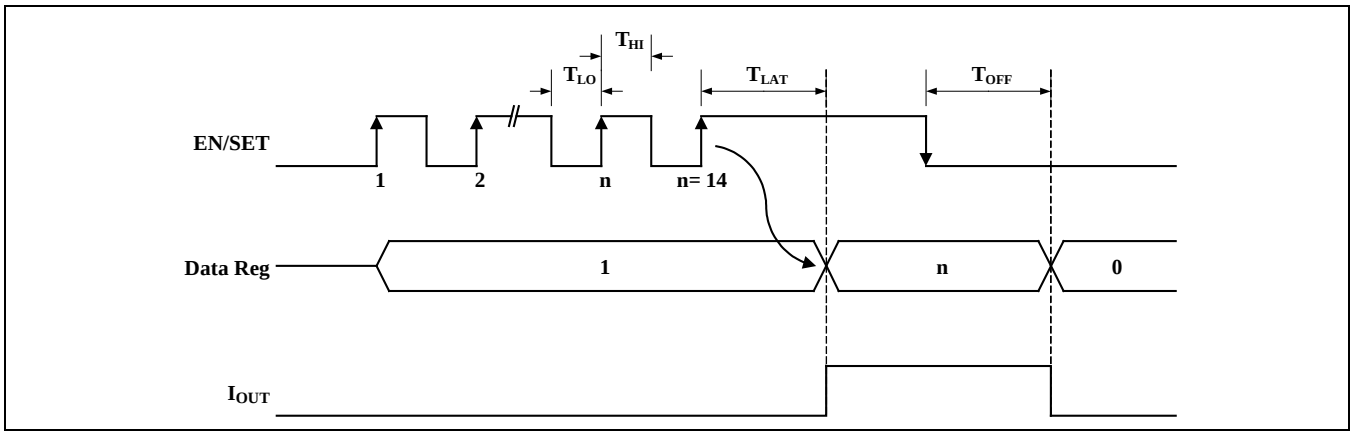

3 Operating Conditions

3.1. RF Noise Reduction

The ZLED7012 charge pump operates at a fixed frequency of 1MHz (typical) to limit noise and harmonics and prevent generation of RF interference by the ZLED7012, which could affect operation of local communication devices, such as cell phones. The soft-start feature also prevents noise transients caused by inrush currents due to charge pump start-up.

The ZLED7012 has significantly lower back-injected noise at the input pin of the charge pump (typically 60mV peak-to-peak), compared to inductor-based DC/DC boost converter solutions for white LED backlight applications (typically 10 times higher).

3.2. ZLED7012 Thermal Protection

The ZLED7012 includes an on-board temperature sensing circuit that shuts down the ZLED7012 and turns off its outputs if the die junction temperature exceeds 160°C (typical).

4 Application Circuit Design

4.1. Applications

The ZLED7012 is designed for white or other color LED applications requiring a controlled LED current that is generated from a varying input voltage. Typical applications include main/sub LCD display backlighting, cell phones (including smartphones), personal digital assistants (PDAs), MP3/MP4 devices, portable media players (PMPs), and general purpose low-voltage industrial applications. See section 4.2.3 for details and requirements for the LEDs.

Figure 4.1 Basic Application Circuit using D2:D0

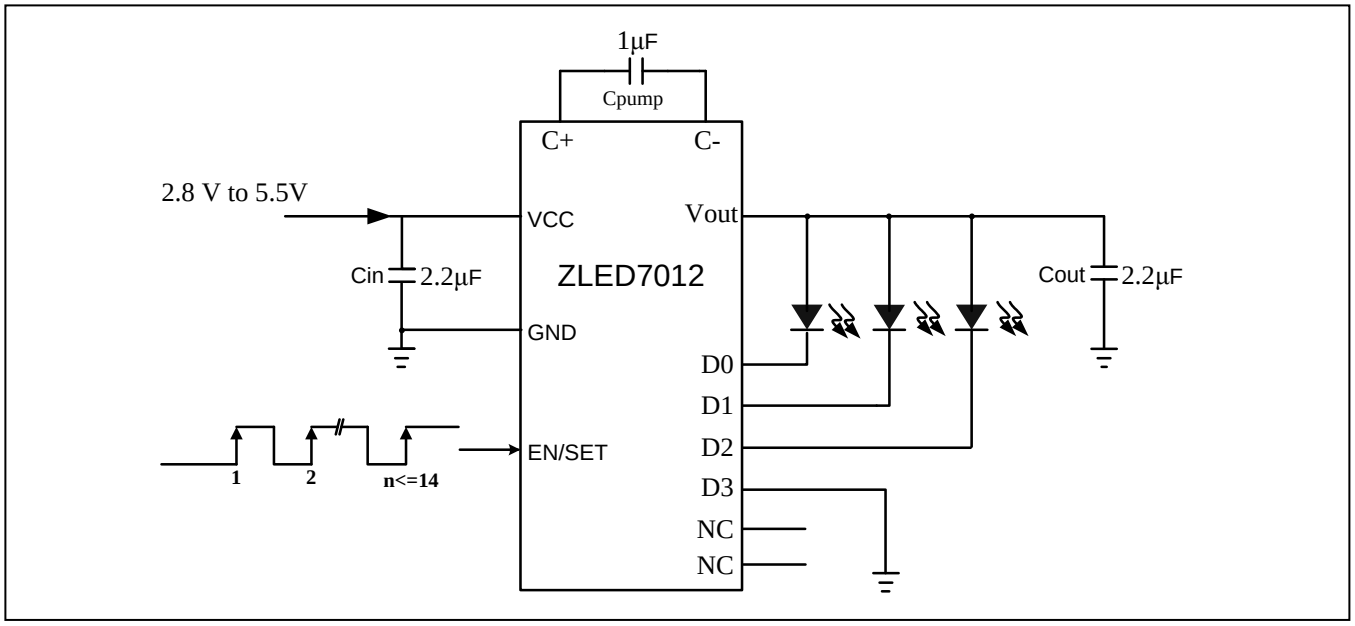

4.2. External Components

4.2.1. External Capacitors Cout and Cin

The values and type of capacitors used for Cin and Cout can affect several circuit parameters including transient performance, turn-on time, and output ripple. Use low equivalent series resistance (ESR) ceramic capacitors (internal resistance < 100mΩ) for best performance, lower costs, and component size reduction. Low ESR capacitors can enable applications at the highest LED forward voltage with the lowest supply voltage. Tantalum and aluminum electrolytic are not generally recommended because the ESR is typically in the range of several ohms.

Note: The recommended starting value when determining the optimal value for Cout is 2.2µF. There is often a design trade-off between low ESR ratings and smaller size because physically larger ceramic capacitors usually have a relatively lower ESR, which can improve the operating range of the circuit.

Cin is a bypass capacitor (≥ 2.2µF) essential to proper operation because it must deliver the dynamic current for the charge pump.

4.2.2. External Pump Capacitor

The external pump capacitor Cpump connected between the C+ and C- pins is an essential part of the ZLED7012's internal charge pump circuit. Because the ZLED7012 operates at a constant charge-pump frequency of 1MHz (typical), it is important that the pump capacitance is greater than 0.47µF so it can transfer enough charge each cycle to supply sufficient load current. To reduce voltage fluctuations on the supply line, do not use a value for the pump capacitor that is greater than the bypass capacitor, Cin.

Select a pump capacitor value in the range of 0.47µF to 2.2µF depending on output current requirements; 1µF is recommended for most applications. When designing the circuit to operate at high levels of output current, choose a higher value of capacitance; low output currents do not require a large pump capacitor. As with Cin and Cout, low ESR ceramic capacitors are recommended for the pump capacitor. See section 4.2.1 for a discussion of low ESR capacitors.

4.2.3. LEDs

The ZLED7012's low dropout current sinks are capable of driving most types of LEDs with forward voltages as high as 4.7V at full current with a Vcc input supply of 2.8V to 5.5V. High-current LEDs can be driven by using any of the D3:D0 pins in parallel.

The brightness of the LEDs being driven will match despite any variations in the forward voltage (V_F) of the individual LEDs because the [D3:D0] output current sinks are matched with negligible voltage dependence (see section 1.3 for specifications).

4.3. Unused LED Driver Pins

LED driver pin D0 must always be used. If any of the LED driver pins [D1:D3] are unused, disable the pin(s) by connecting them to ground to avoid noise coupling.

5 ESD Protection

From each I/O or VCC pin to GND, there is an ESD protection of ≥±3000V. Between the I/O pins, there is an ESD protection of ≥±1000V according the Human Body Model (HBM). The ESD test follows the Human Body Model with 1.5 kΩ/100 pF based on MIL 883-G, Method 3015.7.

6 Pin Configuration and Package

Figure 6.1 Pin Configuration ZLED7012 – Top View

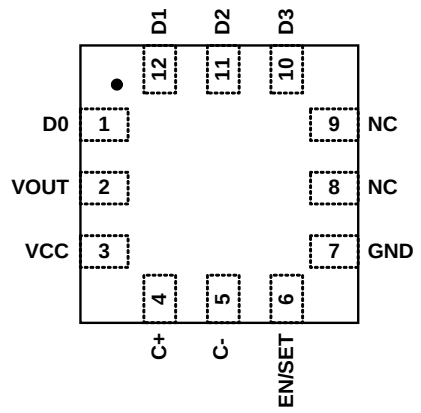

Table 6.1 Layout Requirements and Pin Descriptions—12-pin UTQFN Package

Pin Name	No.	Description
D0	1	LED output channel; pin must be used.
Vout	2	Charge pump output that drives load circuits; a 2.2µF (typical) capacitor must be connected from Vout to GND pin.
Vcc	3	Power supply input; a 2.2µF (minimum) bypass capacitor must be connected from Vcc to GND pin.
C+	4	Positive terminal of external pump capacitor.
C-	5	Negative terminal of external pump capacitor.
EN/SET	6	PCC serial input for enabling/disabling LEDs and setting current levels.
GND	7	Ground.
NC	8	No connection.
NC	9	No connection.
D3	10	LED output; if not used, connect to ground to avoid noise coupling.
D2	11	LED output; if not used, connect to ground to avoid noise coupling.
D1	12	LED output; if not used, connect to ground to avoid noise coupling.

Figure 6.2 UTQFN-12 Package Drawing

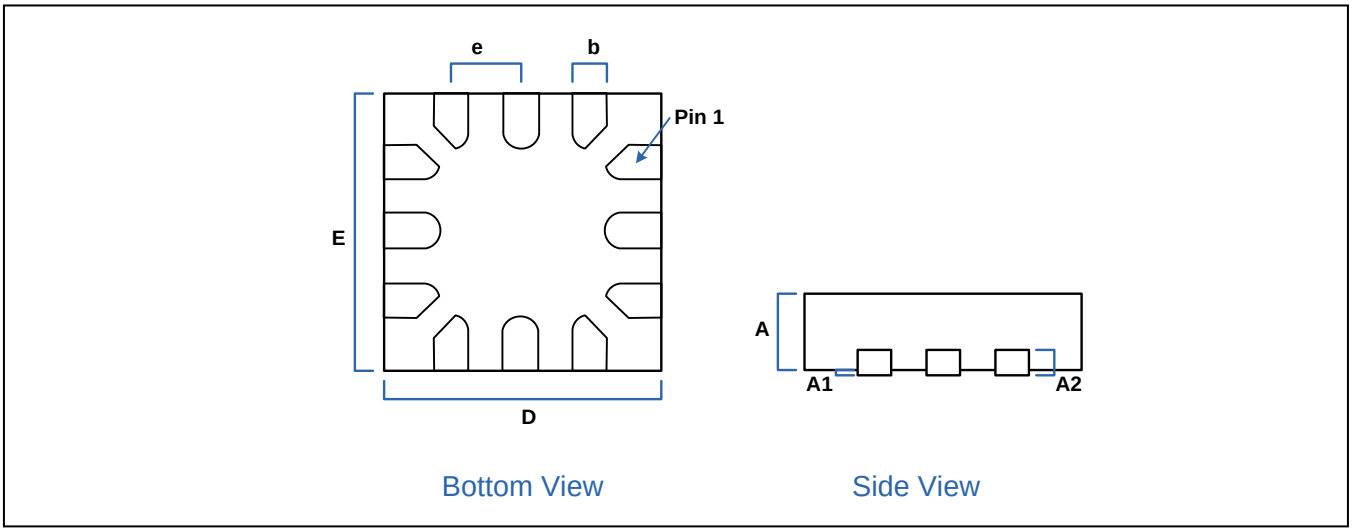

Table 6.2 UTQFN-12 Package Dimensions

Symbol	Dimension (mm)			Symbol	Dimension (mm)		
	Min	Nom	Max		Min	Nom	Max
A	0.50	0.55	0.60	D	1.95	2.00	2.05
A1	0.00	--	0.05	E	1.95	2.00	2.05
A2	0.25			e	0.50		
				b	0.20	0.25	0.30

7 Ordering Information

Product Sales Code	Description	Package
ZLED7012ZI1R	ZLED7012 – Low-Voltage Four-Channel LED Driver	UTQFN12 (2x2)mm, Tape & Reel
ZLED7012KIT-E1	ZLED7012 Evaluation Board	Kit

8 Glossary

Term	Description
EMI	Electromagnetic Interference
ESR	Equivalent Series Resistance: a capacitor parameter affected by characteristics such as component composition, size, leads, internal connections, and temperature
PCC	Pulse Count Control: a serial digital interface

9 Document Revision History

Revision	Date	Description
1.0	November 9, 2010	Official Release
	April 20, 2016	Changed to IDT branding.

Corporate Headquarters
6024 Silver Creek Valley Road
San Jose, CA 95138
www.IDT.com

Sales
1-800-345-7015 or 408-284-8200
Fax: 408-284-2775
www.IDT.com/go/sales

Tech Support
www.IDT.com/go/support

DISCLAIMER Integrated Device Technology, Inc. (IDT) reserves the right to modify the products and/or specifications described herein at any time, without notice, at IDT's sole discretion. Performance specifications and operating parameters of the described products are determined in an independent state and are not guaranteed to perform the same way when installed in customer products. The information contained herein is provided without representation or warranty of any kind, whether express or implied, including, but not limited to, the suitability of IDT's products for any particular purpose, an implied warranty of merchantability, or non-infringement of the intellectual property rights of others. This document is presented only as a guide and does not convey any license under intellectual property rights of IDT or any third parties.

IDT's products are not intended for use in applications involving extreme environmental conditions or in life support systems or similar devices where the failure or malfunction of an IDT product can be reasonably expected to significantly affect the health or safety of users. Anyone using an IDT product in such a manner does so at their own risk, absent an express, written agreement by IDT.

Integrated Device Technology, IDT and the IDT logo are trademarks or registered trademarks of IDT and its subsidiaries in the United States and other countries. Other trademarks used herein are the property of IDT or their respective third party owners. For datasheet type definitions and a glossary of common terms, visit www.idt.com/go/glossary. All contents of this document are copyright of Integrated Device Technology, Inc. All rights reserved.