The Analog Mixed Signal Company

Data Sheet

Rev. 3.0 / August 2011

ZLED7002

Toggle (Side-Step) Dual-Channel LED Driver



ZLED7002

Toggle (Side-Step) Dual-Channel LED Driver

Brief Description

The ZLED7002 toggle (side-step) dual-channel LED driver is one of our ZLED family of LED control ICs. It operates in the lower DC voltage supply range of 2.7V to 5.5V. This unique LED driver is capable of controlling a MAIN channel and a SUB channel. Typically, only one of the two channels is active and the ZLED7002 toggles between the channels automatically in response to the voltage supply level and the related voltage at the UV (under-voltage protection) pin. A high-to-low transition of the power supply causes the output current to switch from the MAIN channel to the SUB channel if the UV pin voltage ($V_{UV\text{-}PIN}$) is below the ZLED7002's under-voltage threshold ($V_{UVTHRSH}$=1.17V, typical). A low-to-high transition switches the output current from the SUB channel to the MAIN channel if the UV pin voltage is 80mV (typical) above the under-voltage threshold.

The MAIN channel is a configurable constant current source driving the MAIN LED string with a maximum current draw of 250mA. The MAIN LED channel current is set by an external resistor (R3) connected to the Iset pin. Alternately, the SUB channel is activated when the ZLED7002's SUB pin is pulled to ground. Its current is determined by the forward voltage of the SUB LED and external components. The SUB channel can drive up to 100mA current through the LED channel when active.

The ZLED7002 enables voltage-level indicator applications and low-power battery-driven lighting applications that require switching to a lower-current LED channel when the supply is low, which extends the lighting lifetime. Because the dropout voltage (V_{DP}) is minimal (as low as 0.1V when the MAIN channel output current is ~200mA), the ZLED7002 is optimal for battery-powered applications. Capable of operating efficiently with DC voltage supplies ranging from 2.7V to 5.5V, it is ideal for small portable lighting applications.

The ZLED7002 can also reduce bill-of-material costs because very few external components are required for most applications, making it an optimal fit for small devices for which lighting lifetime is critical. Only four resistors, a diode, and a capacitor are needed for a typical basic application.

Features

- Automatic MAIN channel short-circuit protection switches the output current to the SUB channel if the MAIN LED is shorted
- Under-voltage power supply detection
- Over-temperature protection

Benefits

- Extends lighting life-time by switching to a lower-current LED channel when the supply is low
- 80mV (typical) hysteresis prevents unintended switching activation due to power supply ripple
- Ultra low quiescent current: 250µA typical
- Very few external components needed for operation

Available Support

- Evaluation Kit

Physical Characteristics

- Voltage supply: 2.7V to 5.5V DC
- Operating temperature: -25℃ to 85℃
- Small SOP8 package

For additional information on our ZLED driver family, visit www.zmdi.com/products/led-drivers/

ZLED7002 Typical Application Circuit

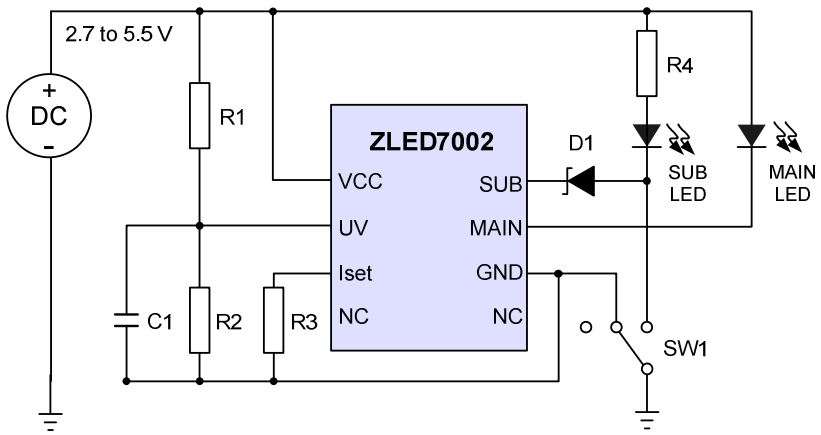

© **2011** Zentrum Mikroelektronik Dresden AG — **Rev. 3.0**
All rights reserved. The material contained herein may not be reproduced, adapted, merged, translated, stored, or used without the prior written consent of the copyright owner.
The information furnished in this publication is subject to changes without notice.

ZLED7002

Toggle (Side-Step) Dual-Channel LED Driver

The Analog Mixed Signal Company

SOP8 Package Dimensions and Pin Assignments

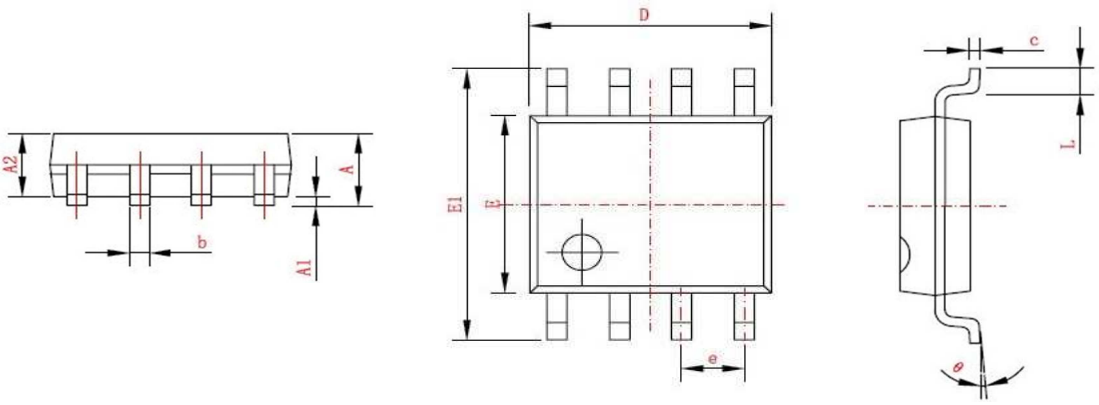

Symbol	Dimension (mm, except θ)	
	Min	Max
A	1.350	1.750
A1	0.100	0.250
A2	1.450 Typical	
b	0.350	0.490
c	0.178	0.250
D	4.800	5.000
E	3.800	4.000
E1	5.800	6.240
e	1.270 Typical	
L	0.400	1.270
θ	0°	8°

Typical Applications

- *Battery-driven LED lighting including*
  - *Helmet lighting*
  - *Bicycle lighting*
  - *Miner lamps*
  - *Pocket lights*
- *Voltage-level indicators*
- *General purpose low-voltage industrial and consumer LED applications*

Ordering Information

Product Sales Code	Description	Package
ZLED7002-ZI1R	ZLED7002 – Toggle (Side-Step) Dual-Channel LED Driver	SOP8 (Tape & Reel)
ZLED7002KIT-E1	ZLED7002 Evaluation Kit	Kit

Sales and Further Information

www.zmdi.com **LED_Drivers@zmdi.com**

Zentrum Mikroelektronik Dresden AG (ZMD AG)
Grenzstrasse 28
01109 Dresden
Germany

Phone +49 (0)351.8822.7.533
Fax +49 (0)351.8822.8.7533

ZMD America, Inc.
8413 Excelsior Drive
Suite 200
Madison, WI 53717
USA

Phone +1 (608) 829-1987
Fax +1 (631) 549-2882

Zentrum Mikroelektronik Dresden AG, Japan Office
2nd Floor, Shinbashi Tokyu Bldg.
4-21-3, Shinbashi, Minato-ku
Tokyo, 105-0004
Japan

Phone +81.3.6895.7410
Fax +81.3.6895.7301

ZMD FAR EAST, Ltd.
3F, No. 51, Sec. 2,
Keelung Road
11052 Taipei
Taiwan

Phone +886.2.2377.8189
Fax +886.2.2377.8199

DISCLAIMER: This information applies to a product under development. Its characteristics and specifications are subject to change without notice. Zentrum Mikroelektronik Dresden AG (ZMD AG) assumes no obligation regarding future manufacture unless otherwise agreed to in writing. The information furnished hereby is believed to be true and accurate. However, under no circumstances shall ZMD AG be liable to any customer, licensee, or any other third party for any special, indirect, incidental, or consequential damages of any kind or nature whatsoever arising out of or in any way related to the furnishing, performance, or use of this technical data. ZMD AG hereby expressly disclaims any liability of ZMD AG to any customer, licensee or any other third party, and any such customer, licensee and any other third party hereby waives any liability of ZMD AG for any damages in connection with or arising out of the furnishing, performance or use of this technical data, whether based on contract, warranty, tort (including negligence), strict liability, or otherwise.

© **2011** Zentrum Mikroelektronik Dresden AG — **Rev. 3.0**
All rights reserved. The material contained herein may not be reproduced, adapted, merged, translated, stored, or used without the prior written consent of the copyright owner.

Contents

1 IC Characteristics 5
1.1. Absolute Maximum Ratings 5
1.2. Operating Conditions 5
1.3. Electrical Parameters 5
1.4. Typical Performance Graphs 6
2 Circuit Description 7
2.1. ZLED7002 Overview 7
2.2. Under-Voltage Threshold 8
2.3. Main LED Current 8
2.4. Sub LED Current 8
2.5. ZLED7002 Protection Features 9
2.5.1. Over-Temperature Protection 9
2.5.2. Main LED Short-Circuit Protection 9
3 Application Circuit Design 10
3.1. Applications 10
3.2. Application Circuit Layout Requirements 10
4 ESD Protection 11
5 Pin Configuration and Package 11
6 Ordering Information 13
7 Document Revision History 13

List of Figures

Figure 1.1 Iset Pin Voltage versus Temperature (+10℃ to 100℃) 6
Figure 1.2 Main LED Current versus Power Supply (4V to 5.4V DC) 7
Figure 3.1 Basic ZLED7002 Application Circuit 10
Figure 5.1 ZLED7002 Pin Configuration 11
Figure 5.2 SOP8 Package Drawing 12

List of Tables

Table 5.1 ZLED7002 Pin Descriptions and Connection Requirements—SOP8 Package 11
Table 5.2 SOP8 Package Dimensions 12

© **2011** Zentrum Mikroelektronik Dresden AG — **Rev.3.0**
All rights reserved. The material contained herein may not be reproduced, adapted, merged, translated, stored, or used without the prior written consent of the copyright owner. The information furnished in this publication is subject to changes without notice.

1 IC Characteristics

1.1. Absolute Maximum Ratings

No.	PARAMETER	SYMBOL	CONDITIONS	MIN	TYP	MAX	UNIT
1.1.1	Input voltage	V_{CC}		-0.3		6.5	V
1.1.2	Iset pin voltage	V_{ISET}		-0.3		6.5	V
1.1.3	UV pin voltage	V_{UV-PIN}		-0.3		6.5	V
1.1.4	MAIN pin voltage	V_{MAIN}		-0.3		6.5	V
1.1.5	SUB pin voltage	V_{SUB}		-0.3		6.5	V
1.1.6	MAIN pin current	I_{MAIN_ABS}				500	mA
1.1.7	SUB pin current	I_{SUB_ABS}				300	mA
1.1.8	ESD performance	P_{tot}	Human Body Model	±4			kV
1.1.9	Junction temperature	T_J				150	℃
1.1.10	Storage temperature	T_S		-60		150	℃

1.2. Operating Conditions

No.	PARAMETER	SYMBOL	CONDITIONS	MIN	TYP	MAX	UNIT
1.2.1	Operating temperature	T_{amb}		-25		+85	℃
1.2.2	Input voltage	V_{CC}		2.7		5.5	V

1.3. Electrical Parameters

Except as noted, conditions for the following specifications are T_{amb} = -25℃ to +85℃ (25℃ typical); V_{CC} = 2.7V to 5.5V.

Production testing of the chip is performed at 25℃; V_{CC}=3.6V, unless otherwise stated. Functional operation of the chip and specified parameters at other temperatures are guaranteed by design, characterization, and process control.

No.	PARAMETER	SYMBOL	CONDITIONS	MIN	TYP	MAX	UNIT
1.3.1	Quiescent current	I_{CC}	2.7 ≤ V_{CC} ≤ 5.5; 1.4 < V_{UV-PIN} < 5.5; no load		250	320	uA
1.3.2	I_{MAIN} to I_{ISET} ratio	--	V_{CC} = 4.2V, R3 = 30KΩ		8000		
1.3.3	Iset pin voltage	V_{ISET}			1.2		V
1.3.4	Main LED current accuracy	--	V_{CC} = 2.7V; V_{MAIN} =0.5V		±5		%
1.3.5	Dropout voltage – MAIN channel current source	V_{DP}	Iout=204mA, Rset=47K			0.2	V
1.3.6	“ON” resistance – SUB channel	R_{SUB}	2.7V ≤ Vcc ≤ 5.5V			2.0	Ω
1.3.7	UV pin under-voltage threshold	$V_{UVTHRSH}$	Switches from MAIN LED to SUB LED if V_{UV-PIN} transitions from high to low voltage and V_{UV-PIN} is lower than $V_{UVTHRSH}$.	1.13	1.17	1.21	V

© 2011 Zentrum Mikroelektronik Dresden AG — **Rev.3.0**
All rights reserved. The material contained herein may not be reproduced, adapted, merged, translated, stored, or used without the prior written consent of the copyright owner. The information furnished in this publication is subject to changes without notice.

No.	PARAMETER	SYMBOL	CONDITIONS	MIN	TYP	MAX	UNIT
1.3.8	UV pin comparator hysteresis (upper threshold – under-voltage threshold)	V_{UVHYS}	Switches from SUB LED to MAIN LED if V_{UV-PIN} transitions from low voltage to high voltage and V_{UV-PIN} is higher than $V_{UVTHRSH}$ + V_{UVHYS} (the upper threshold).		80		mV
1.3.9	Thermal protection threshold	T_{SD}			160		℃
1.3.10	Junction-to-ambient temperature	$R_{\theta JA}$			128		℃/W
1.3.11	MAIN pin current	I_{MAIN}			250mA		mA
1.3.12	SUB pin current	I_{SUB}			100mA		mA

1.4. Typical Performance Graphs

Figure 1.1 Iset Pin Voltage versus Temperature (+10°C to 100℃)

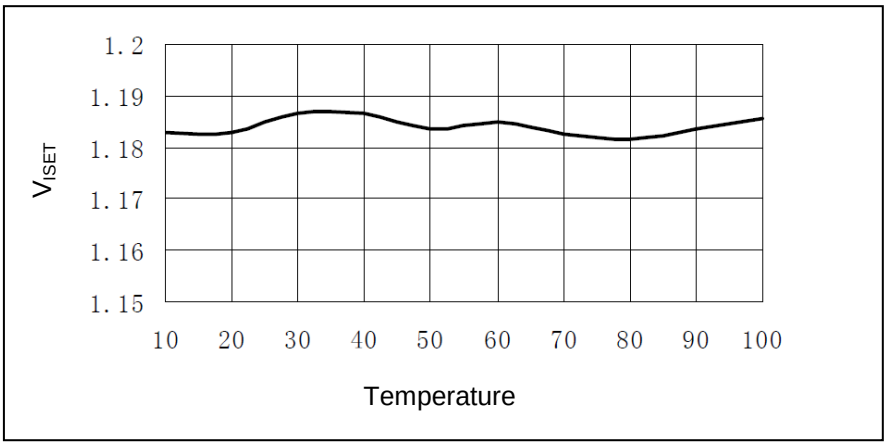

© 2011 Zentrum Mikroelektronik Dresden AG — Rev.3.0
All rights reserved. The material contained herein may not be reproduced, adapted, merged, translated, stored, or used without the prior written consent of the copyright owner. The information furnished in this publication is subject to changes without notice.

Figure 1.2 Main LED Current versus Power Supply (4V to 5.4V DC)

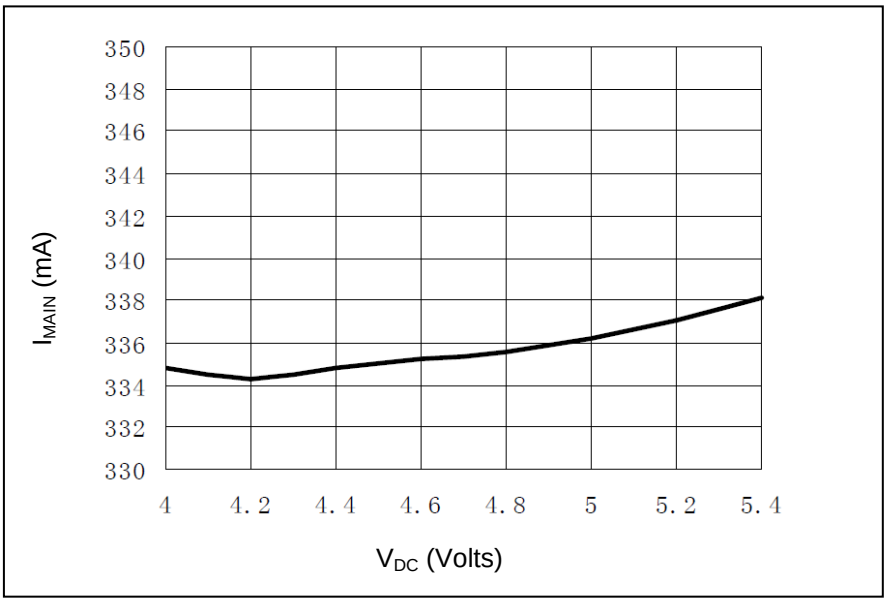

2 Circuit Description

2.1. ZLED7002 Overview

The ZLED7002 is an LED driver for two channels designated as the MAIN channel and the SUB channel. Typically, only one of the channels is on and the other is off. External resistors R1 and R2 connected to UV pin form a voltage divider across the power supply. When the power supply voltage has risen high enough to create a voltage at the UV pin that is above a set threshold, the MAIN LED channel is activated and the SUB channel is off. If the supply falls and the resulting voltage at the UV pin is below the threshold, the SUB channel becomes active and the MAIN channel is turned off.

When the MAIN channel is active, the ZLED7002 provides a constant current source for driving the MAIN LED channel. Its current level is set by an external resistor (R3) between the Iset and GND pins (see section 2.3). When the SUB LED channel is active, its current is determined by external components (see section 2.4) and the ZLED7002 pulls the SUB pin to ground.

Refer to the application circuit in Figure 3.1 for the location of the components referred to in the following sections.

© 2011 Zentrum Mikroelektronik Dresden AG — **Rev.3.0**
All rights reserved. The material contained herein may not be reproduced, adapted, merged, translated, stored, or used without the prior written consent of the copyright owner. The information furnished in this publication is subject to changes without notice.

2.2. Under-Voltage Threshold

The ZLED7002's UV pin enables under-voltage detection. When a high-to-low transition occurs on the power supply voltage and the voltage at the UV pin falls below the under-voltage threshold (typically 1.17V), the ZLED7002 automatically turns off the MAIN LED channel and actives the SUB channel. There is an 80mV hysteresis for the under-voltage threshold to prevent unintended activation due to power supply ripple. When a low-to-high transition occurs on the power supply voltage, the SUB channel is turned off and the MAIN channel is activated if the UV pin voltage is 80mV (typical) above the under-voltage threshold.

The voltage at the UV pin (V_{UV-PIN}) is determined by the ratio of the external resistors R1 and R2 (see Figure 3.1), which connect to the UV pin to form a voltage divider across the power supply. V_{UV-PIN} can be calculated with equation (1):

$$V_{UV-PIN} = V_{CC}\left(\frac{R2}{R1+R2}\right) \quad \textbf{(1)}$$

If the values for R1 and R2 are low, high current will flow through them resulting in lower system efficiency. Typical values for R1 and R2 are in the magnitude of 10^5; e.g., 51kΩ. For design purposes, it is helpful to select the value for R2 first and then compute R1 as needed to achieve the target ratio.

For applications using a lithium battery, which typically maintains ~3.7V during its discharge stage, setting V_{UV-PIN} to 3.4V is recommended.

2.3. Main LED Current

The R3 resistor connected between the Iset and GND pins determines the level of the constant current through the MAIN LED channel, which is typically 8000 times the current of the Iset pin. The voltage at the Iset pin is a constant 1.2V, which is unaffected by environmental temperature and any power supply voltage changes as shown in Figure 1.1 and Figure 1.2.

The MAIN LED current flows through the MAIN pin to ground, so voltage dropout is minimal (as low as 0.1V when the MAIN channel current is 200mA).

Note: System efficiency is reduced if the power supply voltage is larger than the MAIN LED's voltage. In this case, the additional voltage is added to the MAIN pin voltage.

The MAIN LED channel current (I_{MAIN}) is calculated via equation (2):

$$I_{MAIN} = 8000\left(\frac{V_{ISET}}{R3}\right) \quad \textbf{(2)}$$

2.4. Sub LED Current

The SUB LED channel current is determined by the external R4 resistor in series with the connected SUB LED string, the SUB LED forward voltage, and the voltage drop across the D1 Zener diode connected from the cathode of the SUB LED to the SUB pin. When the SUB channel is active, its current flows through the SUB pin to ground.

© 2011 Zentrum Mikroelektronik Dresden AG — **Rev.3.0**
All rights reserved. The material contained herein may not be reproduced, adapted, merged, translated, stored, or used without the prior written consent of the copyright owner. The information furnished in this publication is subject to changes without notice.

The SUB LED channel current (I_{SUB}) is calculated via equation (3):

$$I_{SUB} = \left(\frac{V_{CC} - V_{FSUB-LED} - V_{FD1}}{R4} \right) \quad \textbf{(3)}$$

Where

$V_{FSUB-LED}$ = The forward voltage of the SUB LED

V_{FD1} = The forward voltage of Zener diode D1, which should be as small as possible

2.5. ZLED7002 Protection Features

2.5.1. Over-Temperature Protection

The ZLED7002 includes protection from damage due to over-temperature conditions. The ZLED7002 automatically turns off if its temperature is ≥160℃ (typical). If the temperature returns to ≤140℃, the ZLED7002 turns on and continues normal operation.

2.5.2. Main LED Short-Circuit Protection

The ZLED7002 will detect a short-circuit on the MAIN LED. In this case, the ZLED7002 automatically turns off the MAIN LED channel and activates the SUB LED channel.

© 2011 Zentrum Mikroelektronik Dresden AG — **Rev.3.0**
All rights reserved. The material contained herein may not be reproduced, adapted, merged, translated, stored, or used without the prior written consent of the copyright owner. The information furnished in this publication is subject to changes without notice.

3 Application Circuit Design

3.1. Applications

The ZLED7002 is designed for small battery-powered lighting life-time critical applications. Capable of operating efficiently with DC voltage supplies ranging from 2.7V to 5.5V, it is ideal for small portable lighting applications. Typical applications include helmet lighting, head/tail lights for bicycles, miner lamps, pocket lights, and various other general purpose low-voltage industrial and consumer LED applications.

Figure 3.1 Basic ZLED7002 Application Circuit

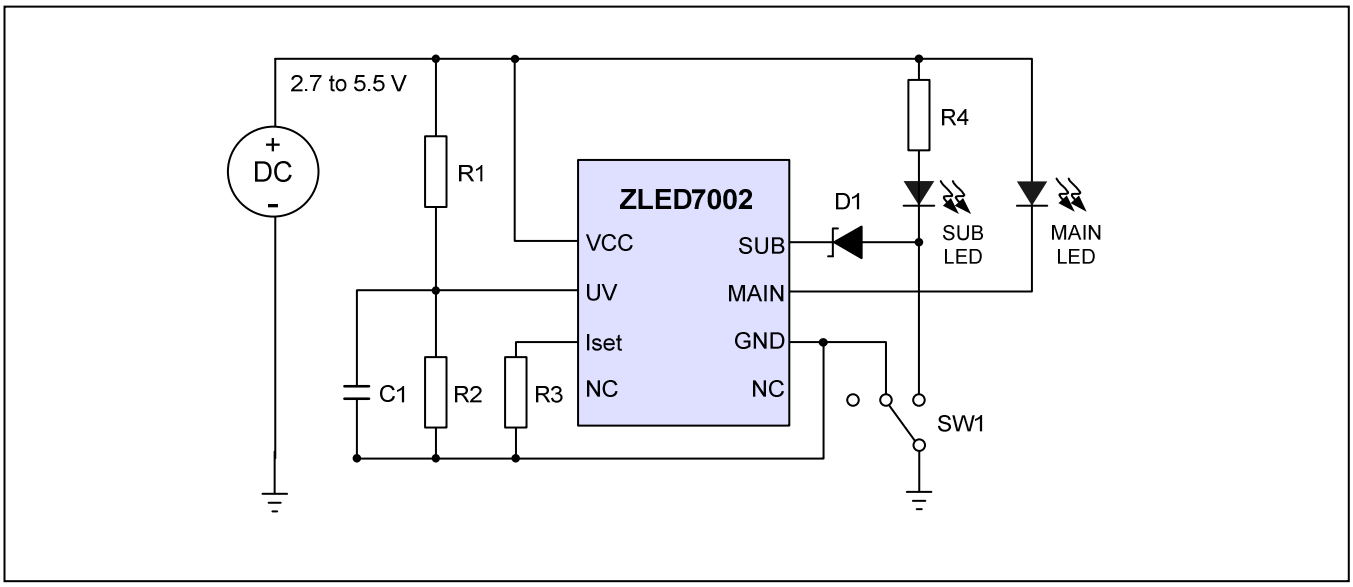

3.2. Application Circuit Layout Requirements

The following guidelines are strongly recommended when laying out application circuits:

- Use a 0.1µf capacitor connected between the UV pin and ground to minimize noise picked up on the UV pin. Place the capacitor close to the UV pin.
- If the application includes a switch as shown in Figure 3.1, locate it at the lowest voltage point to avoid sparks when switching.
- Use traces that are as short and wide as possible for any traces leading to actual ground that occur between the GND pin and Iset pin. This improves accuracy for the MAIN LED current and the under-voltage threshold.

Also see Table 5.1 for connection requirements.

© 2011 Zentrum Mikroelektronik Dresden AG — **Rev.3.0**
All rights reserved. The material contained herein may not be reproduced, adapted, merged, translated, stored, or used without the prior written consent of the copyright owner. The information furnished in this publication is subject to changes without notice.

4 ESD Protection

All pins have an ESD protection of ≥±4000V according the Human Body Model (HBM). The ESD test follows the Human Body Model with 1.5 kΩ/100 pF based on MIL 883-G, Method 3015.7.

5 Pin Configuration and Package

Figure 5.1 ZLED7002 Pin Configuration

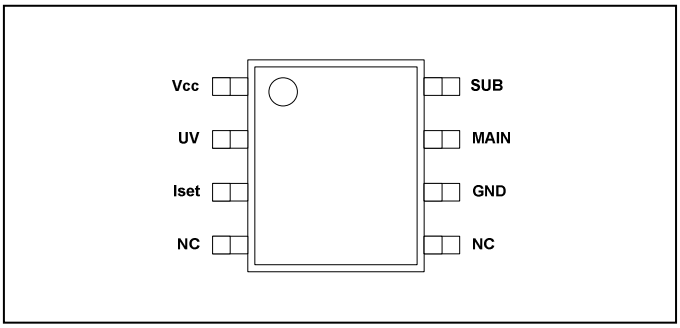

Table 5.1 ZLED7002 Pin Descriptions and Connection Requirements—SOP8 Package

Pin	No.	**Description** (Also see section 3.2 for layout guidelines)
V_{CC}	1	Power supply (2.7V to 5.5V).
UV	2	Under-voltage detection input.
I_{SET}	3	Input for external resistor that sets the current for the MAIN LED channel.
NC	4	No connection.
NC	5	No connection.
GND	6	Connect to ground.
MAIN	7	MAIN channel constant current source. Connect to cathode of MAIN LED.
SUB	8	SUB channel current sink. Connect to cathode of D1 (Zener diode) connected to cathode of SUB LED.

© 2011 Zentrum Mikroelektronik Dresden AG — **Rev.3.0**
All rights reserved. The material contained herein may not be reproduced, adapted, merged, translated, stored, or used without the prior written consent of the copyright owner. The information furnished in this publication is subject to changes without notice.

Figure 5.2 SOP8 Package Drawing

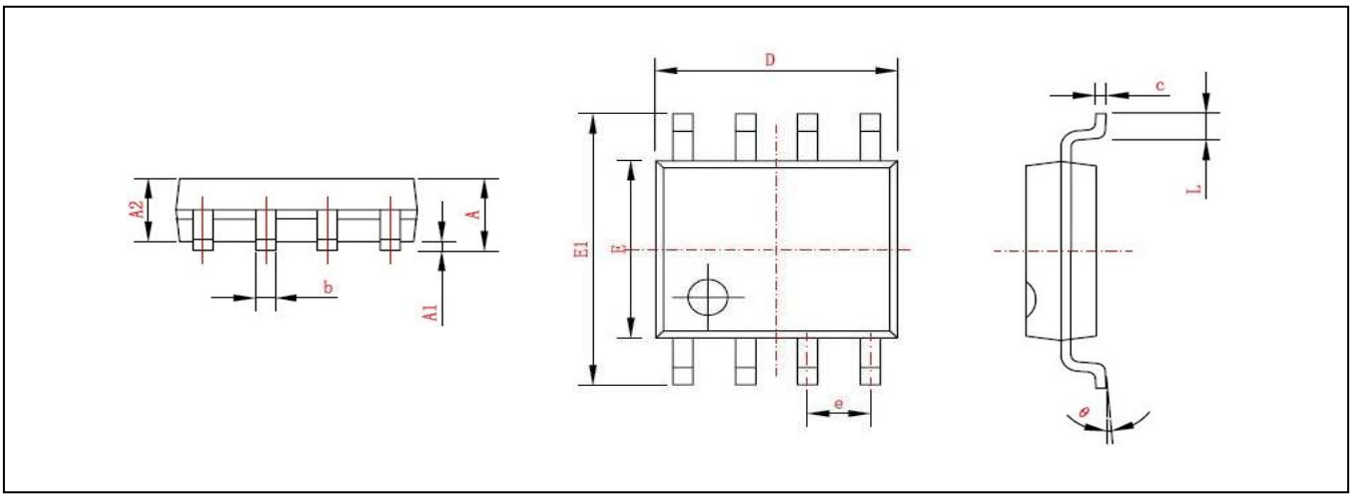

Table 5.2 SOP8 Package Dimensions

Symbol	Dimension (mm)		Symbol	Dimension (mm, except θ)	
	Min	Max		Min	Max
A	1.350	1.750	E	3.800	4.000
A1	0.100	0.250	E1	5.800	6.240
A2	1.450 Typical		e	1.270 Typical	
b	0.350	0.490	L	0.400	1.270
c	0.178	0.250	θ	0°	8°
D	4.800	5.000			

© 2011 Zentrum Mikroelektronik Dresden AG — **Rev.3.0**
All rights reserved. The material contained herein may not be reproduced, adapted, merged, translated, stored, or used without the prior written consent of the copyright owner. The information furnished in this publication is subject to changes without notice.

6 Ordering Information

Product Sales Code	Description	Package
ZLED7002-ZI1R	ZLED7002 – Toggle (Side-Step) Dual-Channel LED Driver	SOP8 (Tape & Reel)
ZLED7002KIT-E1	ZLED7002 Evaluation Kit	Kit

7 Document Revision History

Revision	Date	Description
1.0	15 July, 2011	First issue.
3.0	10 August, 2011	Third issue. Aligned file and revision numbers.

Sales and Further Information www.zmdi.com LED_Drivers@zmdi.com

Zentrum Mikroelektronik Dresden AG (ZMD AG)
Grenzstrasse 28
01109 Dresden
Germany

Phone +49 (0)351.8822.7.533
Fax +49 (0)351.8822.8.7533

ZMD America, Inc.
8413 Excelsior Drive
Suite 200
Madison, WI 53717
USA

Phone +1 (608) 829-1987
Fax +1 (631) 549-2882

Zentrum Mikroelektronik Dresden AG, Japan Office
2nd Floor, Shinbashi Tokyu Bldg.
4-21-3, Shinbashi, Minato-ku
Tokyo, 105-0004
Japan

Phone +81.3.6895.7410
Fax +81.3.6895.7301

ZMD FAR EAST, Ltd.
3F, No. 51, Sec. 2,
Keelung Road
11052 Taipei
Taiwan

Phone +886.2.2377.8189
Fax +886.2.2377.8199

DISCLAIMER: This information applies to a product under development. Its characteristics and specifications are subject to change without notice. Zentrum Mikroelektronik Dresden AG (ZMD AG) assumes no obligation regarding future manufacture unless otherwise agreed to in writing. The information furnished hereby is believed to be true and accurate. However, under no circumstances shall ZMD AG be liable to any customer, licensee, or any other third party for any special, indirect, incidental, or consequential damages of any kind or nature whatsoever arising out of or in any way related to the furnishing, performance, or use of this technical data. ZMD AG hereby expressly disclaims any liability of ZMD AG to any customer, licensee or any other third party, and any such customer, licensee and any other third party hereby waives any liability of ZMD AG for any damages in connection with or arising out of the furnishing, performance or use of this technical data, whether based on contract, warranty, tort (including negligence), strict liability, or otherwise.

© 2011 Zentrum Mikroelektronik Dresden AG **— Rev.3.0**
All rights reserved. The material contained herein may not be reproduced, adapted, merged, translated, stored, or used without the prior written consent of the copyright owner. The information furnished in this publication is subject to changes without notice.

Mouser Electronics

Authorized Distributor

Click to View Pricing, Inventory, Delivery & Lifecycle Information:

ZMDI:
ZLED7002ZI1R