ZL60402

2.5 Gbps, 1310 nm Uncooled Fabry-Perot Laser Diode Module with Monitor

Data Sheet

December 2003

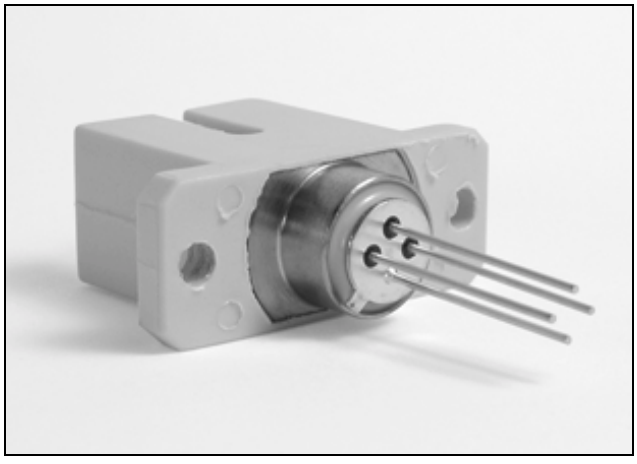

Ordering Information

ZL60402TBD	TO-56 with lens
ZL60402TDD	ST type connector
ZL60402TED	SC type connector
ZL60402TFD	FC type connector

-40°C to +85°C

Features

- Uncooled 1300 nm Fabry-Perot Laser Diode
- Wide operating temperature range -40°C to +85°C
- High reliability
- Built-in monitor diode
- 2.5 Gbps
- Ball lens or receptable type of packaging

Applications

- Telecommunications applications, SONET OC-48, SDH STM-16
- Optical communications systems

Description

The Fabry-Perot Laser Diode Receptacle type series is designed for use with SC, FC and ST type fiber connectors as source in telecom and datacom applications.

The ZL60402 is a 1310 nm MQW (Multiple Quantum Well) Fabry-Perot laser diode, integrated with a monitor diode.

The hermatically sealed package includes a ball lens for improved coupling efficiency.

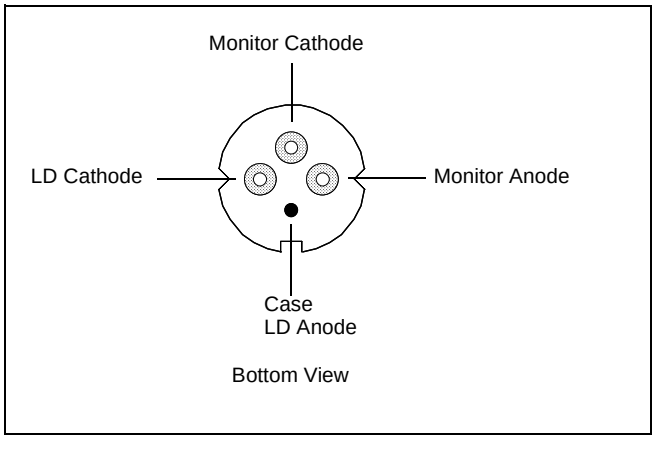

Figure 1 - PIN Diagram

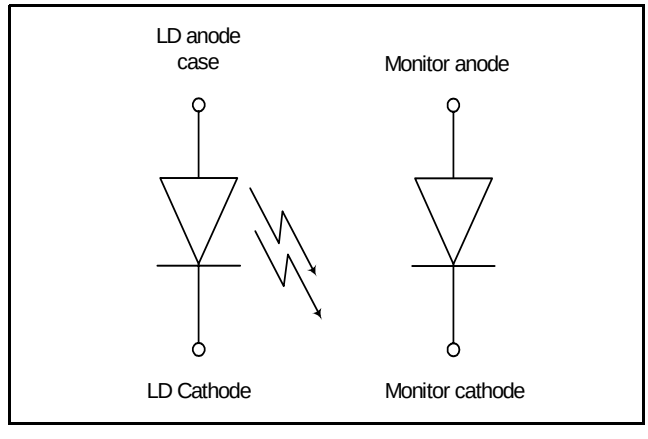

Figure 2 - Functional Schematic

Zarlink Semiconductor Inc.
Zarlink, ZL and the Zarlink Semiconductor logo are trademarks of Zarlink Semiconductor Inc.
Copyright 2003, Zarlink Semiconductor Inc. All Rights Reserved.

Electrical and Optical Characteristics (T_C = 25°C)

Parameter	Symbol	Conditions	Min.	Typ.	Max.	Unit
Threshold Current	I_{th}	CW		10	15	mA
Operating Voltage	V_{op}	CW, $I_f = I_{th}$+20 mA		1.3	1.5	V
Optical Output Power	P_f	CW, $I_f = I_{th}$+20 mA		0.6		mW
Wavelength	λ	CW, I_{th}+20 mA	1290	1310	1330	nm
Spectral Width	$\Delta\lambda$	CW, I_{th}+20 mA		1	3	nm
Rise and Fall Times	t_r , t_f	$I_f = I_{th}$+20 mA, 20-80%			150	ps
Tracking Error	$\Delta P_f / P_f$	APC, 0 - +70°C -40°C - +85°C	-1.5 -2.5		1.5 2.5	dB
Monitor Current	I_D	CW, I_{th}+20 mA, V_{RD} = 1 V	100			µA
Monitor Dark Current	I_D	V_{RD} = 5 V			1	µA
Monitor Capacitance	C_D	V_{RD} = 5 V, f = 1 MHz		10	15	pF

Absolute Maximum Ratings

Parameter	Symbol	Rating	Unit
LD Reverse Voltage	V_{RL}	2	V
PD Reverse Voltage	V_{RD}	20	V
PD Forward Current	I_f	2.0	mA
Operating Temperature	T_{op}	-40 - +85	°C
Storage Temperature	T_{stg}	-40 - +85	°C

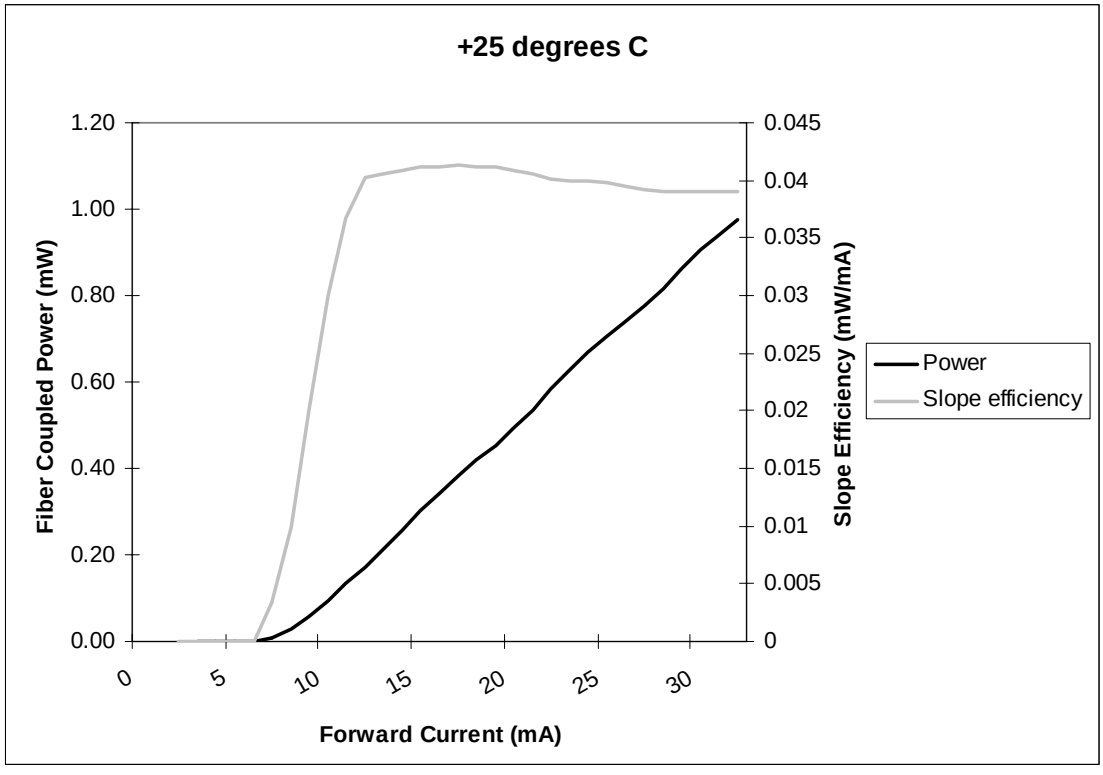

Figure 3 - Typical Fiber Coupled Power and Slope Efficiency at Room Temperature

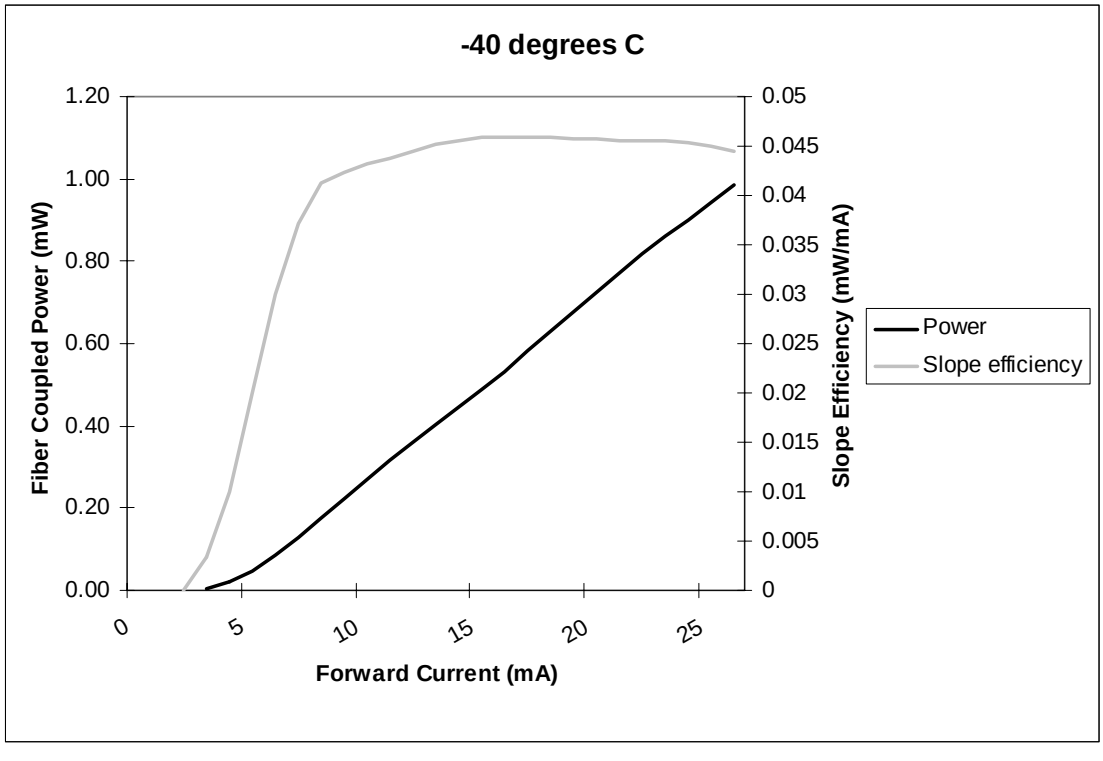

Figure 4 - Typical Fiber Coupled Power and Slope Efficiency at Low Temperature

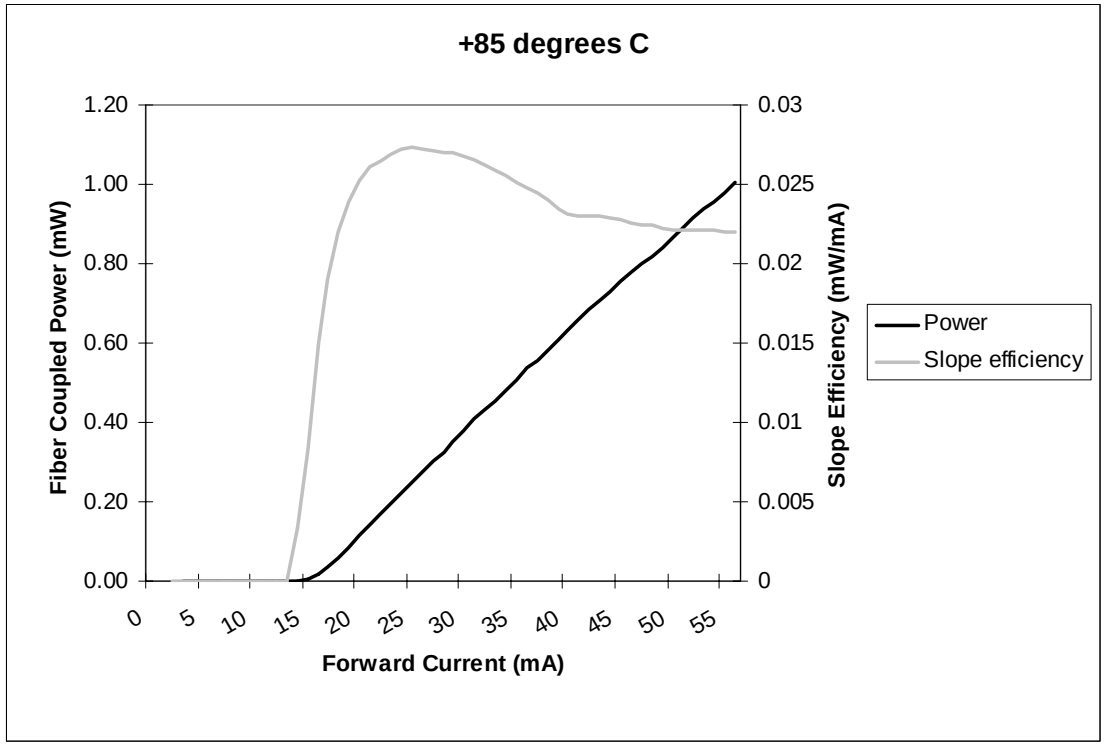

Figure 5 - Typical Fiber Coupled Power and Slope Efficiency at High Temperature

FRONT VIEW (2 : 1)

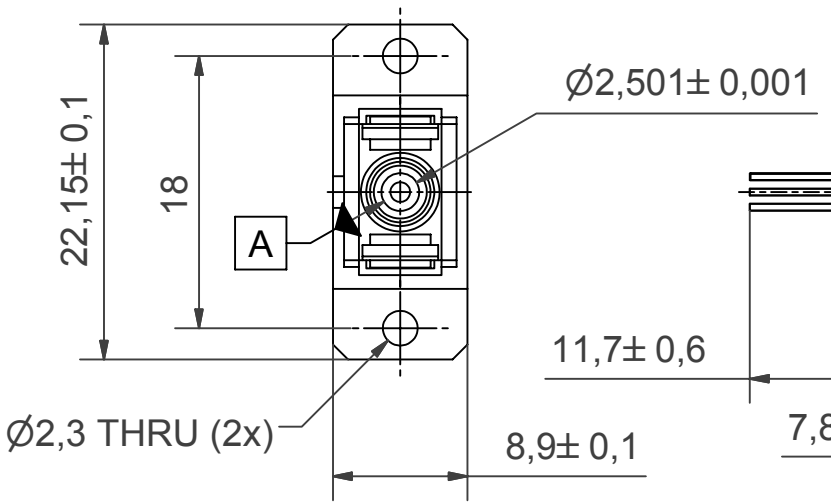

SIDE VIEW

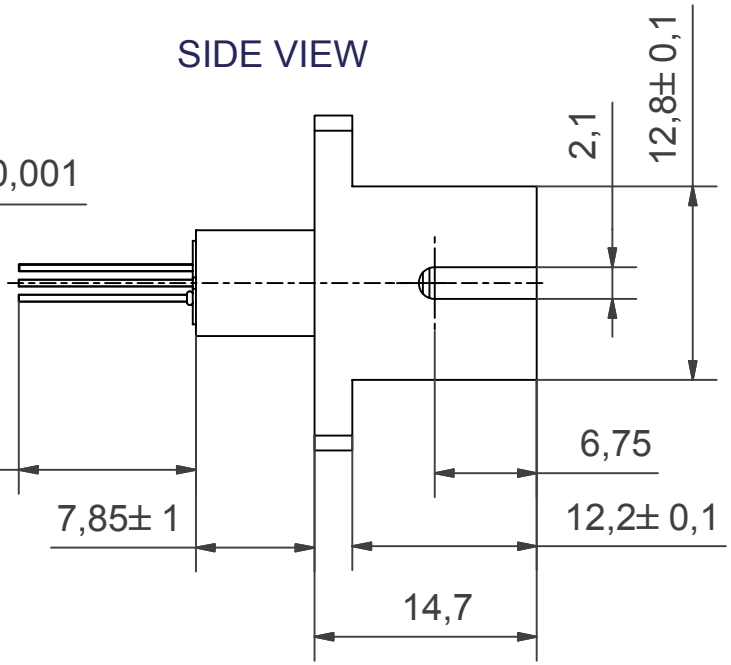

BOTTOM VIEW

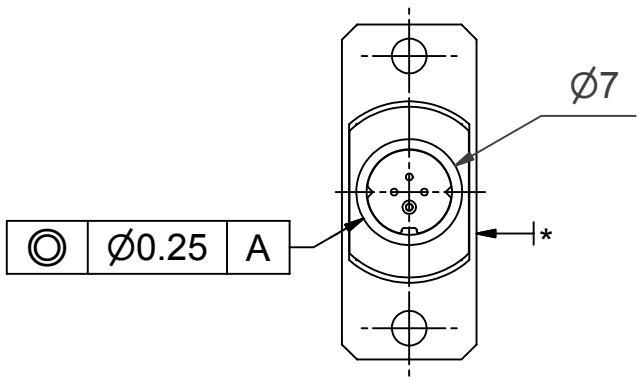

* Slot side.

ISOMETRIC VIEW

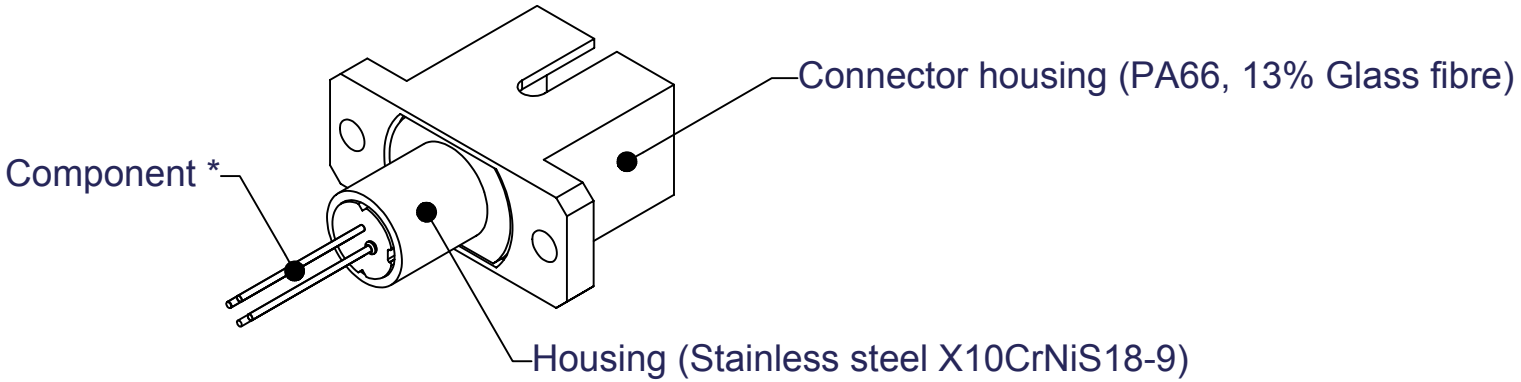

NOTES:-

1. All dimensions in mm.
2. General tol. ISO-2768-mK.

* For details of the component, see separate data sheet and/or package drawing.

Projection

© Zarlink Semiconductor 2002. All rights reserved.

ISSUE	1			
ACN	101512rev 1			
DATE	17-NOV-03			
APPRD.	PD\US			

ZARLINK SEMICONDUCTOR

Previous package codes

Package code TE

Drawing type
TO-56 Package Outline in SC
Connector housing

Title 101512

FRONT VIEW (2 : 1)

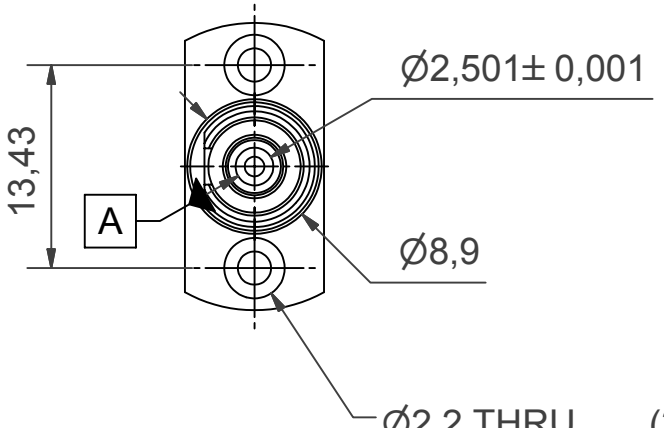

SIDE VIEW

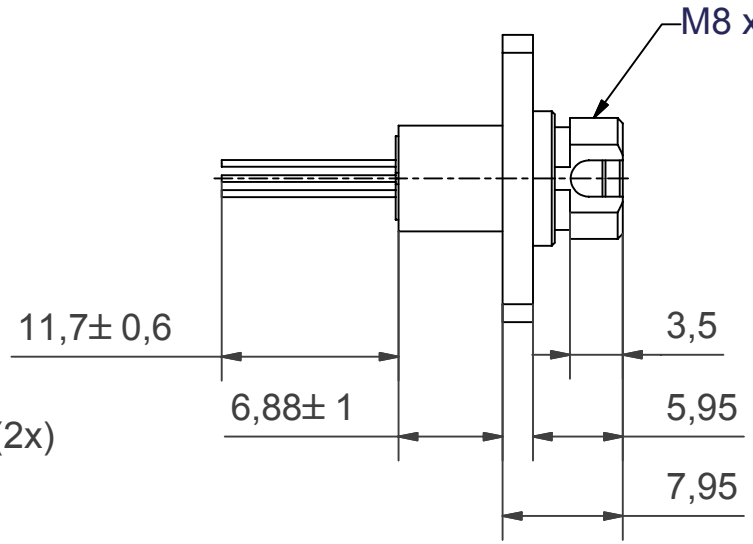

BOTTOM VIEW

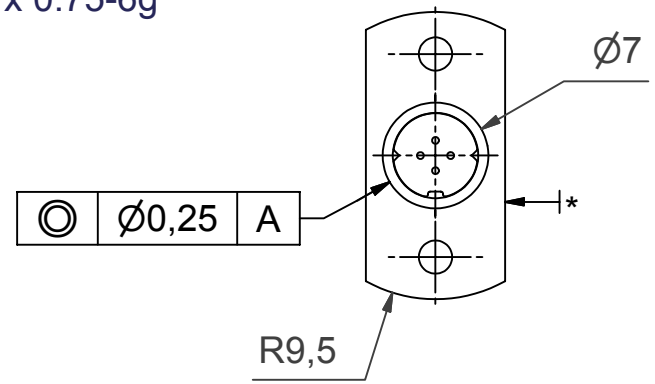

* Slot side.

ISOMETRIC VIEW

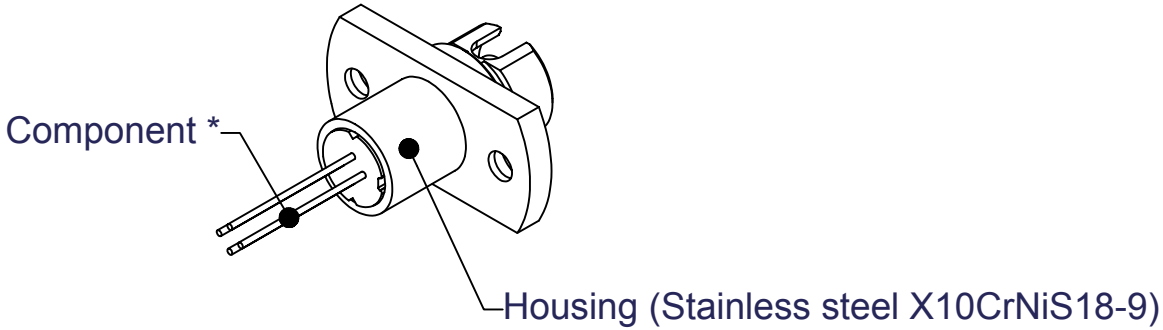

NOTES:-

1. All dimensions in mm.
2. General tol. ISO-2768-mK.

* For details of the component, see separate data sheet and/or package drawing.

Projection

© Zarlink Semiconductor 2002. All rights reserved.

ISSUE	1			
ACN	101513 rev1			
DATE	17-NOV-03			
APPRD.	PD\US			

ZARLINK SEMICONDUCTOR

	Package code TF
Previous package codes	Drawing type TO-56 Package Outline in FC Connector housing
	Title 101513

BOTTOM VIEW (10 : 1)

SIDE VIEW

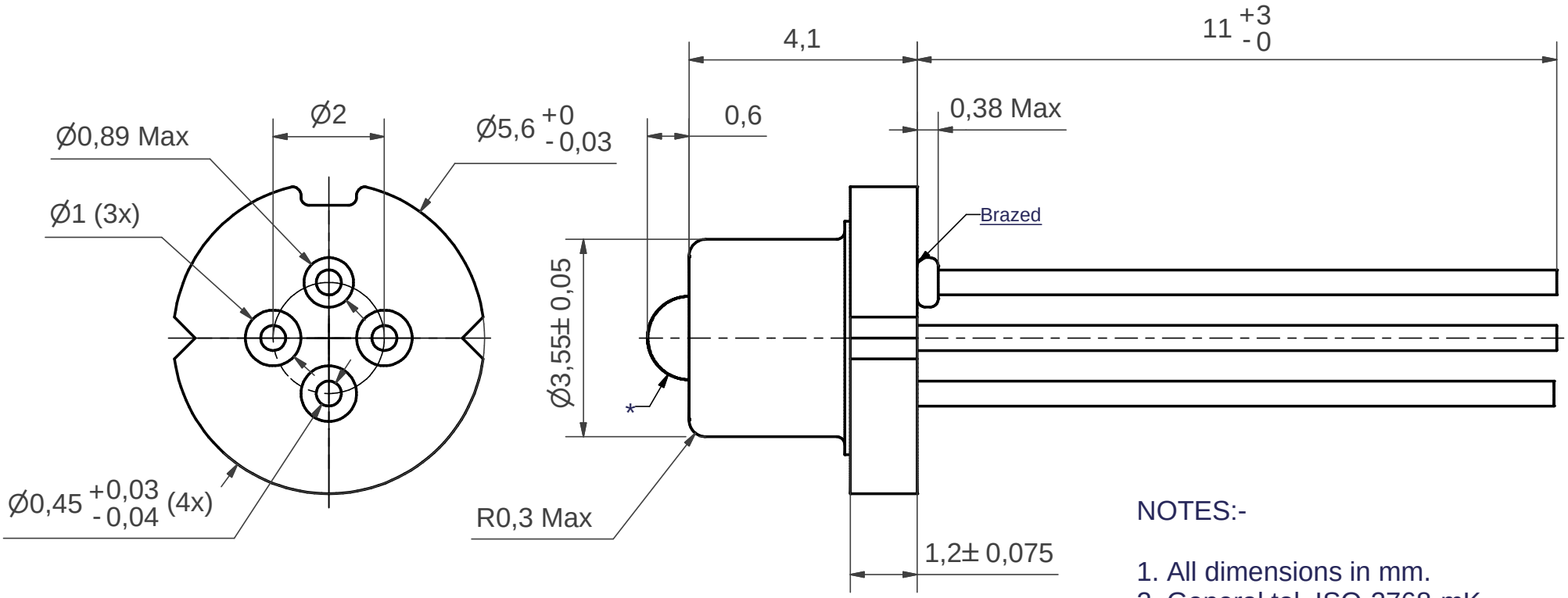

NOTES:-

1. All dimensions in mm.
2. General tol. ISO-2768-mK.
3. Coating: Case: Ni 3-7 µm.
   Header: Ni 2-4 µm / Au 0,5 µm.

* Lens Ø1,5± 0,002

Projection Method

© Zarlink Semiconductor 2002. All rights reserved.

ISSUE	1			
ACN	101615 rev1			
DATE	21-NOV-03			
APPRD.	MD/MA			

ZARLINK SEMICONDUCTOR

Previous package codes

Package code TB

Drawing type
Package Drawing, TO-56 with lens

Title 101615

FRONT VIEW (2 : 1)

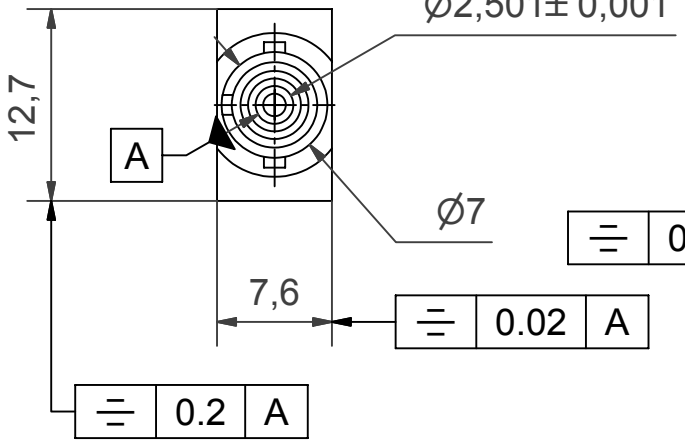

SIDE VIEW

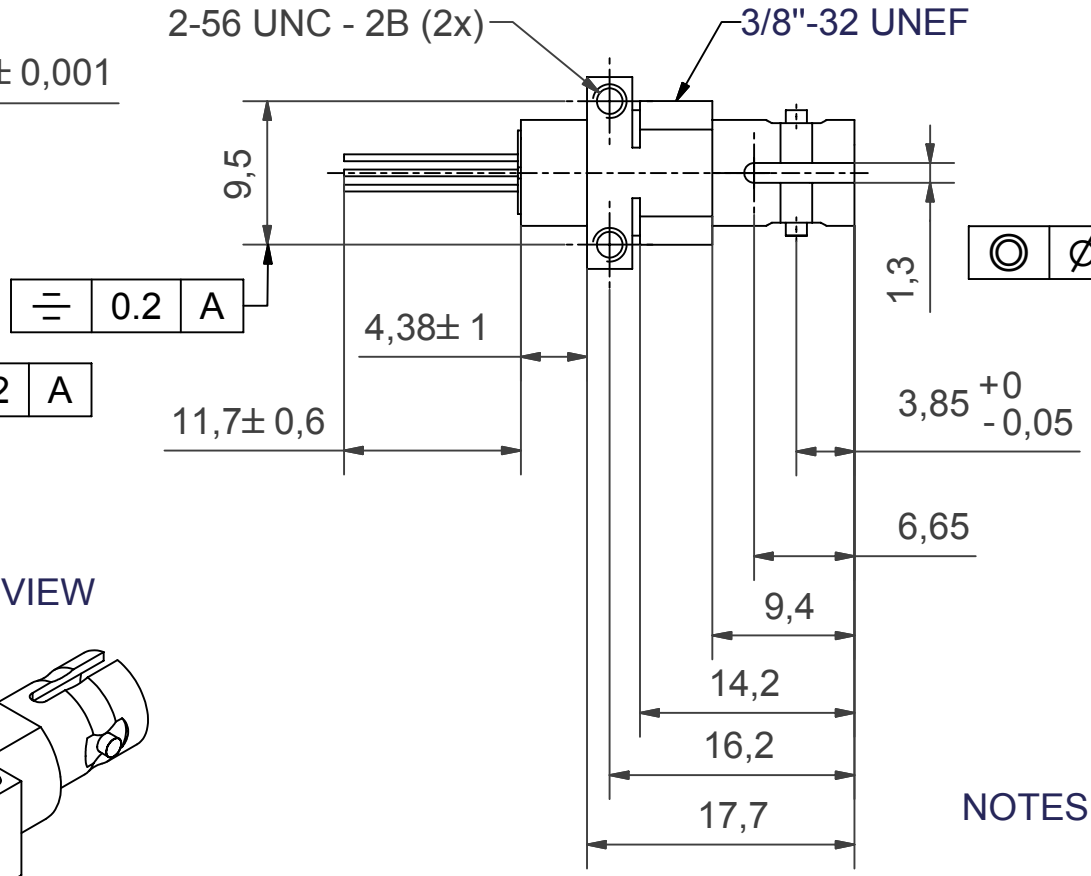

BOTTOM VIEW

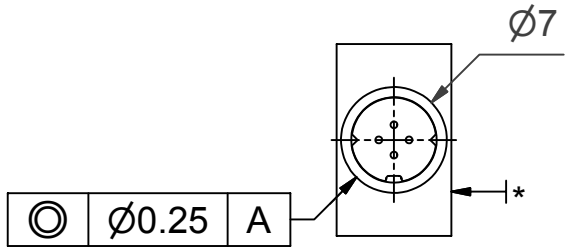

* Slot side.

ISOMETRIC VIEW

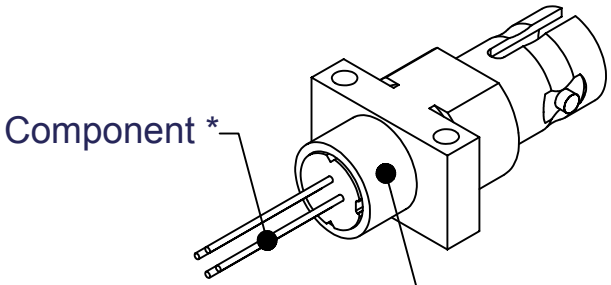

NOTES:-

1. All dimensions in mm.
2. General tol. ±0.1 mm.

* For details of the component, see separate data sheet and/or package drawing.

Projection

© Zarlink Semiconductor 2002. All rights reserved.

ISSUE	1			
ACN	101514 rev1			
DATE	17-NOV-03			
APPRD.	PD\US			

ZARLINK SEMICONDUCTOR

Previous package codes

Package code TD

Drawing type
TO-56 Package Outline in ST Connector housing

Title 101514



For more information about all Zarlink products
visit our Web Site at

www.zarlink.com

Information relating to products and services furnished herein by Zarlink Semiconductor Inc. or its subsidiaries (collectively "Zarlink") is believed to be reliable. However, Zarlink assumes no liability for errors that may appear in this publication, or for liability otherwise arising from the application or use of any such information, product or service or for any infringement of patents or other intellectual property rights owned by third parties which may result from such application or use. Neither the supply of such information or purchase of product or service conveys any license, either express or implied, under patents or other intellectual property rights owned by Zarlink or licensed from third parties by Zarlink, whatsoever. Purchasers of products are also hereby notified that the use of product in certain ways or in combination with Zarlink, or non-Zarlink furnished goods or services may infringe patents or other intellectual property rights owned by Zarlink.

This publication is issued to provide information only and (unless agreed by Zarlink in writing) may not be used, applied or reproduced for any purpose nor form part of any order or contract nor to be regarded as a representation relating to the products or services concerned. The products, their specifications, services and other information appearing in this publication are subject to change by Zarlink without notice. No warranty or guarantee express or implied is made regarding the capability, performance or suitability of any product or service. Information concerning possible methods of use is provided as a guide only and does not constitute any guarantee that such methods of use will be satisfactory in a specific piece of equipment. It is the user's responsibility to fully determine the performance and suitability of any equipment using such information and to ensure that any publication or data used is up to date and has not been superseded. Manufacturing does not necessarily include testing of all functions or parameters. These products are not suitable for use in any medical products whose failure to perform may result in significant injury or death to the user. All products and materials are sold and services provided subject to Zarlink's conditions of sale which are available on request.

Purchase of Zarlink's I^2C components conveys a licence under the Philips I^2C Patent rights to use these components in and I^2C System, provided that the system conforms to the I^2C Standard Specification as defined by Philips.

Zarlink, ZL and the Zarlink Semiconductor logo are trademarks of Zarlink Semiconductor Inc.

Copyright Zarlink Semiconductor Inc. All Rights Reserved.

TECHNICAL DOCUMENTATION - NOT FOR RESALE