ZL30121
SONET/SDH
Low Jitter System Synchronizer
Data Sheet

May 2006

A full Design Manual is available to qualified customers. To register, please send an email to TimingandSync@Zarlink.com.

Features

- Supports the requirements of Telcordia GR-253 and GR-1244 for Stratum 3, 4E, 4 and SMC clocks, and the requirements of ITU-T G.781 SETS, G.813 SEC, G.823, G.824 and G.825 clocks
- Internal APLL provides standard output clock frequencies up to 622.08 MHz with jitter < 3 ps RMS suitable for GR-253-CORE OC-12 and G.813 STM-16 interfaces
- Programmable output synthesizers generate clock frequencies from any multiple of 8 kHz up to 77.76 MHz in addition to 2 kHz
- Provides two DPLLs which are independently configurable through a serial software interface
- DPLL1 provides all the features necessary for generating SONET/SDH compliant clocks including automatic hitless reference switching, automatic mode selection (locked, free-run, holdover), selectable loop bandwidth and pull-in range
- DPLL2 provides a comprehensive set of features necessary for generating derived output clocks and other general purpose clocks

Ordering Information

ZL30121GGG	100 Pin CABGA	Trays
ZL30121GGG2	100 Pin CABGA*	Trays

*Pb Free Tin/Silver/Copper

-40°C to +85°C

- Provides 8 reference inputs which support clock frequencies with any multiples of 8 kHz up to 77.76 MHz in addition to 2 kHz
- Supports master/slave configuration for AdvancedTCA™
- Configurable input to output delay and output to output phase alignment
- Optional external feedback path provides dynamic input to output delay compensation
- Provides 3 sync inputs for output frame pulse alignment
- Generates several styles of output frame pulses with selectable pulse width, polarity and frequency
- Flexible input reference monitoring automatically disqualifies references based on frequency and phase irregularities
- Supports IEEE 1149.1 JTAG Boundary Scan

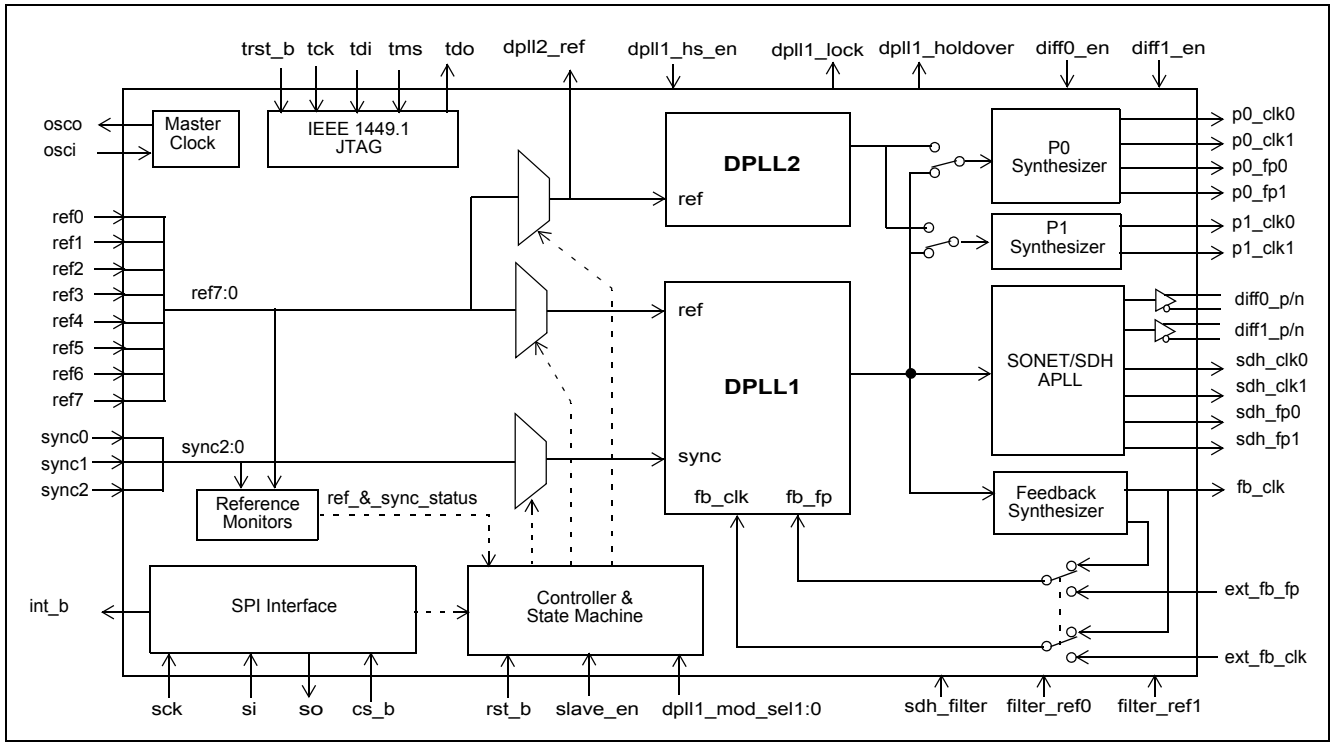

Figure 1 - Block Diagram

Zarlink Semiconductor Inc.
Zarlink, ZL and the Zarlink Semiconductor logo are trademarks of Zarlink Semiconductor Inc.
Copyright 2006, Zarlink Semiconductor Inc. All Rights Reserved.

Applications

- AdvancedTCA™ Systems
- Multi-Service Edge Switches or Routers
- Multi-Service Provisioning Platforms (MSPPs)
- Add-Drop Multiplexers (ADMs)
- Wireless/Wireline Gateways
- Wireless Base Stations
- DSLAM / Next Gen DLC
- Core Routers

Table of Contents

1.0 Functional Description 11
1.1 DPLL Features 11
1.2 DPLL Mode Control 12
1.3 Ref and Sync Inputs 13
1.4 Ref and Sync Monitoring 15
1.5 Output Clocks and Frame Pulses 16
1.6 Configurable Input-to-Output and Output-to-Output Delays 18
1.7 Master/Slave Configuration 19
1.8 External Feedback Inputs 20
2.0 Software Configuration 21
3.0 References 28

List of Figures

Figure 1 - Block Diagram 1
Figure 2 - Automatic Mode State Machine 12
Figure 3 - Reference and Sync Inputs 13
Figure 4 - Output Frame Pulse Alignment 14
Figure 5 - Behaviour of the Guard Soak Timer during CFM or SCM Failures 15
Figure 6 - Output Clock Configuration 16
Figure 7 - Phase Delay Adjustments 18
Figure 8 - Typical Master/Slave Configuration 19
Figure 9 - External Feedback Configuration 20

List of Tables

Table 1 - DPLL1 and DPLL2 Features 11
Table 2 - Set of Pre-Defined Auto-Detect Clock Frequencies 13
Table 3 - Set of Pre-Defined Auto-Detect Sync Frequencies 14
Table 4 - Output Clock and Frame Pulse Frequencies 17
Table 5 - Register Map 21

Pin Description

Pin #	Name	I/O Type	Description
Input Reference			
C1 B2 A3 C3 B3 B4 C4 A4	ref0 ref1 ref2 ref3 ref4 ref5 ref6 ref7	I_d	**Input References (LVCMOS, Schmitt Trigger).** These are input references available to both DPLL1 and DPLL2 for synchronizing output clocks. All eight input references can be automatically or manually selected using software registers. These pins are internally pulled down to Vss.
B1 A1 A2	sync0 sync1 sync2	I_d	**Frame Pulse Synchronization References (LVCMOS, Schmitt Trigger).** These are the frame pulse synchronization inputs associated with input references 0, 1 and 2. These inputs accept frame pulses in a clock format (50% duty cycle) or a basic frame pulse format with minimum pulse width of 5 ns. These pins are internally pulled down to $V_{ss.}$
C5	ext_fb_clk	I_d	**External DPLL Feedback Clock (LVCMOS, Schmitt Trigger).** External feedback clock input. This allows DPLL1 to adjust for PCB trace propagation delays. This pin is internally pulled down to Vss. Leave open when not is use.
B5	ext_fb_fp	I_d	**External DPLL Feedback Frame Pulse (LVCMOS, Schmitt Trigger).** External feedback frame pulse input. This allows DPLL1 to adjust for PCB trace propagation delays. This pin is internally pulled down to Vss. Leave open when not is use.
Output Clocks and Frame Pulses			
D10	sdh_clk0	O	**SONET/SDH Output Clock 0 (LVCMOS).** This output can be configured to provide any one of the SONET/SDH clock outputs up to 77.76 MHz. The default frequency for this output is 77.76 MHz.
G10	sdh_clk1	O	**SONET/SDH Output Clock 1 (LVCMOS).** This output can be configured to provide any one of the SONET/SDH clock outputs up to 77.76 MHz. The default frequency for this output is 19.44 MHz.
E10	sdh_fp0	O	**SONET/SDH Output Frame Pulse 0 (LVCMOS).** This output can be configured to provide virtually any style of output frame pulse synchronized with an associated SONET/SDH family output clock. The default frequency for this frame pulse output is 8 kHz.
F10	sdh_fp1	O	**SONET/SDH Output Frame Pulse 1 (LVCMOS).** This output can be configured to provide virtually any style of output frame pulse synchronized with an associated SONET/SDH family output clock. The default frequency for this frame pulse output is 2 kHz.
K9	p0_clk0	O	**Programmable Synthesizer 0 - Output Clock 0 (LVCMOS).** This output can be configured to provide any frequency with a multiple of 8 kHz up to 77.76 MHz in addition to 2 kHz. The default frequency for this output is 2.048 MHz.
K7	p0_clk1	O	**Programmable Synthesizer 0 - Output Clock 1 (LVCMOS).** This is a programmable clock output configurable as a multiple or division of the p0_clk0 frequency within the range of 2 kHz to 77.76 MHz. The default frequency for this output is 8.192 MHz.

Pin #	Name	I/O Type	Description
K8	p0_fp0	O	**Programmable Synthesizer 0 - Output Frame Pulse 0 (LVCMOS).** This output can be configured to provide virtually any style of output frame pulse associated with the p0 clocks. The default frequency for this frame pulse output is 8 kHz.
J7	p0_fp1	O	**Programmable Synthesizer 0 - Output Frame Pulse 1 (LVCMOS).** This output can be configured to provide virtually any style of output frame pulse associated with the p0 clocks. The default frequency for this frame pulse output is 8 kHz
J10	p1_clk0	O	**Programmable Synthesizer 1 - Output Clock 0 (LVCMOS).** This output can be configured to provide any frequency with a multiple of 8 kHz up to 77.76 MHz in addition to 2 kHz. The default frequency for this output is 1.544 MHz (DS1).
K10	p1_clk1	O	**Programmable Synthesizer1 - Output Clock 1 (LVCMOS).** This is a programmable clock output configurable as a multiple or division of the p1_clk0 frequency within the range of 2 kHz to 77.76 MHz. The default frequency for this output is 3.088 MHz (2x DS1).
H10	fb_clk	O	**Feedback Clock (LVCMOS).** This output is a buffered copy of the feedback clock for DPLL1. The frequency of this output always equals the frequency of the selected reference.
E1	dpll2_ref	O	**DPLL2 Selected Output Reference (LVCMOS).** This is a buffered copy of the output of the reference selector for DPLL2. Switching between input reference clocks at this output is not hitless.
A9 B10	diff0_p diff0_n	O	**Differential Output Clock 0 (LVPECL).** This output can be configured to provide any one of the available SDH clocks. The default frequency for this clock output is 155.52 MHz
A10 B9	diff1_p diff1_n	O	**Differential Output Clock 1 (LVPECL).** This output can be configured to provide any one of the available SDH clocks. The default frequency for this clock output is 622.08 MHz clock
Control			
H5	rst_b	I	**Reset (LVCMOS, Schmitt Trigger).** A logic low at this input resets the device. To ensure proper operation, the device must be reset after power-up. Reset should be asserted for a minimum of 300 ns.
J5	dpll1_hs_en	I_u	**DPLL1 Hitless Switching Enable (LVCMOS, Schmitt Trigger).** A logic high at this input enables hitless reference switching. A logic low disables hitless reference switching and re-aligns DPLL1's output phase to the phase of the selected reference input. This feature can also be controlled through software registers. This pin is internally pulled up to Vdd.
C2 D2	dpll1_mod_sel0 dpll1_mod_sel1	I_u	**DPLL1 Mode Select 1:0 (LVCMOS, Schmitt Trigger).** During reset, the levels on these pins determine the default mode of operation for DPLL1 (Automatic, Normal, Holdover or Freerun). After reset, the mode of operation can be controlled directly with these pins, or by accessing the dpll1_modesel register (0x1F) through the serial interface. This pin is internally pulled up to Vdd.
D1	slave_en	I_u	**Master/Slave control (LVCMOS, Schmitt Trigger).** This pin selects the mode of operation for the device. If set high, slave mode is selected. If set low, master mode is selected. This feature can also be controlled through software registers. This pin is internally pulled up to Vdd.

Pin #	Name	I/O Type	Description
K1	diff0_en	I_u	**Differential Output 0 Enable (LVCMOS, Schmitt Trigger).** When set high, the differential LVPECL output 0 driver is enabled. When set low, the differential driver is tristated reducing power consumption. This pin is internally pulled up to Vdd.
D3	diff1_en	I_u	**Differential Output 1 Enable (LVCMOS, Schmitt Trigger).** When set high, the differential LVPECL output 1 driver is enabled. When set low, the differential driver is tristated reducing power consumption.This pin is internally pulled up to Vdd.
Status			
H1	dpll1_lock	O	**Lock Indicator (LVCMOS).** This is the lock indicator pin for DPLL1. This output goes high when DPLL1's output is frequency and phase locked to the input reference.
J1	dpll1_holdover	O	**Holdover Indicator (LVCMOS).** This pin goes high when DPLL1 enters the holdover mode.
Serial Interface			
E2	sck	I	**Clock for Serial Interface (LVCMOS).** Serial interface clock.
F1	si	I	**Serial Interface Input (LVCMOS).** Serial interface data input pin.
G1	so	O	**Serial Interface Output (LVCMOS).** Serial interface data output pin.
E3	cs_b	I_u	**Chip Select for Serial Interface (LVCMOS).** Serial interface chip select. This pin is internally pulled up to Vdd.
G2	int_b	O	**Interrupt Pin (LVCMOS).** Indicates a change of device status prompting the processor to read the enabled interrupt service registers (ISR). This pin is an open drain, active low and requires an external pulled up to VDD.
APLL Loop Filter			
A6	sdh_filter	A	**External Analog PLL Loop Filter terminal.**
B6	filter_ref0	A	**Analog PLL External Loop Filter Reference.**
C6	filter_ref1	A	**Analog PLL External Loop Filter Reference.**
JTAG and Test			
J4	tdo	O	**Test Serial Data Out (Output).** JTAG serial data is output on this pin on the falling edge of tck. This pin is held in high impedance state when JTAG scan is not enabled.
K2	tdi	I_u	**Test Serial Data In (Input).** JTAG serial test instructions and data are shifted in on this pin. This pin is internally pulled up to Vdd. If this pin is not used then it should be left unconnected.
H4	trst_b	I_u	**Test Reset (LVCMOS).** Asynchronously initializes the JTAG TAP controller by putting it in the Test-Logic-Reset state. This pin should be pulsed low on power-up to ensure that the device is in the normal functional state. This pin is internally pulled up to Vdd. If this pin is not used then it should be connected to GND.
K3	tck	I	**Test Clock (LVCMOS):** Provides the clock to the JTAG test logic. If this pin is not used then it should be pulled down to GND.

Pin #	Name	I/O Type	Description
J3	tms	I_u	**Test Mode Select (LVCMOS).** JTAG signal that controls the state transitions of the TAP controller. This pin is internally pulled up to V_{DD}. If this pin is not used then it should be left unconnected.
Master Clock			
K4	osci	I	**Oscillator Master Clock Input (LVCMOS).** This input accepts a 20 MHz reference from a clock oscillator (TCXO, OCXO). The stability and accuracy of the clock at this input determines the free-run accuracy and the long term holdover stability of the output clocks.
K5	osco	O	**Oscillator Master Clock Output (LVCMOS).** This pin must be left unconnected when the osci pin is connected to a clock oscillator.
Miscellaneous			
J2 H7 J6 G3	IC		**Internal Connection.** Connect to ground.
K6	IC		**Internal Connection.** Leave unconnected.
F2 F3	NC		**No Connection.** Leave unconnected.
Power and Ground			
D9 E4 G8 G9 J8 J9 H6 H8	V_{DD}	P P P P P P P P	**Positive Supply Voltage.** +3.3V_{DC} nominal.
E8 F4	V_{CORE}	P P	**Positive Supply Voltage.** +1.8V_{DC} nominal.
A5 A8 C10	AV_{DD}	P P P	**Positive Analog Supply Voltage.** +3.3V_{DC} nominal.
B7 B8 H2	AV_{CORE}	P P P	**Positive Analog Supply Voltage.** +1.8V_{DC} nominal.

Pin #	Name	I/O Type	Description
D4 D5 D6 D7 E5 E6 E7 F5 F6 F7 G4 G5 G6 G7 E9 F8 F9 H9	V_{SS}	G G G G G G G G G G G G G G G G G G	**Ground.** 0 Volts.
A7 C7 C8 C9 D8 H3	AV_{SS}	G G G G G G	**Analog Ground.** 0 Volts.

I - Input
I_d - Input, Internally pulled down
I_u - Input, Internally pulled up
O - Output
A - Analog
P - Power
G - Ground

1.0 Functional Description

The ZL30121 SONET/SDH System Synchronizer is a highly integrated device that provides the functionality required for synchronizing network equipment. It incorporates two independent DPLLs, each capable of locking to one of eight input references and provides a wide variety of synchronized output clocks and frame pulses.

1.1 DPLL Features

The ZL30121 provides two independently controlled Digital Phase-Locked Loops (DPLL1, DPLL2) for clock and/or frame pulse synchronization. Table 1 shows a feature summary for both DPLLs.

Feature	DPLL1	DPLL2
Modes of Operation	Free-run, Normal (locked), Holdover	Free-run, Normal (locked), Holdover
Loop Bandwidth	User selectable: 0.1 Hz, 1.7 Hz, 3.5 Hz, fast lock (7 Hz), 14 Hz, 28 Hz[1], or wideband[2] (890 Hz / 56 Hz / 14 Hz)	Fixed: 14 Hz
Phase Slope Limiting	User selectable: 885 ns/s, 7.5 μs/s, 61 μs/s, or unlimited	User selectable: 61 μs/s, or unlimited
Pull-in Range	User selectable: 12 ppm, 52 ppm, 83 ppm, 130 ppm	Fixed: 130 ppm
Holdover Parameters	Selectable Update Times: 26 ms, 1 s, 10 s, 60 s, and Selectable Holdover Post Filter BW: 18 mHz, 2.5 Hz, 10 Hz.	Fixed Update Time: 26 ms No Holdover Post Filtering
Holdover Frequency Accuracy	Better than 1 ppb (Stratum 3E) initial frequency offset. Frequency drift depends on the 20 MHz external oscillator.	Better than 50 ppb (Stratum 3) initial frequency offset. Frequency drift depends on the 20 MHz external oscillator.
Reference Inputs	Ref0 to Ref7	Ref0 to Ref7
Sync Inputs	Sync0, Sync1, Sync2	Sync inputs are not supported.
Input Ref Frequencies	2 kHz, N * 8 kHz up to 77.76 MHz	2 kHz, N * 8 kHz up to 77.76 MHz
Supported Sync Input Frequencies	166.67 Hz, 400 Hz, 1 kHz, 2 kHz, 8 kHz, 64 kHz.	Sync inputs are not supported.
Input Reference Selection/Switching	Automatic (based on programmable priority and revertiveness), or manual	Automatic (based on programmable priority and revertiveness), or manual
Hitless Ref Switching	Can be enabled or disabled	Can be enabled or disabled
Output Clocks	diff0_p/n, diff1_p/n, sdh_clk0, sdh_clk1, p0_clk0, p0_clk1, p1_clk0, p1_clk1, fb_clk.	p0_clk0, p0_clk1, p1_clk0, p1_clk1.
Output Frame Pulses	sdh_fp0, sdh_fp1, p0_fp0, p0_fp1 synchronized to active sync reference.	p0_fp0, p0_fp1 not synchronized to sync reference.
Supported Output Clock Frequencies	As listed in Table 4	As listed in Table 4 for p0_clk0, p0_clk1, p1_clk0, p1_clk1

Table 1 - DPLL1 and DPLL2 Features

Feature	DPLL1	DPLL2
Supported Output Frame Pulse Frequencies	As listed in Table 4	As listed in Table 4 for p0_fp0, p0_fp not synchronized to sync reference.
External Status Pin Indicators	Lock, Holdover	None

Table 1 - DPLL1 and DPLL2 Features

1. Limited to 14 Hz for 2 kHz references)
2. In the wideband mode, the loop bandwidth depends on the frequency of the reference input. For reference frequencies greater than 8 kHz, the loop bandwidth = 890 Hz. For reference frequencies equal to 8 kHz, the loop bandwidth = 56 Hz. The loop bandwidth is equal to 14 Hz for reference frequencies of 2 kHz.

1.2 DPLL Mode Control

Both DPLL1 and DPLL2 independently support three modes of operation - free-run, normal, and holdover. The mode of operation can be manually set or controlled by an automatic state machine as shown in Figure 2.

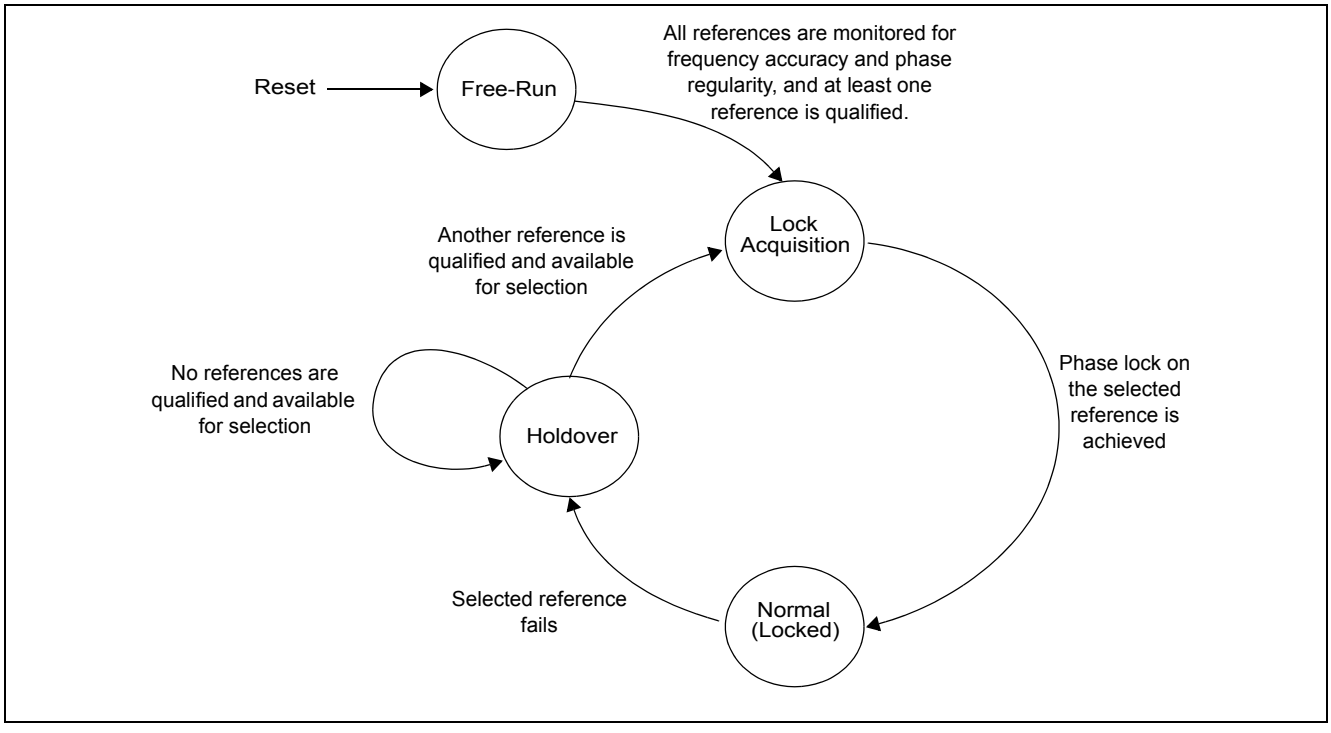

Figure 2 - Automatic Mode State Machine

Free-run

The free-run mode occurs immediately after a reset cycle or when the DPLL has never been synchronized to a reference input. In this mode, the frequency accuracy of the output clocks is equal to the frequency accuracy of the external master oscillator.

Lock Acquisition

The input references are continuously monitored for frequency accuracy and phase regularity. If at least one of the input references is qualified by the reference monitors, then the DPLL will begin lock acquisition on that input. Given a stable reference input, the ZL30121 will enter in the Normal (locked) mode.

Normal (locked)

The usual mode of operation for the DPLL is the normal mode where the DPLL phase locks to a selected qualified reference input and generates output clocks and frame pulses with a frequency accuracy equal to the frequency accuracy of the reference input. While in the normal mode, the DPLL's clock and frame pulse outputs comply with the MTIE and TDEV wander generation specifications as described in Telcordia and ITU-T telecommunication standards.

Holdover

When the DPLL operating in the normal mode loses its reference input, and no other qualified references are available, it will enter the holdover mode and continue to generate output clocks based on historical frequency data collected while the DPLL was synchronized. The transition between normal and holdover modes is controlled by the DPLL so that its initial frequency offset is better than 1 ppb which meets the requirement of Stratum 3E. The frequency drift after this transition period is dependant on the frequency drift of the external master oscillator.

1.3 Ref and Sync Inputs

There are eight reference clock inputs (**ref0** to **ref7**) available to both DPLL1 and DPLL2. The selected reference input is used to synchronize the output clocks. Each of the DPLLs have independent reference selectors which can be controlled using a built-in state machine or set in a manual mode.

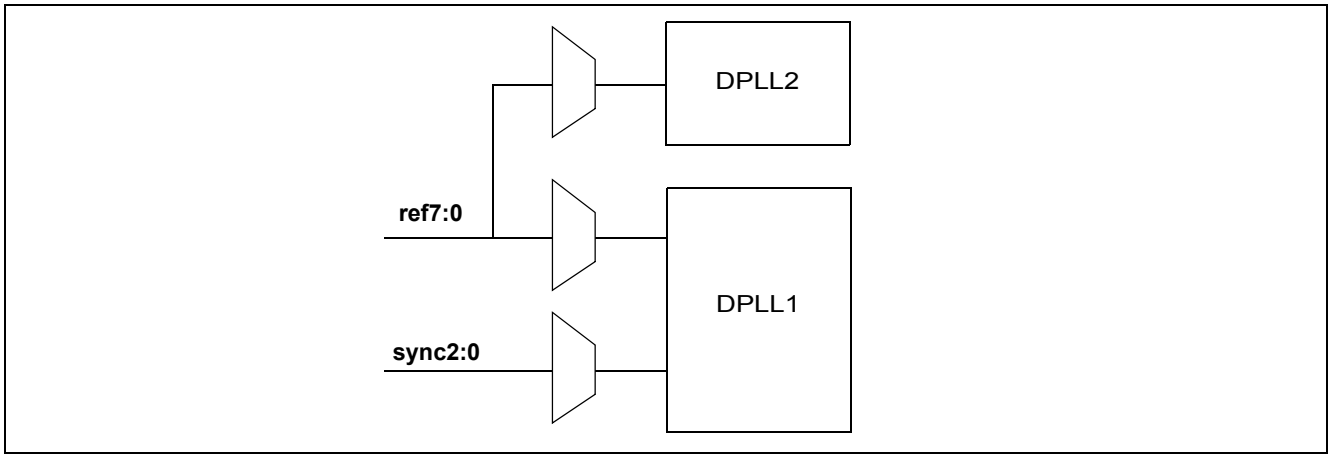

Figure 3 - Reference and Sync Inputs

Each of the **ref** inputs accept a single-ended LVCMOS clock with a frequency ranging from 2 kHz to 77.76 MHz. Built-in frequency detection circuitry automatically determines the frequency of the reference if its frequency is within the set of pre-defined frequencies as shown in Table 2. Custom frequencies definable in multiples of 8 kHz are also available.

2 kHz	16.384 MHz
8 kHz	19.44 MHz
64 kHz	38.88 MHz
1.544 MHz	77.76 MHz
2.048 MHz	
6.48 MHz	
8.192 MHz	

Table 2 - Set of Pre-Defined Auto-Detect Clock Frequencies

In addition to the reference inputs, DPLL1 has three optional frame pulse synchronization inputs (**sync0** to **sync2**) used to align the output frame pulses. The $sync_n$ input is selected with its corresponding ref_n input, where n = 0, 1, or 2. Note that the sync input cannot be used to synchronize the DPLL, it only determines the alignment of the frame pulse outputs. An example of output frame pulse alignment is shown in Figure 4.

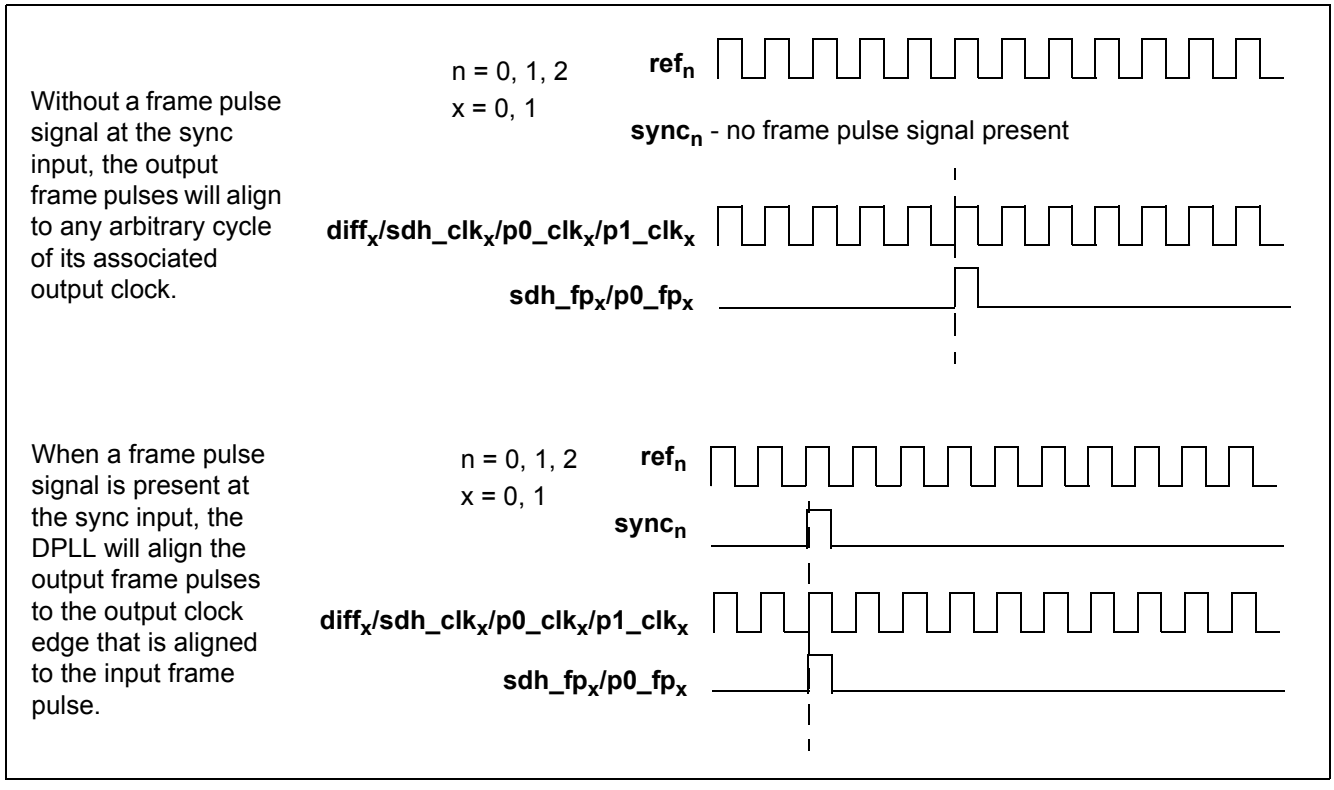

Figure 4 - Output Frame Pulse Alignment

Each of the **sync** inputs accept a single-ended LVCMOS frame pulse. Since alignment is determined from the rising edge of the frame pulse, there is no duty cycle restriction on this input, but there is a minimum pulse width requirement of 5 ns. Frequency detection for the sync inputs is automatic for the supported frame pulse frequencies shown in Table 3.

166.67 Hz (48x 125 μs frames)
400 Hz
1 kHz
2 kHz
8 kHz
64 kHz

Table 3 - Set of Pre-Defined Auto-Detect Sync Frequencies

1.4 Ref and Sync Monitoring

All input references (**ref0** to **ref7**) are monitored for frequency accuracy and phase regularity. New references are qualified before they can be selected as a synchronization source and qualified references are continuously monitored to ensure that they are suitable for synchronization. The process of qualifying a reference depends on four levels of monitoring.

Single Cycle Monitor (SCM)

The SCM block measures the period of each reference clock cycle to detect phase irregularities or a missing clock edge. In general, if the measured period deviates by more than 50% from the nominal period, then an SCM failure (scm_fail) is declared.

Coarse Frequency Monitor (CFM)

The CFM block monitors the reference frequency over a measurement period of 30 μs so that it can quickly detect large changes in frequency. A CFM failure (cfm_fail) is triggered when the frequency has changed by more than 3% or approximately 30000 ppm.

Precise Frequency Monitor (PFM)

The PFM block measures the frequency accuracy of the reference over a 10 second interval. To ensure an accurate frequency measurement, the PFM measurement interval is re-initiated if phase or frequency irregularities are detected by the SCM or CFM. The PFM provides a level of hysteresis between the acceptance range and the rejection range to prevent a failure indication from toggling between valid and invalid for references that are on the edge of the acceptance range.

When determining the frequency accuracy of the reference input, the PFM uses the external oscillator's output frequency (f_{ocsi}) as its point of reference.

Guard Soak Timer (GST)

The GST block mimics the operation of an analog integrator by accumulating failure events from the CFM and the SCM blocks and applying a selectable rate of decay when no failures are detected.

As shown in Figure 5, a GST failure (gst_fail) is triggered when the accumulated failures have reached the upper threshold during the disqualification observation window. When there are no CFM or SCM failures, the accumulator decrements until it reaches its lower threshold during the qualification window.

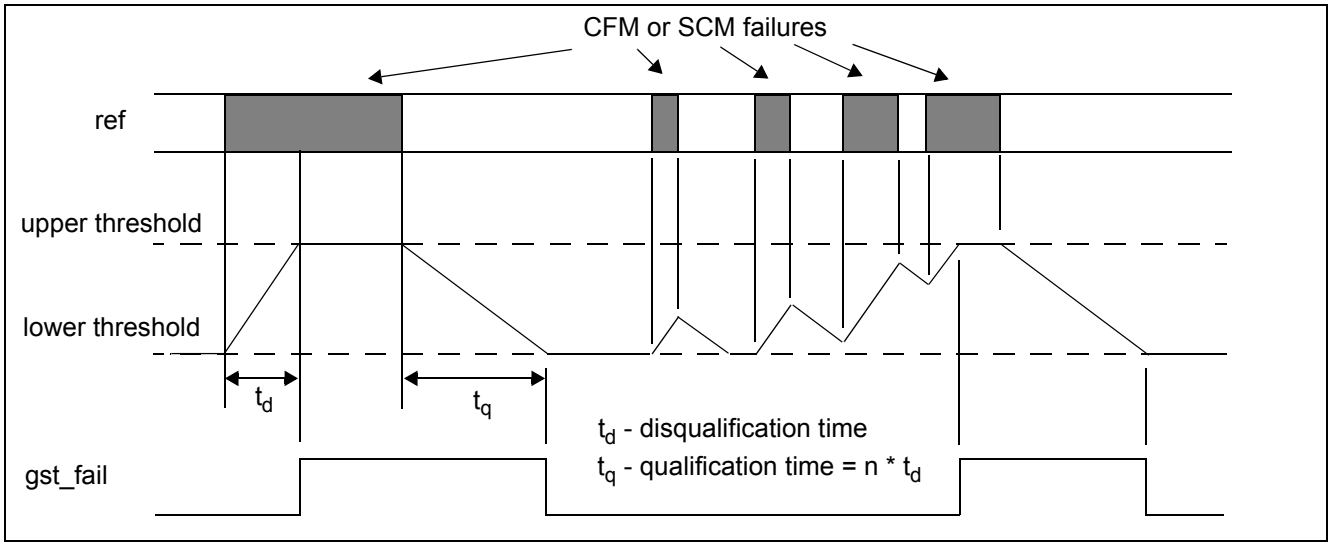

Figure 5 - Behaviour of the Guard Soak Timer during CFM or SCM Failures

All sync inputs (**sync0 to sync2**) are continuously monitored to ensure that there is a correct number of reference clock cycles within the frame pulse period.

1.5 Output Clocks and Frame Pulses

The ZL30121 offers a wide variety of outputs including two low-jitter differential LVPECL clocks (**diff0_p/n, diff1_p/n**), two SONET/SDH LVCMOS (**sdh_clk0, sdh_clk1**) output clocks, and four programmable LVCMOS (**p0_clk0, p0_clk1, p1_clk0, p1_clk1**) output clocks. In addition to the clock outputs, two LVCMOS SONET/SDH frame pulse outputs (**sdh_fp0, sdh_fp1**) and two LVCMOS programmable frame pulses (**p0_fp0, p0_fp1**) are also available.

The feedback clock (**fb_clk**) of DPLL1 is available as an output clock. Its output frequency is always equal to DPLL1's selected input frequency.

The output clocks and frame pulses derived from the SONET/SDH APLL are always synchronous with DPLL1, and the clocks and frame pulses generated from the programmable synthesizers can be synchronized to either DPLL1 or DPLL2. This allows the ZL30121 to have two independent timing paths.

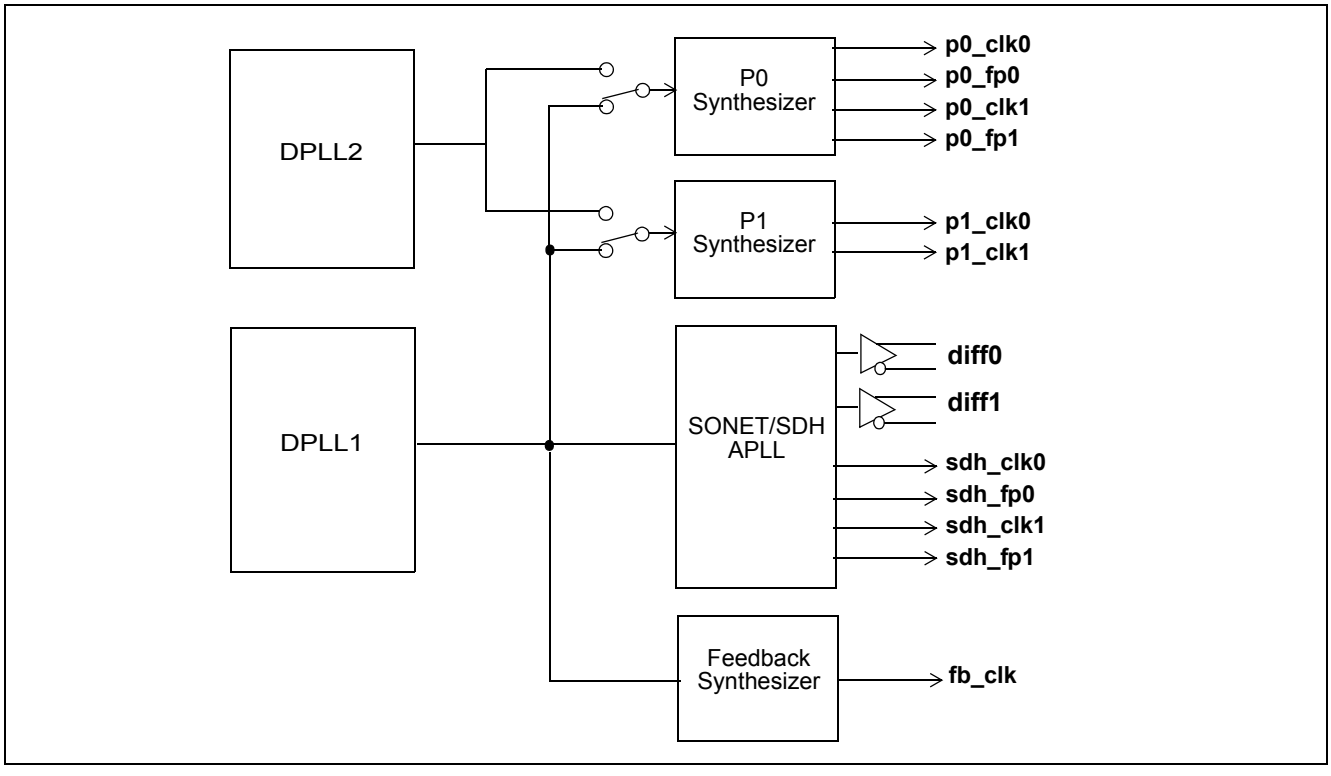

Figure 6 - Output Clock Configuration

The supported frequencies for the output clocks and frame pulses are shown in Table 4.

diff0_p/n, diff1_p/n (LVPECL)	sdh_clk0, sdh_clk1 (LVCMOS)	p0_clk0, p1_clk0 (LVCMOS)	p0_clk1, p1_clk1 (LVCMOS)	sdh_fp0, shd_fp1, p0_fp0, p0_fp1 (LVCMOS)
6.48 MHz	6.48 MHz	2 kHz	$p_x_clk1 = \frac{p_x_clk0}{2^M}$ (Up to 77.76 MHz)[1]	166.67 Hz (48x 125 μs frames)
19.44 MHz	9.72 MHz	N * 8 kHz (up to 77.76 MHz)[2]		400 Hz
38.88 MHz	12.96 MHz			1 kHz
51.84 MHz	19.44 MHz			2 kHz
77.76 MHz	25.92 MHz			4 kHz
155.52 MHz	38.88 MHz			8 kHz
311.04 MHz	51.84 MHz			32 kHz
622.08 MHz	77.76 MHz			64 kHz

Table 4 - Output Clock and Frame Pulse Frequencies

1. M= -128 to 127 defined as an 8-bit two's complement value. +ve values divide, -ve values multiply
2. N = 0 to 9270, N = 0 selects 2 kH

1.6 Configurable Input-to-Output and Output-to-Output Delays

The ZL30121 allows programmable static delay compensation for controlling input-to-output and output-to-output delays of its clocks and frame pulses.

All of the output synthesizers (SONET/SDH, P0, P1, Feedback) locked to DPLL1 can be configured to lead or lag the selected input reference clock using the **DPLL1 Fine Delay**. The delay is programmed in steps of 119.2 ps with a range of -128 to +127 steps giving a total delay adjustment in the range of -15.26 ns to +15.14 ns. Negative values delay the output clock, positive values advance the output clock. Synthesizers that are locked to DPLL2 are unaffected by this delay adjustment.

In addition to the fine delay introduced in the DPLL1 path, the SONET/SDH, P0, and P1 synthesizers have the ability to add their own fine delay adjustments using the **P0 Fine Delay**, **P1 Fine Delay**, and **SDH Fine Delay**. These delays are also programmable in steps of 119.2 ps with a range of -128 to +127 steps.

In addition to these delays, the single-ended output clocks of the SONET/SDH, P0, and P1 synthesizers can be independently offset by 90, 180 and 270 degrees using the **Coarse Delay**, and the SONET/SDH differential outputs can be independently delayed by -1.6 ns, 0 ns, +1.6 ns or +3.2 ns using the **Diff Delay**. The output frame pulses (SONET/SDH, P0) can be independently offset with respect to each other using the **FP Delay**.

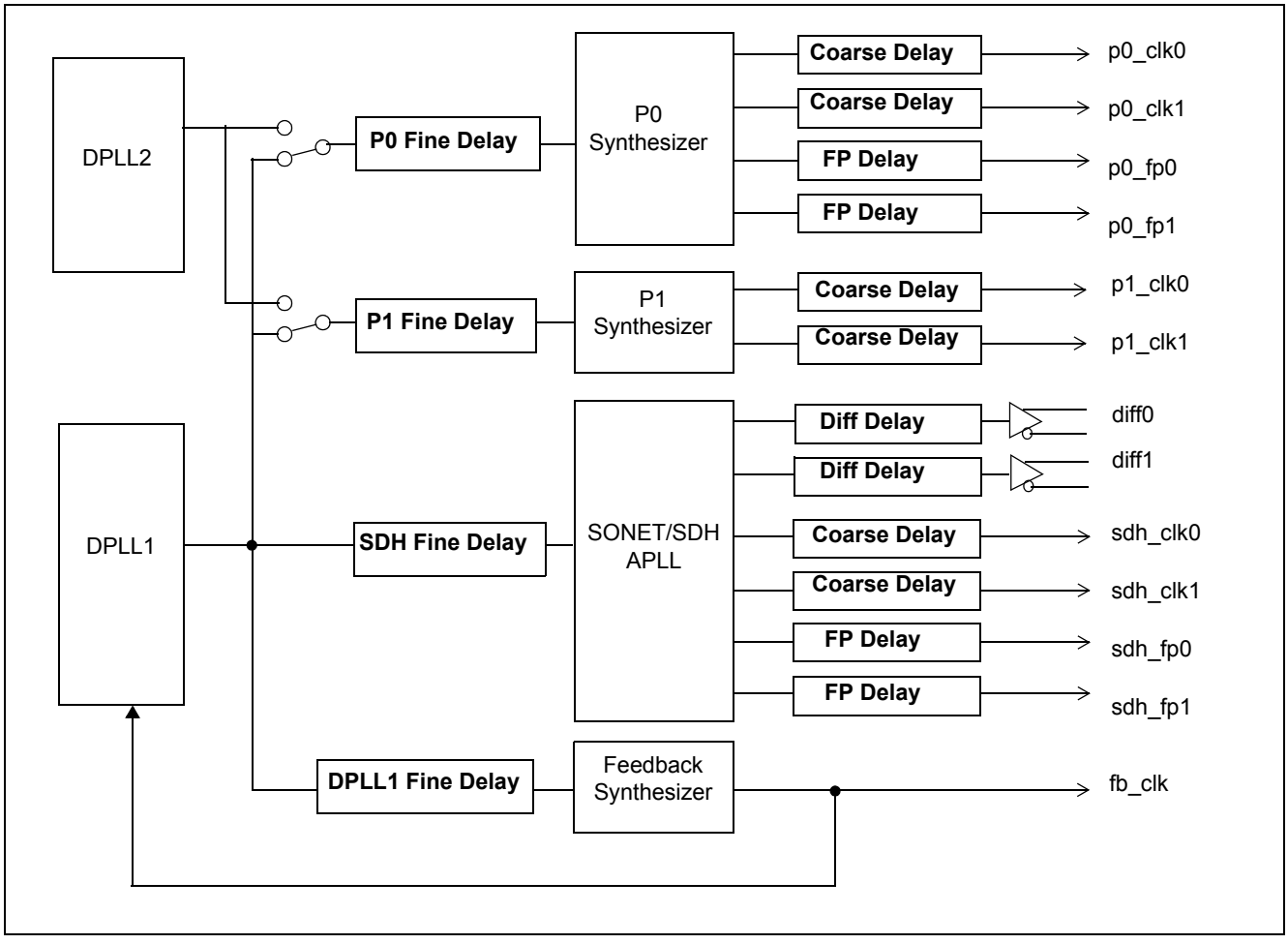

Figure 7 - Phase Delay Adjustments

1.7 Master/Slave Configuration

In systems that provide redundant timing sources, it is desirable to minimize the output skew between the master and the slave's output clocks. This can be achieved by synchronizing the slave to one of the master's output clocks instead of synchronizing the slave to an external reference. If frame pulse alignment between the timing sources is required, then the crossover link should consist of a clk/fp pair.

One method of connecting two ZL30121 devices in a master/slave configuration is shown in Figure 8 where there is a dedicated crossover link between timing cards. Any of the master's unused outputs and the slave's unused inputs can be used as a crossover link.

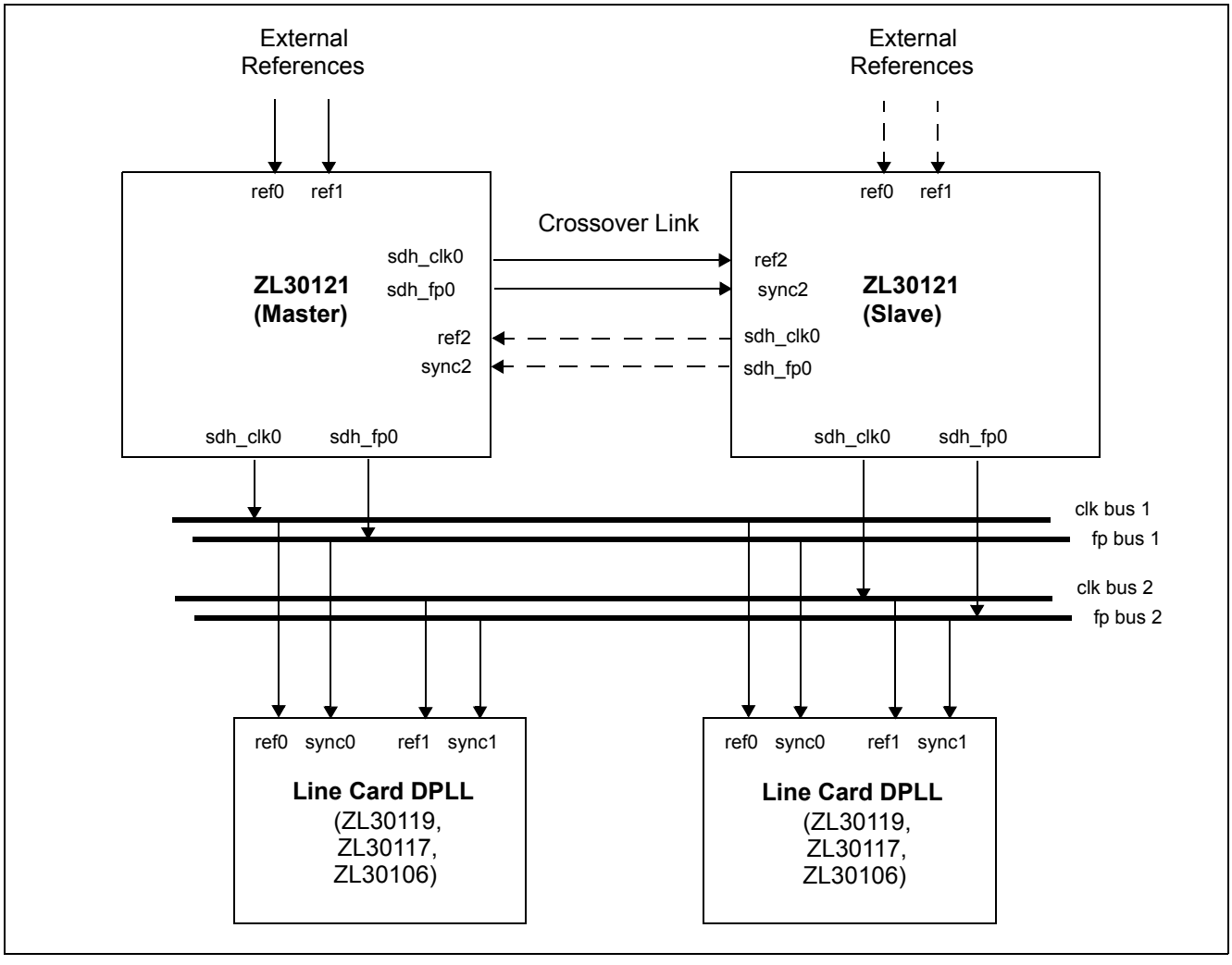

Figure 8 - Typical Master/Slave Configuration

1.8 External Feedback Inputs

In addition to the static delay compensation described in the “External Feedback Inputs” section on page 20, the ZL30121 also provides the option of dynamic delay compensation to minimize path delay variation associated with external clock drivers and long PCB traces. This is accomplished by re-directing the internal DPLL1 feedback path to external pins and closing the loop externally as shown in Figure 9.

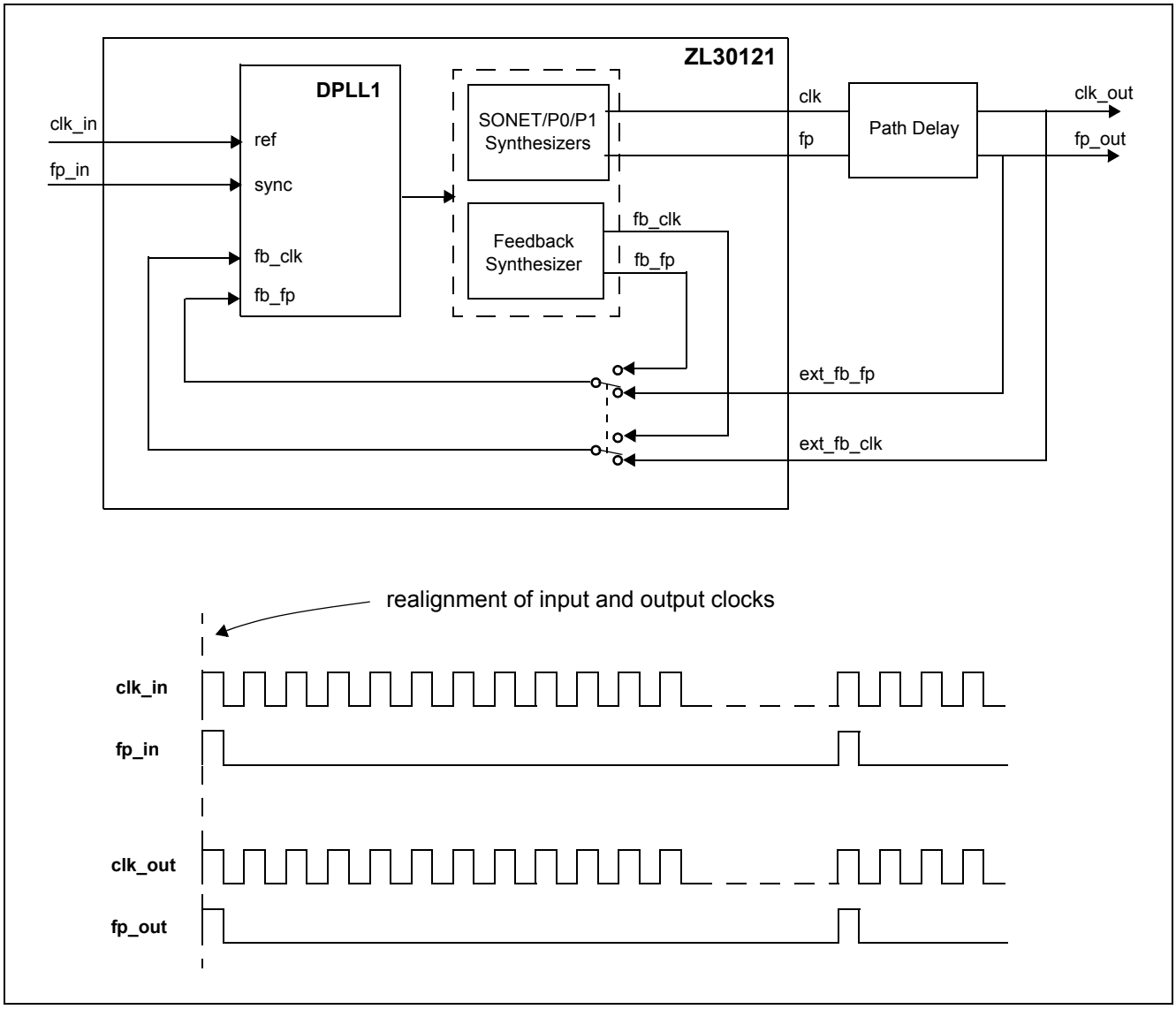

Figure 9 - External Feedback Configuration

2.0 Software Configuration

The ZL30121 is mainly controlled by accessing software registers through the serial peripheral interface (SPI). The device can be configured to operate in a highly automated manner which minimizes its interaction with the system's processor, or it can operate in a manual mode where the system processor controls most of the operation of the device.

The following table provides a summary of the registers available for status updates and configuration of the device.

Addr (Hex)	Register Name	Reset Value (Hex)	Description	Type
	Miscellaneous Registers			
00	id_reg	A5	Chip and version identification and reset ready indication register	R
01	use_hw_ctrl	00	Allows some functions of the device to be controlled by hardware pins	R/W
	Interrupts			
02	ref_fail_isr	FF	Reference failure interrupt service register	R
03	dpll1_isr	70	DPLL1 interrupt service register	Sticky R
04	dpll2_isr	00	DPLL2 interrupt service register	Sticky R
05	ref_mon_fail_0	FF	Ref0 and ref1 failure indications	Sticky R
06	ref_mon_fail_1	FF	Ref2 and ref3 failure indications.	Sticky R
07	ref_mon_fail_2	FF	Ref4 and ref5 failure indications	Sticky R
08	ref_mon_fail_3	FF	Ref6 and ref7 failure indications	Sticky R
09	ref_fail_isr_mask	00	Reference failure interrupt service register mask	R/W
0A	dpll1_isr_mask	00	DPLL1 interrupt service register mask	R/W
0B	dpll2_isr_mask	00	DPLL2 interrupt service register mask	R/W
0C	ref_mon_fail_mask_0	FF	Control register to mask each failure indicator for ref0 and ref1	R/W
0D	ref_mon_fail_mask_1	FF	Control register to mask each failure indicator for ref2 and ref3	R/W
0E	ref_mon_fail_mask_2	FF	Control register to mask each failure indicator for ref4 and ref5	R/W

Table 5 - Register Map

Addr (Hex)	Register Name	Reset Value (Hex)	Description	Type
0F	ref_mon_fail_mask_3	FF	Control register to mask each failure indicator for ref6 and ref7	R/W
	Reference Monitor Setup			
10	detected_ref_0	FF	Ref0 and ref1 auto-detected frequency value status register	R
11	detected_ref_1	FF	Ref2 and ref3 auto-detected frequency value status register	R
12	detected_ref_2	FF	Ref4 and ref5 auto-detected frequency value status register	R
13	detected_ref_3	FF	Ref6 and ref7 auto-detected frequency value status register	R
14	detected_sync_0	EE	Sync0 and sync1 auto-detected frequency value and sync failure status register	R
15	detected_sync_1	0E	Sync2 auto-detected frequency value and sync valid status register	R
16	oor_ctrl_0	33	Control register for the ref0 and ref1 out of range limit	R/W
17	oor_ctrl_1	33	Control register for the ref2 and ref3 out of range limit	R/W
18	oor_ctrl_2	33	Control register for the ref4 and ref5 out of range limit	R/W
19	oor_ctrl_3	33	Control register for the ref6 and ref7 out of range limit	R/W
1A	gst_mask_0	FF	Control register to mask the inputs to the guard soak timer for ref0 to ref3	R/W
1B	gst_mask_1	FF	Control register to mask the inputs to the guard soak timer for ref4 to ref7	R/W
1C	gst_qualif_time	1A	Control register for the guard_soak_timer qualification time and disqualification time for the references	R/W
	DPLL1 Control			
1D	dpll1_ctrl_0	See Register Description	Control register for the DPLL1 filter control; phase slope limit, bandwidth and hitless switching	R/W
1E	dpll1_ctrl_1	See Register Description	Holdover update time, filter_out_en, freq_offset_en, revert enable	R/W

Table 5 - Register Map (continued)

Addr (Hex)	Register Name	Reset Value (Hex)	Description	Type
1F	dpll1_modesel	See Register Description	Control register for the DPLL1 mode of operation	R/W
20	dpll1_refsel	00	DPLL1 reference selection or reference selection status	R/W
21	dpll1_ref_fail_mask	3C	Control register to mask each failure indicator (SCM, CFM, PFM and GST) used for automatic reference switching and automatic holdover	R/W
22	dpll1_wait_to_restore	00	Control register to indicate the time to restore a previous failed reference	R/W
23	dpll1_ref_rev_ctrl	00	Control register for the ref0 to ref7 enable revertive signals	R/W
24	dpll1_ref_pri_ctrl_0	10	Control register for the ref0 and ref1 priority values	R/W
25	dpll1_ref_pri_ctrl_1	32	Control register for the ref2 and ref3 priority values	R/W
26	dpll1_ref_pri_ctrl_2	54	Control register for the ref4 and re5 priority values	R/W
27	dpll1_ref_pri_ctrl_3	76	Control register for the ref6 and ref7 priority values	R/W
28	dpll1_lock_holdover_status	04	DPLL1 lock and holdover status register	R
29	dpll1_pullinrange	03	Control register for the pull-in range	R/W
	DPLL2 Control			
2A	dpll2_ctrl_0	00	Control register to program the DPLL2: hitless switching, the phase slope limit and DPLL enable	R/W
2B	dpll2_ctrl_1	04	Control register to program the DPLL2: filter_out_en, freq_offset_en, revert enable	R/W
2C	dpll2_modesel	02	Control register to select the mode of operation of the DPLL2	R/W
2D	dpll2_refsel	00	DPLL2 reference selection or reference selection status	R/W
2E	dpll2_ref_fail_mask	3C	Control register to mask each failure indicator (SCM, CFM, PFM and GST) used for automatic reference switching and automatic holdover	R/W
2F	dpll2_wait_to_restore	00	Control register to indicate the time to restore a previous failed reference for the DPLL2 path	R/W
30	dpll2_ref_rev_ctrl	00	Control register for the ref0 to ref7 enable revertive signals	R/W

Table 5 - Register Map (continued)

Addr (Hex)	Register Name	Reset Value (Hex)	Description	Type
31	dpll2_ref_pri_ctrl_0	10	Control register for the ref0 and ref1 priority values	R/W
32	dpll2_ref_pri_ctrl_1	32	Control register for the ref2 and ref3 priority values	R/W
33	dpll2_ref_pri_ctrl_2	54	Control register for the ref4 and re5 priority values	R/W
34	dpll2_ref_pri_ctrl_3	76	Control register for the ref6 and ref7 priority values	R/W
35	dpll2_lock_holdover_status	04	DPLL2 lock and holdover status register	R
	P0 Configuration Registers			
36	p0_enable	8F	Control register to enable p0_clk0, p0_clk1, p0_fp0, p0_fp1, the P0 synthesizer and select the source	R/W
37	p0_run	0F	Control register to generate p0_clk0, p0_clk1, p0_fp0 and p0_fp1	R/W
38	p0_freq_0	00	Control register for the [7:0] bits of the N of N*8k clk0	R/W
39	p0_freq_1	01	Control register for the [13:8] bits of the N of N*8k clk0	R/W
3A	p0_clk0_offset90	00	Control register for the p0_clk0 phase position coarse tuning	R/W
3B	p0_clk1_div	3E	Control register for the p0_clk1 frequency selection	R/W
3C	p0_clk1_offset90	00	Control register for the p0_clk1 phase position coarse tuning	R/W
3D	p0_offset_fine	00	Control register for the output/output phase alignment fine tuning for p0 path	R/W
3E	p0_fp0_freq	05	Control register to select the p0_fp0 frame pulse frequency	R/W
3F	p0_fp0_type	83	Control register to select fp0 type	R/W
40	p0_fp0_fine_offset_0	00	Bits [7:0] of the programmable frame pulse phase offset in multiples of 1/262.14 MHz	R/W
41	p0_fp0_fine_offset_1	00	Bits [15:8] of the programmable frame pulse phase offset in multiples of 1/262.14 MHz	R/W
42	p0_fp0_coarse_offset	00	Programmable frame pulse phase offset in multiples of 8 kHz cycles	R/W
43	p0_fp1_freq	05	Control register to select p0_fp1 frame pulse frequency	R/W

Table 5 - Register Map (continued)

Addr (Hex)	Register Name	Reset Value (Hex)	Description	Type
44	p0_fp1_type	11	Control register to select fp1 type	R/W
45	p0_fp1_fine_offset_0	00	Bits [7:0] of the programmable frame pulse phase offset in multiples of 1/262.144 MHz	R/W
46	p0_fp1_fine_offset_1	00	Bits [15:8] of the programmable frame pulse phase offset in multiples of 1/262.144 MHz	R/W
47	p0_fp1_coarse_offset	00	Programmable frame pulse phase offset in multiples of 8 kHz cycles	R/W
	P1 Configuration Registers			
48	p1_enable	83	Control register to enable p1_clk0, p1_clk1, the P1 synthesizer and select the source	R/W
49	p1_run	03	Control register to generate enable/disable p1_clk0 and p1_clk1	R/W
4A	p1_freq_0	C1	Control register for the [7:0] bits of the N of N*8k clk0	R/W
4B	p1_freq_1	00	Control register for the [13:8] bits of the N of N*8k clk0	R/W
4C	p1_clk0_offset90	00	Control register for the p1_clk0 phase position coarse tuning	R/W
4D	p1_clk1_div	3F	Control register for the p1_clk1 frequency selection	R/W
4E	p1_clk1_offset90	00	Control register for the p1_clk1 phase position coarse tuning	R/W
4F	p1_offset_fine	00	Control register for the output/output phase alignrment fine tuning	R/W
	SDH Configuration Registers			
50	sdh_enable	8F	Control register to enable sdh_clk0, sdh_clk1, sdh_fp0, sdh_fp1 and the SDH PLL	R/W
51	sdh_run	0F	Control register to generate sdh_clk0, sdh_clk1, sdh_fp0 and sdh_fp1	R/W
52	sdh_clk_div	42	Control register for the sdh_clk0 and sdh_clk1 frequency selection	R/W
53	sdh_clk0_offset90	00	Control register for the sdh_clk0 phase position coarse tuning	R/W
54	sdh_clk1_offset90	00	Control register for the sdh_clk1 phase position coarse tuning	R/W
55	sdh_offset_fine	00	Control register for the output/output phase alignrment fine tuning for sdh path	R/W

Table 5 - Register Map (continued)

Addr (Hex)	Register Name	Reset Value (Hex)	Description	Type
56	sdh_fp0_freq	05	Control register to select the sdh_fp0 frame pulse frequency	R/W
57	sdh_fp0_type	23	Control register to select fp0 type	R/W
58	sdh_fp0_fine_offset_0	00	Bits [7:0] of the programmable frame pulse phase offset in multiples of 1/311.04 MHz	R/W
59	sdh_fp0_fine_offset_1	00	Bits [15:8] of the programmable frame pulse phase offset in multiples of 1/311.04 MHz	R/W
5A	sdh_fp0_coarse_offset	00	Programmable frame pulse phase offset in multiples of 8 kHz cycles	R/W
5B	sdh_fp1_freq	03	Control register to select sdh_fp1 frame pulse frequency	R/W
5C	sdh_fp1_type	03	Control register to select fp1 type	R/W
5D	sdh_fp1_fine_offset_0	00	Bits [7:0] of the programmable frame pulse phase offset in multiples of 1/311.04 MHz	R/W
5E	sdh_fp1_fine_offset_1	00	Bits [15:8] of the programmable frame pulse phase offset in multiples of 1/311.04 MHz	R/W
5F	sdh_fp1_coarse_offset	00	Programmable frame pulse phase offset in multiples of 8 kHz cycles	R/W
	Differential Output Configuration			
60	diff_ctrl	A3	Control register to enable diff0, diff1	R/W
61	diff_sel	53	Control register to select the diff0 and diff1 frequencies	R/W
	External Feedback Configuration			
62	fb_control	80	Control register to enable fb_clk and the FB PLL, int/ext feedback select	R/W
63	fb_offset_fine	F5	Control register for the output/output phase alignment fine tuning	R/W
64	reserved			
N * 8 kHz Reference Control				
65	ref_freq_mode_0	00	Control register to set whether to use auto detect, CustomA or CustomB for ref0 to ref3	R/W
66	ref_freq_mode_1	00	Control register to set whether to use auto detect, CustomA or CustomB for ref4 to ref7	R/W
67	custA_mult_0	00	Control register for the [7:0] bits of the custom configuration A. This is the N integer for the N*8kHz reference monitoring.	R/W

Table 5 - Register Map (continued)

Addr (Hex)	Register Name	Reset Value (Hex)	Description	Type
68	custA_mult_1	00	Control register for the [13:8] bits of the custom configuration A. This is the N integer for the N*8kHz reference monitoring.	R/W
69	custA_scm_low	00	Control register for the custom configuration A: single cycle SCM low limiter	R/W
6A	custA_scm_high	00	Control register for the custom configuration A: single cycle SCM high limiter	R/W
6B	custA_cfm_low_0	00	Control register for the custom configuration A: The [7:0] bits of the single cycle CFM low limit	R/W
6C	custA_cfm_low_1	00	Control register for the custom configuration A: The [15:0] bits of the single cycle CFM low limit	R/W
6D	custA_cfm_hi_0	00	Control register for the custom configuration A: The [7:0] bits of the single cycle CFM high limit	R/W
6E	custA_cfm_hi_1	00	Control register for the custom configuration A: The [15:0] bits of the single cycle CFM high limiter	R/W
6F	custA_cfm_cycle	00	Control register for the custom configuration A: CFM reference monitoring cycles - 1	R/W
70	custA_div	00	Control register for the custom configuration A: enable the use of ref_div4 for the CFM and PFM inputs	R/W
71	custB_mult_0	00	Control register for the [7:0] bits of the custom configuration B. This is the 8 k integer for the N*8kHz reference monitoring.	R/W
72	custB_mult_1	00	Control register for the [13:8] bits of the custom configuration B. This is the 8 k integer for the N*8kHz reference monitoring.	R/W
73	custB_scm_low	00	Control register for the custom configuration B: single cycle SCM low limiter	R/W
74	custB_scm_high	00	Control register for the custom configuration B: single cycle SCM high limiter	R/W
75	custB_cfm_low_0	00	Control register for the custom configuration B: The [7:0] bits of the single cycle CFM low limiter.	R/W
76	custB_cfm_low_1	00	Control register for the custom configuration B: The [15:0] bits of the single cycle CFM low limiter.	R/W

Table 5 - Register Map (continued)

Addr (Hex)	Register Name	Reset Value (Hex)	Description	Type
77	custB_cfm_hi_0	00	Control register for the custom configuration B: The [7:0] bits of the single cycle CFM high limiter.	R/W
78	custB_cfm_hi_1	00	Control register for the custom configuration B: The [15:0] bits of the single cycle CFM high limiter.	R/W
79	custB_cfm_cycle	00	Control register for the custom configuration B: CFM reference monitoring cycles - 1	R/W
7A	custB_div	00	Control register for the custom configuration B: enable the use of ref_div4 for the CFM and PFM inputs	R/W
7B - 7F	Reserved			

Table 5 - Register Map (continued)

3.0 References

AdvancedTCA, ATCA and the AdvancedTCA and ATCA logos are trademarks of the PCI Industrial Computer Manufacturers Group.

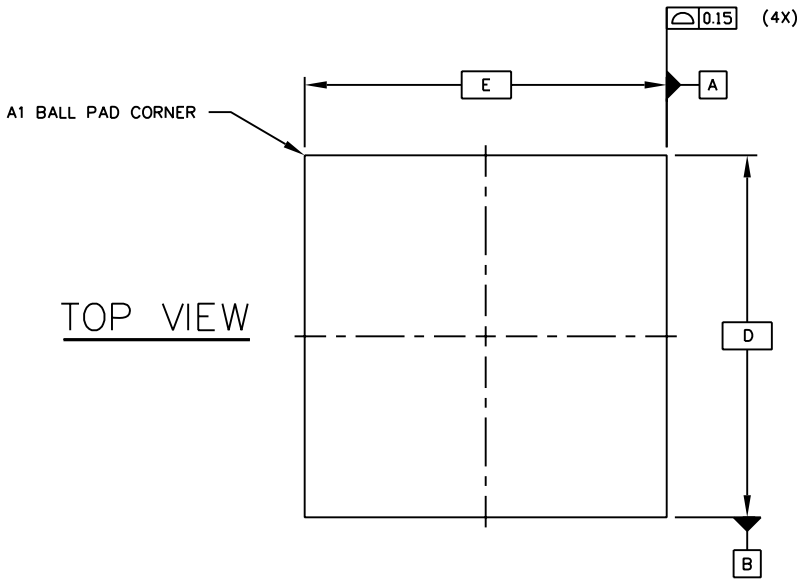

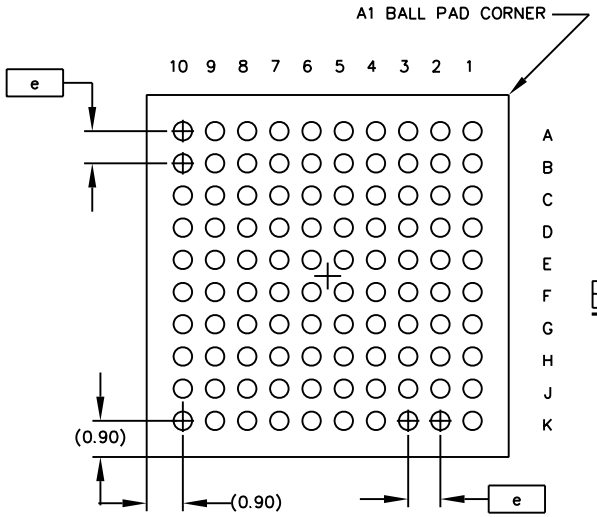

BOTTOM VIEW

100 SOLDER BALLS

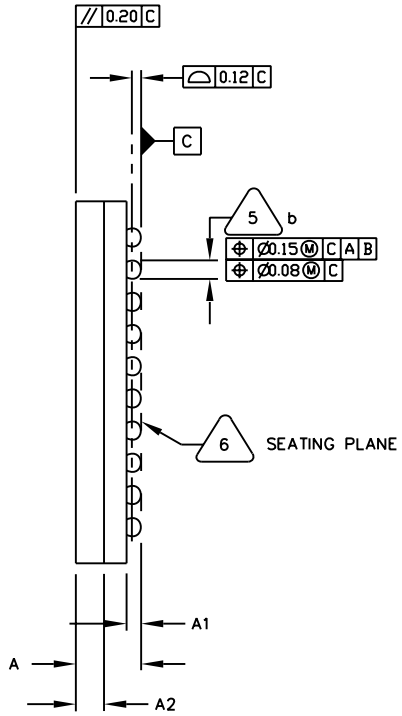

SIDE VIEW

SYMBOL	MILLIMETER		
	MIN	NOM	MAX
A	1.52	1.62	1.72
A1	0.31	0.36	0.41
A2	0.65	0.70	0.75
b		0.46 Typ.	
D	8.85	9.00	9.15
E	8.85	9.00	9.15
e		0.8 Ref	
n		100	

6. PRIMARY DATUM C AND SEATING PLANE ARE DEFINED BY THE SPHERICAL CROWNS OF THE SOLDER BALLS.

5. DIMENSION b IS MEASURED AT THE MAXIMUM SOLDER BALL DIAMETER, PARALLEL TO PRIMARY DATUM C.

4. THE MAXIMUM ALLOWABLE NUMBER OF SOLDER BALLS IS 100.

3. Not to Scale.

2. THE BASIC SOLDER BALL GRID PITCH IS 0.8mm.

1. ALL DIMENSIONS AND TOLERANCES CONFORM TO ASME Y14.5M–1994.

NOTES: UNLESS OTHERWISE SPECIFIED

© Zarlink Semiconductor 2006 All rights reserved.

ISSUE	1	2	3	
ACN	CDCA	CDCA	CDCA	
DATE	15April05	24Aug05	26Oct06	
APPRD.				

ZARLINK SEMICONDUCTOR

Previous package codes

N/A

Package Code GG

Package Outline for 100ball 9x9mm, 0.8 mm Pitch, 4 layer, CABGA

111040



For more information about all Zarlink products
visit our Web Site at

www.zarlink.com

Information relating to products and services furnished herein by Zarlink Semiconductor Inc. or its subsidiaries (collectively "Zarlink") is believed to be reliable. However, Zarlink assumes no liability for errors that may appear in this publication, or for liability otherwise arising from the application or use of any such information, product or service or for any infringement of patents or other intellectual property rights owned by third parties which may result from such application or use. Neither the supply of such information or purchase of product or service conveys any license, either express or implied, under patents or other intellectual property rights owned by Zarlink or licensed from third parties by Zarlink, whatsoever. Purchasers of products are also hereby notified that the use of product in certain ways or in combination with Zarlink, or non-Zarlink furnished goods or services may infringe patents or other intellectual property rights owned by Zarlink.

This publication is issued to provide information only and (unless agreed by Zarlink in writing) may not be used, applied or reproduced for any purpose nor form part of any order or contract nor to be regarded as a representation relating to the products or services concerned. The products, their specifications, services and other information appearing in this publication are subject to change by Zarlink without notice. No warranty or guarantee express or implied is made regarding the capability, performance or suitability of any product or service. Information concerning possible methods of use is provided as a guide only and does not constitute any guarantee that such methods of use will be satisfactory in a specific piece of equipment. It is the user's responsibility to fully determine the performance and suitability of any equipment using such information and to ensure that any publication or data used is up to date and has not been superseded. Manufacturing does not necessarily include testing of all functions or parameters. These products are not suitable for use in any medical products whose failure to perform may result in significant injury or death to the user. All products and materials are sold and services provided subject to Zarlink's conditions of sale which are available on request.

Purchase of Zarlink's I^2C components conveys a licence under the Philips I^2C Patent rights to use these components in and I^2C System, provided that the system conforms to the I^2C Standard Specification as defined by Philips.

Zarlink, ZL and the Zarlink Semiconductor logo are trademarks of Zarlink Semiconductor Inc.

Copyright Zarlink Semiconductor Inc. All Rights Reserved.

TECHNICAL DOCUMENTATION - NOT FOR RESALE