NOT RECOMMENDED FOR NEW DESIGNS
RECOMMENDED REPLACEMENT PARTS
ZL8101 and ZL6105

Adaptive Digital DC/DC Controller with Current Sharing

ZL2004-01

The ZL2004-01 is specialized version of the ZL2004 DC/DC controller that has been optimized for high output accuracy within a given set of operating conditions. The ZL2004-01 is otherwise identical to the ZL2004 in features and functionality. The ZL2004-01 has been optimized for use with the ZL1505 MOSFET driver and discrete MOSFETs.

The ZL2004-01 integrates a proprietary Digital-DC communication bus for current sharing and inter device communication. Adaptive algorithms improve light load efficiency. All operating features can be configured by simple pin-strap selection, resistor selection or through the on-board serial port. The PMBus™-compliant ZL2004-01 uses the SMBus™ serial interface for communication with other Digital-DC products or a host controller.

Related Literature

- See FN6846, ZL2004 “Adaptive Digital DC-DC Controller with Current Sharing”

Features

- Power Conversion
- Efficient synchronous buck controller
- ± 0.2% VOUT set-point accuracy
- 8.0V to 10.0V input range
- 0.9V to 1.1V output range
- Adaptive performance optimization algorithms
- Fast load transient response
- Active current sharing
- DCR current sensing with digitally adjustable current sense range
- RoHS compliant (5mmx5mm) QFN package
- Power Management
- Digital soft-start/stop
- Precision delay and ramp-up
- Power-good/enable
- Voltage tracking, sequencing and margining
- Voltage/current/temperature monitoring
- SMBus communication (PMBus compliant)
- Output voltage and current protection
- Internal non-volatile memory (NVM)

Applications

- Servers/storage equipment
- Telecom/datacom equipment
- Power supplies (memory, DSP, ASIC, FPGA)

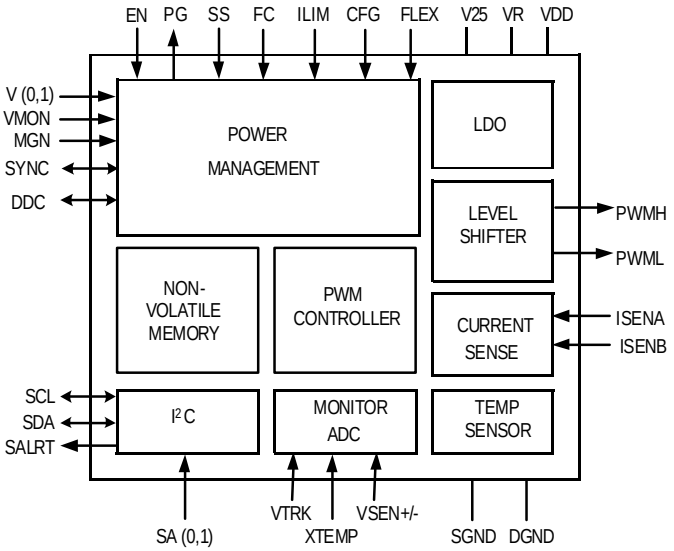

FIGURE 1. BLOCK DIAGRAM

CAUTION: These devices are sensitive to electrostatic discharge; follow proper IC Handling Procedures.
1-888-INTERSIL or 1-888-468-3774 | Copyright Intersil Americas Inc. 2009-2011. All Rights Reserved
Intersil (and design) is a trademark owned by Intersil Corporation or one of its subsidiaries.
All other trademarks mentioned are the property of their respective owners.

Ordering Information

PART NUMBER (Notes 1, 4)	PART MARKING	TEMP RANGE (°C)	SHIPPING CONTAINER	PACKAGE Tape & Reel (Pb-free)	PKG. DWG. #
ZL2004ALNN-01 (Note 2)	2004-01	0 to +65	490 pieces	32 Ld QFN	L32.5x5D
ZL2004ALNNT-01 (Note 2)	2004-01	0 to +65	100 pieces	32 Ld QFN	L32.5x5D
ZL2004ALNNT1-01 (Note 2)	2004-01	0 to +65	1000 pieces	32 Ld QFN	L32.5x5D
ZL2004ALNF-01 (Note 3)	2004-01	0 to +65	490 pieces	32 Ld QFN	L32.5x5G
ZL2004ALNFT-01 (Note 3)	2004-01	0 to +65	100 pieces	32 Ld QFN	L32.5x5G
ZL2004ALNFT1-01 (Note 3)	2004-01	0 to +65	1000 pieces	32 Ld QFN	L32.5x5G

NOTES:

1. Please refer to TB347 for details on reel specifications.
2. These Intersil Pb-free plastic packaged products employ special Pb-free material sets; molding compounds/die attach materials and NiPdAu plate - e4 termination finish, which is RoHS compliant and compatible with both SnPb and Pb-free soldering operations. Intersil Pb-free products are MSL classified at Pb-free peak reflow temperatures that meet or exceed the Pb-free requirements of IPC/JEDEC J STD-020.
3. These Intersil Pb-free plastic packaged products employ special Pb-free material sets, molding compounds/die attach materials, and 100% matte tin plate plus anneal (e3 termination finish, which is RoHS compliant and compatible with both SnPb and Pb-free soldering operations). Intersil Pb-free products are MSL classified at Pb-free peak reflow temperatures that meet or exceed the Pb-free requirements of IPC/JEDEC J STD-020.
4. For Moisture Sensitivity Level (MSL), please see device information page for ZL2004-01. For more information on MSL please see techbrief TB363.

Pin Configuration

ZL2004-01
(32 LD QFN)
TOP VIEW

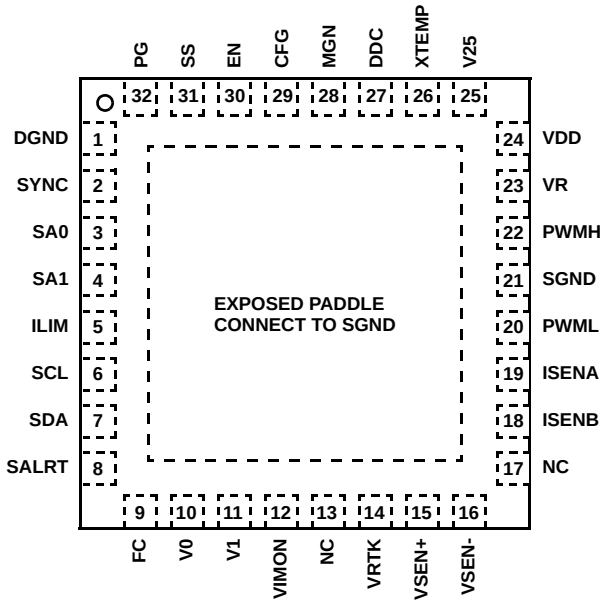

Pin Descriptions

PIN	SYMBOL	TYPE (Note 5)	DESCRIPTION
1	DGND	PWR	Digital ground. Connect to low impedance ground plane.
2	SYNC	I/O, M (Note 6)	Clock synchronization input. Used to set the frequency of the internal switch clock, to sync to an external clock or to output internal clock.
3	SA0	I, M	Serial address select pins. Used to assign unique address for each individual device or to enable certain management features.
4	SA1		
5	ILIM	I, M	Current limit select. Sets the overcurrent threshold voltage for ISENA, ISENB.
6	SCL	I/O	Serial clock. Connect to external host and/or to other ZL devices.
7	SDA	I/O	Serial data. Connect to external host and/or to other ZL devices.
8	SALRT	O	Serial alert. Connect to external host if desired.
9	FC	I	Loop compensation selection pin.
10	V0	I, M	Output voltage selection pins. Used to set V_{OUT} set-point and V_{OUT} max.
11	V1		
12	VMON	I, M	External voltage monitoring (Can be used for external driver bias monitoring for Power-good).
13, 17	NC		No Connect.
14	VTRK	I	Tracking sense input. Used to track an external voltage source.
15	VSEN+	I	Differential Output voltage sense feedback. Connect to positive output regulation point.
16	VSEN-	I	Differential Output voltage sense feedback. Connect to negative output regulation point.
18	ISENB	I	Differential voltage input for current sensing.
19	ISENA	I	Differential voltage input for current sensing. High voltage (DCR).
20	PWML	O	PWM Gate low signal.
21	SGND	PWR	Connect to low impedance ground plane. Internal connection to SGND.
22	PWMH	O	PWM Gate High signal.
23	VR	PWR	Internal 5V reference used to power internal drivers.
24	VDD (Note 7)	PWR	Supply voltage.
25	V25	PWR	Internal 2.5V reference used to power internal circuitry.
26	XTEMP	I	External temperature sensor input. Connect to external 2N3904 (Base Emitter junction).
27	DDC	I	Single wire DDC bus (Current sharing, interdevice communication).
28	MGN	I	V_{OUT} margin control.
29	CFG	M	Configuration pin. Used to control the switching phase offset, sequencing and other management features.
30	EN	I	Enable. Active signal enables PWM switching.
31	SS	I, M	Soft-start delay and ramp select. Sets the delay from when EN is asserted until the output voltage starts to ramp and the ramp time.
32	PG	O	Power-good output.
EPAD	SGND	PWR	Exposed thermal pad. Connect to low impedance ground plane. Internal connection to SGND.

NOTES:

5. I = Input, O = Output, PWR = Power or Ground. M = Multi-mode pins.
6. The SYNC pin can be used as a logic pin, a clock input or a clock output.
7. V_{DD} is measured internally and the value is used to modify the PWM loop gain.

Absolute Maximum Ratings (Note 8)

DC Supply Voltage (VDD) . . . . . -0.3V to 17V
Logic I/O Voltage
  CFG, DDC, EN, FC, FLEX, ILIM, MGN, PG, SA (0,1)
  SALRT, SCL, SDA, SS, SYNC, VMON, V (0,1) . . . . . -0.3V to 6.5V
Analog Input Voltages
  VSEN+, VSEN-, VTRK, XTEMP . . . . . -0.3V to 6.5V
  ISENA, ISENB . . . . . -1.5V to 6.5V
MOSFET Drive Reference (VR). . . . . -0.3V to 6.5V
Logic reference (V25). . . . . -0.3V to 3V
Ground Voltage Differential (V_{DGND}- V_{SGND})
  DGND, SGND . . . . . -0.3V to +0.3V

Thermal Information

Thermal Resistance (Typical)	θ_{JA} (°C/W)	θ_{JC} (°C/W)
32 Ld QFN Package (Notes 9, 10)	35	5

Junction Temperature . . . . . -55°C to +150°C
Storage Temperature Range. . . . . -55°C to +150°C
Pb-Free Reflow Profile . . . . . see link below
http://www.intersil.com/pbfree/Pb-FreeReflow.asp

Recommended Operating Conditions

Input Supply Voltage Range, (V_{DD}). . . . . 8V to 10V
Output Voltage Range (V_{OUT}) . . . . . 0.9V to 1.1V, 1.0V (Typ)
Operating Frequency (F_{SW}) . . . . . 400kHz Typ
Operating Ambient Temperature . . . . . 0°C to +65°C

CAUTION: Do not operate at or near the maximum ratings listed for extended periods of time. Exposure to such conditions may adversely impact product reliability and result in failures not covered by warranty.

NOTES:

8. All voltages are measured with respect to SGND.
9. θ_{JA} is measured in free air with the component mounted on a high effective thermal conductivity test board with “direct attach” features. See Tech Brief TB379.
10. For θ_{JC}, the “case temp” location is the center of the exposed metal pad on the package underside.

Electrical Specifications

V_{DD} = 8.6 V, V_{OUT} = 1.0 V, T_A = 0°C to +65°C unless otherwise noted. Typical values are at T_A = +25°C. The following specifications describe the ZL2004-01 electrical specifications that differ from the ZL2004. Please refer to the ZL2004 data sheet for the full operating specification limits for the remaining functions not described herein. **Boldface limits apply over the operating temperature range, 0°C to +65°C.**

PARAMETER	CONDITIONS	MIN (Note 11)	TYP	MAX (Note 11)	UNIT
INPUT AND SUPPLY CHARACTERISTICS					
I_{DD} Supply Current at F_{SW} = 400kHz	GH no load, GL no load, MISC_CONFIG[7] = 1	–	16	**30**	mA
I_{DDS} Shutdown Current	EN = 0V No I^2C/SMBus activity	–	2	**5**	mA
VR Reference Output Voltage	V_{DD} > 6V, I_{VR} < 50mA	**4.5**	5.2	**5.7**	V
V25 Reference Output Voltage	V_R > 3V, I_{V25} < 50mA	**2.25**	2.5	**2.75**	V
OUTPUT CHARACTERISTICS					
Output Voltage Adjustment Range	V_{IN} > V_{OUT}	**0.9**	–	**1.1**	V
Output Voltage Setpoint Accuracy (Note 12)	V_{IN} = 8.6V, V_{OUT} = 1V T_A = 0°C to + 65°C, I_{LOAD} = 0A to 40A	**-0.2**	–	**0.2**	%
PMBus READ_VOUT Accuracy		**-1.0**	-	**1.0**	%
OSCILLATOR AND SWITCHING CHARACTERISTICS					
Switching Frequency (Note 13)	SYNC pin floating or NVM configured for 400kHz	–	400	–	kHz
Switching Frequency Set-point Accuracy		**-5**	–	**5**	%
FAULT PROTECTION CHARACTERISTICS					
UVLO Threshold Range	Configurable via I^2C/SMBus	**2.85**	–	**16**	V

NOTES:

11. Compliance to datasheet limits is assured by one or more methods: production test, characterization and/or design.
12. V_{OUT} set-point measured at the termination of the VSEN+ and VSEN- sense points.
13. The ZL2004-01 has been optimized for operation at 400kHz only. Please consult the factory for requirements at other operating frequencies.

Revision History

The revision history provided is for informational purposes only and is believed to be accurate, but not warranted. Please go to web to make sure you have the latest Rev.

DATE	REVISION	CHANGE
5/11/11	FN6847.2	On page 1: Added “Related Literature” On page 2: Added following parts to “Ordering Information”: ZL2004ALNN-01 ZL2004ALNF-01 ZL2004ALNFT-01 ZL2004ALNFT1-01 Added lead finish Note 3 for ALNF parts. On page 4: Updated note in Min Max column of “Electrical Specifications” table from "Parameters with MIN and/or MAX limits are 100% tested at +25°C, unless otherwise specified. Temperature limits established by characterization and are not production tested." to "Compliance to datasheet limits is assured by one or more methods: production test, characterization and/or design." On page 7: Added “Package Outline Drawing” L32.5x5G for ALNF parts.
4/9/10	FN6847.1	On page 4, changed max value from 5.5 to 5.7 for “VR Reference Output Voltage”.
3/23/10		Converted to New Intersil Template. Added spec to existing parameter on the device in Electrical Specifications Table “Output Characteristics”: PMBus READ_VOUT Accuracy -1.0 (MIN), 1.0 (MAX) %. Changed Temp Range in ordering information from “-40°C to +85°C” to “0°C to +65°C” matching information in Thermal Information. Added over-temp note and reference Electrical spec table Min and Max columns. Added ordering information table, Pin Configuration and Pin Description Table, POD, Revision History and Products Information. Updated POD L32.5x5D to latest released version. Change to POD is as follows: Updated POD to new standards by adding land pattern and moving dimensions from table onto drawing.
2/19/09	FN6847.0	Assigned file number FN6847 to datasheet as this will be the first release with an Intersil file number. Replaced header and footer with Intersil header and footer. Updated disclaimer information to read "Intersil and it's subsidiaries including Zilker Labs, Inc." No changes to datasheet content.

Products

Intersil Corporation is a leader in the design and manufacture of high-performance analog semiconductors. The Company's products address some of the industry's fastest growing markets, such as, flat panel displays, cell phones, handheld products, and notebooks. Intersil's product families address power management and analog signal processing functions. Go to www.intersil.com/products for a complete list of Intersil product families.

*For a complete listing of Applications, Related Documentation and Related Parts, please see the respective device information page on intersil.com: ZL2004-01

To report errors or suggestions for this datasheet, please go to www.intersil.com/askourstaff

FITs are available from our website at http://rel.intersil.com/reports/search.php

For additional products, see www.intersil.com/product_tree

Intersil products are manufactured, assembled and tested utilizing ISO9000 quality systems as noted in the quality certifications found at www.intersil.com/design/quality

Intersil products are sold by description only. Intersil Corporation reserves the right to make changes in circuit design, software and/or specifications at any time without notice. Accordingly, the reader is cautioned to verify that data sheets are current before placing orders. Information furnished by Intersil is believed to be accurate and reliable. However, no responsibility is assumed by Intersil or its subsidiaries for its use; nor for any infringements of patents or other rights of third parties which may result from its use. No license is granted by implication or otherwise under any patent or patent rights of Intersil or its subsidiaries.

For information regarding Intersil Corporation and its products, see www.intersil.com

Package Outline Drawing

L32.5x5D

32 LEAD QUAD FLAT NO-LEAD PLASTIC PACKAGE
Rev 1, 3/10

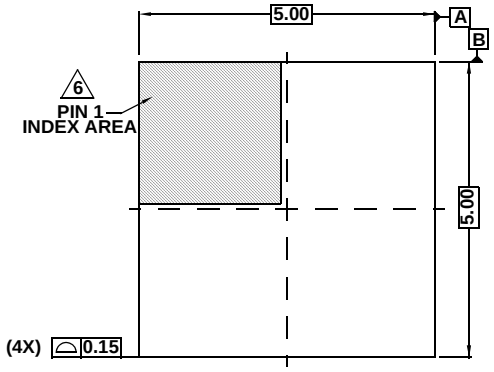

TOP VIEW

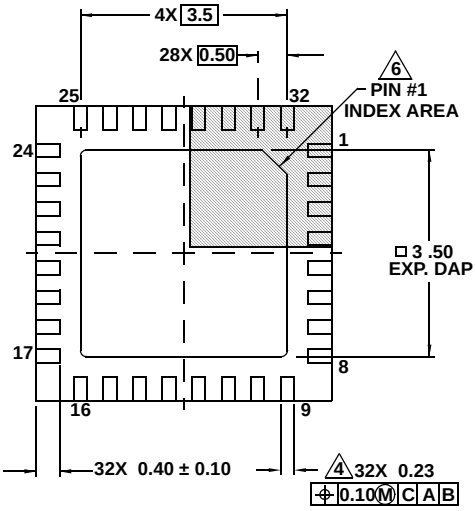

BOTTOM VIEW

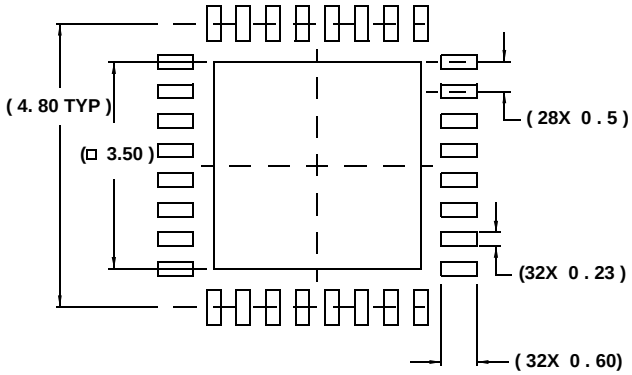

TYPICAL RECOMMENDED LAND PATTERN

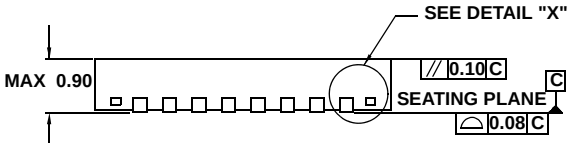

SIDE VIEW

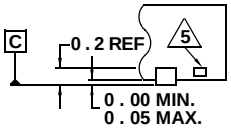

DETAIL "X"

NOTES:

1. Dimensions are in millimeters.
   Dimensions in ( ) for Reference Only.
2. Dimensioning and tolerancing conform to ASME Y14.5m-1994.
3. Unless otherwise specified, tolerance : Decimal ± 0.05
4. Dimension applies to the metallized terminal and is measured between 0.15mm and 0.30mm from the terminal tip.
5. Tiebar shown (if present) is a non-functional feature.
6. The configuration of the pin #1 identifier is optional, but must be located within the zone indicated. The pin #1 identifier may be either a mold or mark feature.

Package Outline Drawing

L32.5x5G

32 LEAD QUAD FLAT NO-LEAD PLASTIC PACKAGE
Rev 0, 3/10

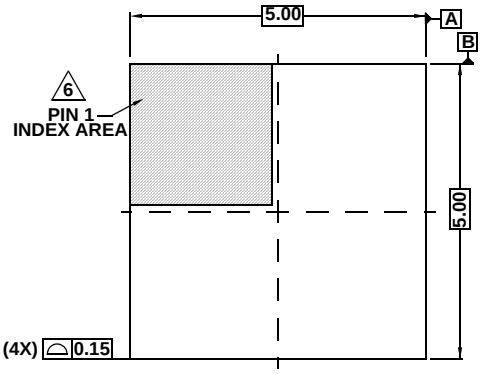

TOP VIEW

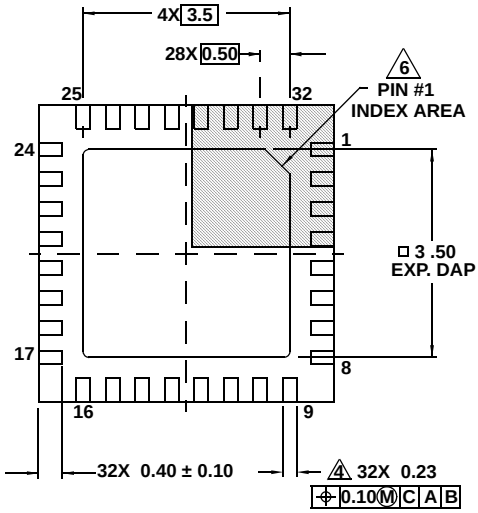

BOTTOM VIEW

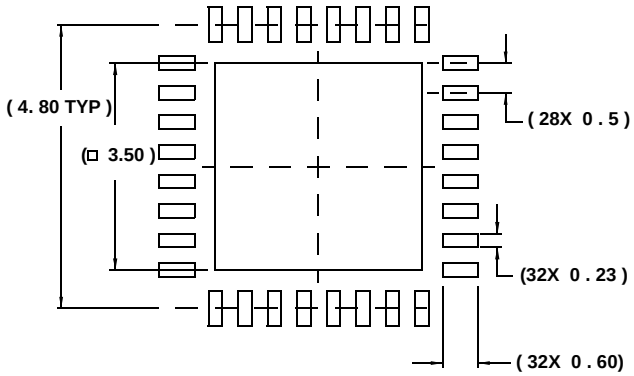

TYPICAL RECOMMENDED LAND PATTERN

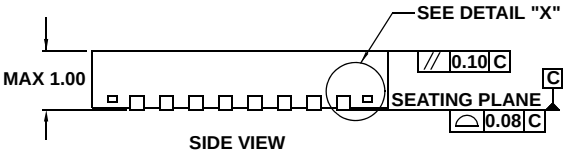

SIDE VIEW

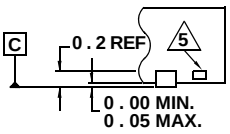

DETAIL "X"

NOTES:

1. Dimensions are in millimeters.
   Dimensions in ( ) for Reference Only.
2. Dimensioning and tolerancing conform to ASME Y14.5m-1994.
3. Unless otherwise specified, tolerance : Decimal ± 0.05
4. Dimension applies to the metallized terminal and is measured between 0.15mm and 0.30mm from the terminal tip.
5. Tiebar shown (if present) is a non-functional feature.
6. The configuration of the pin #1 identifier is optional, but must be located within the zone indicated. The pin #1 identifier may be either a mold or mark feature.