OBSOLETE – PART DISCONTINUED

PART OBSOLETE - USE SBR160S23

ZHCS756

SURFACE MOUNT SCHOTTKY BARRIER DIODE

Product Summary

- V_R = 60V
- I_F = 750mA
- I_R = 50μA

Features and Benefits

- High current capability (I_F = 750mA)
- Low V_F
- **Qualified to AEC-Q101 Standards for High Reliability**

Description and Applications

- DC – DC Converters
- Mobile Telecomms
- PCMIA

Mechanical Data

- Case: SOT23
- Case Material: Molded Plastic, "Green" Molding Compound. UL Flammability Classification Rating 94V-0
- Moisture Sensitivity: Level 1 per J-STD-020
- Terminals: Matte Tin Finish annealed over Alloy 42 leadframe (Lead Free Plating). Solderable per MIL-STD-202, Method 208
- Weight: 0.0089 grams (approximate)

SOT23



Top View

OBSOLETE

Ordering Information (Note 1)

Device	Packaging	Shipping
ZHCS756TA	SOT23	3000/Tape & Reel

Notes: 1. For Packaging Details, go to our website at http://www.diodes.com.

Marking Information

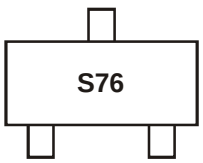

S76 = Product Type Marking Code

© Diodes Incorporated

OBSOLETE – PART DISCONTINUED

Maximum Ratings @T_A = 25°C unless otherwise specified

Characteristic		Symbol	Value	Units
Continuous Reverse Voltage		V_R	60	V
Continuous Forward Current		I_F	750	mA
Forward Voltage @ I_F = 750mA		V_F	610	mV
Average Peak Forward Current; D.C. = 50%		I_{FAV}	1500	mA
Non Repetitive Forward Current	t ≤ 100µs	I_{FSM}	12	A
	t ≤ 10ms		5	A

Thermal Characteristics

Characteristic	Symbol	Value	Unit
Power Dissipation, T_A = 25°C	P_D	500	mW
Junction Temperature	T_J	125	°C
Storage Temperature Range	T_{STG}	-55 to +150	°C

Electrical Characteristics @T_A = 25°C unless otherwise specified

Characteristic	Symbol	Min	Typ	Max	Unit	Test Condition
Reverse Breakdown Voltage	$V_{(BR)R}$	60	80	-	V	I_R = 300µA
Forward Voltage (Note 2)	V_F	-	250	290	mV	I_F = 50mA
		-	285	330		I_F = 100mA
		-	350	410		I_F = 250mA
		-	440	500		I_F = 500mA
		-	520	610		I_F = 750mA
		-	600	700		I_F = 1A
		-	760	900		I_F = 1.5A
Reverse Current	I_R	-	50	100	µA	V_R = 45V
Diode Capacitance	C_D	-	17	-	pF	f = 1MHz, V_R = 25V
Reverse Recovery Time	trr	-	12	-	ns	Switched from I_F = 500mA to I_R = 500mA Measured @ I_R = 50mA

Notes: 2. Measured under pulsed conditions. Pulse width = 300µS. Duty cycle ≤ 2%.

OBSOLETE

© Diodes Incorporated

OBSOLETE – PART DISCONTINUED

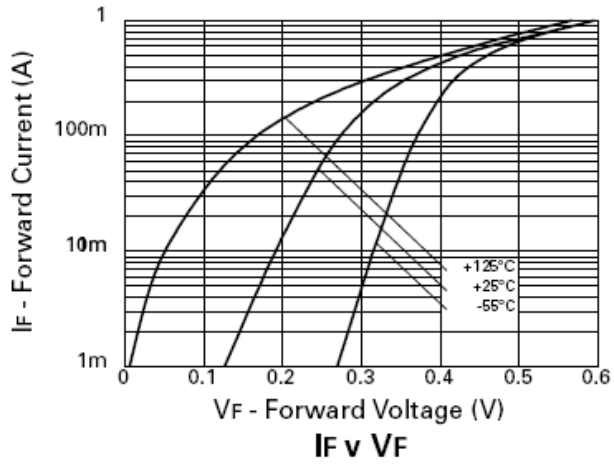

IF v VF

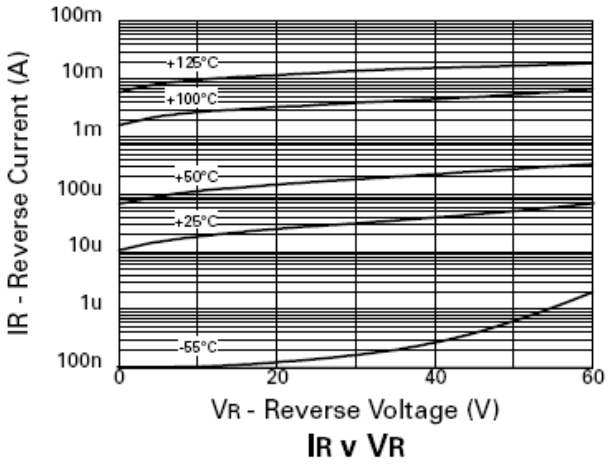

IR v VR

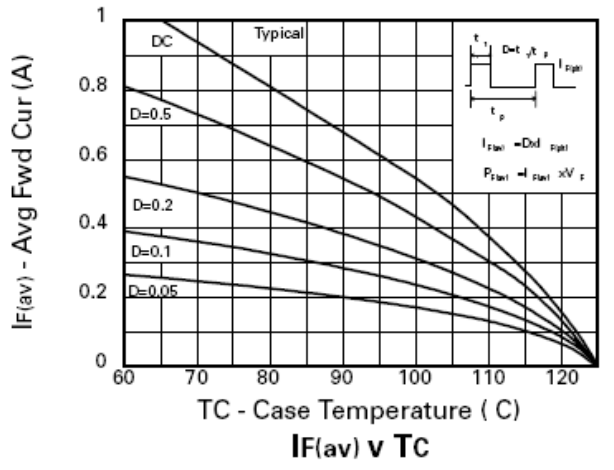

IF(av) v TC

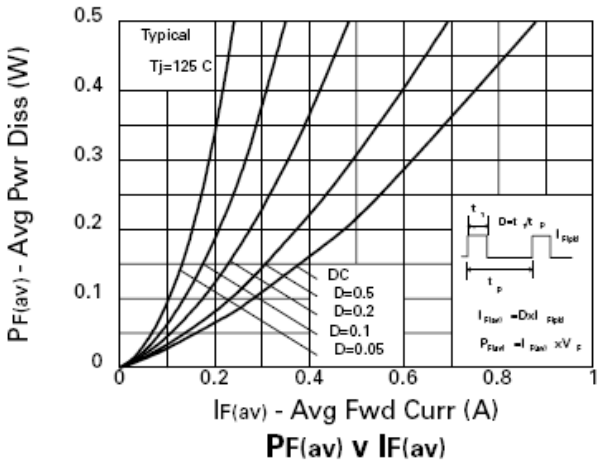

PF(av) v IF(av)

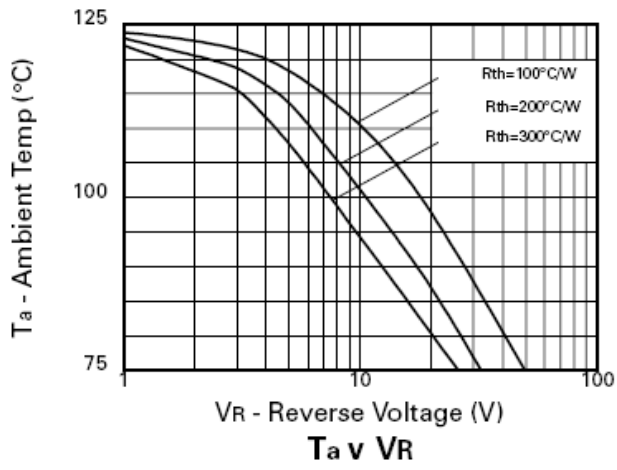

Ta v VR

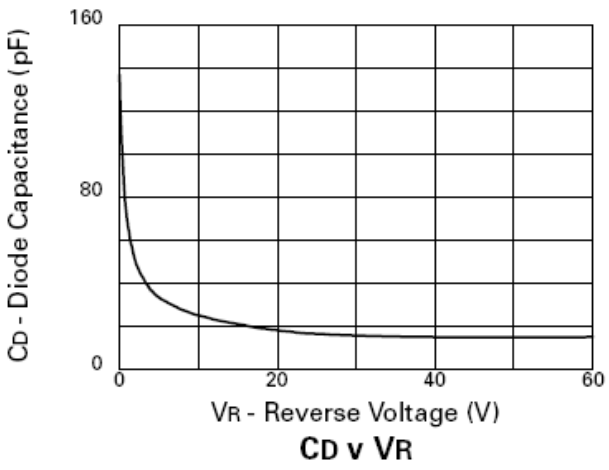

CD v VR

© Diodes Incorporated

OBSOLETE – PART DISCONTINUED

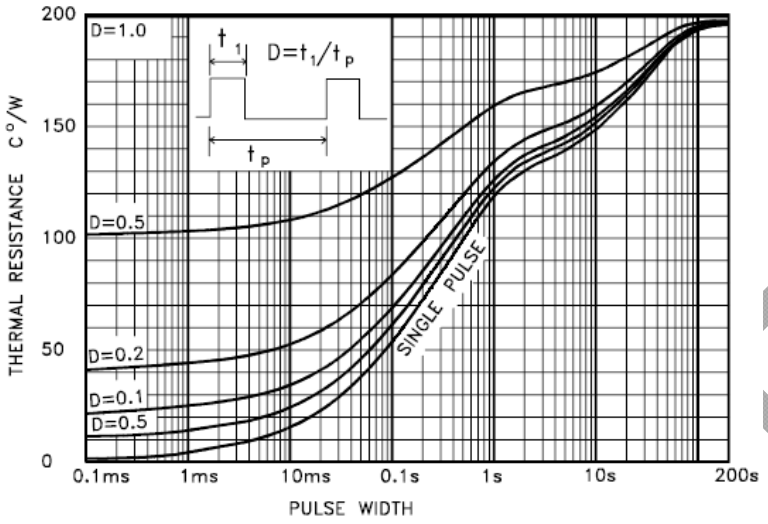

MAXIMUM TRANSIENT THERMAL RESISTANCE*

* Reference above figure, devices were mounted on a 15mmx15mm ceramic substrate.

Package Outline Dimensions

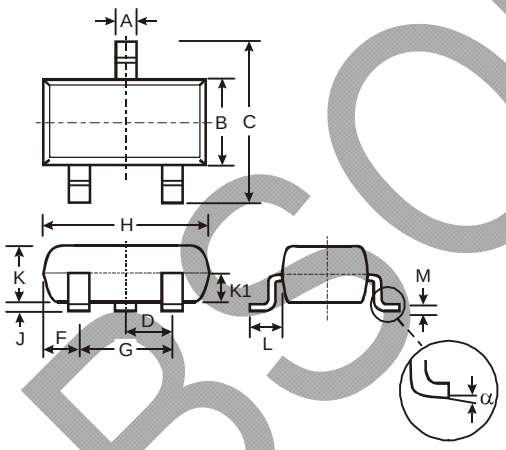

SOT23			
Dim	**Min**	**Max**	**Typ**
A	0.37	0.51	0.40
B	1.20	1.40	1.30
C	2.30	2.50	2.40
D	0.89	1.03	0.915
F	0.45	0.60	0.535
G	1.78	2.05	1.83
H	2.80	3.00	2.90
J	0.013	0.10	0.05
K	0.903	1.10	1.00
K1	-	-	0.400
L	0.45	0.61	0.55
M	0.085	0.18	0.11
α	0°	8°	-
All Dimensions in mm			

Suggested Pad Layout

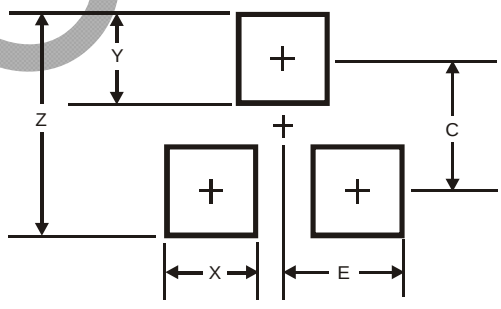

Dimensions	Value (in mm)
Z	2.9
X	0.8
Y	0.9
C	2.0
E	1.35

OBSOLETE

© Diodes Incorporated

OBSOLETE – PART DISCONTINUED

IMPORTANT NOTICE

DIODES INCORPORATED MAKES NO WARRANTY OF ANY KIND, EXPRESS OR IMPLIED, WITH REGARDS TO THIS DOCUMENT, INCLUDING, BUT NOT LIMITED TO, THE IMPLIED WARRANTIES OF MERCHANTABILITY AND FITNESS FOR A PARTICULAR PURPOSE (AND THEIR EQUIVALENTS UNDER THE LAWS OF ANY JURISDICTION).

Diodes Incorporated and its subsidiaries reserve the right to make modifications, enhancements, improvements, corrections or other changes without further notice to this document and any product described herein. Diodes Incorporated does not assume any liability arising out of the application or use of this document or any product described herein; neither does Diodes Incorporated convey any license under its patent or trademark rights, nor the rights of others. Any Customer or user of this document or products described herein in such applications shall assume all risks of such use and will agree to hold Diodes Incorporated and all the companies whose products are represented on Diodes Incorporated website, harmless against all damages.

Diodes Incorporated does not warrant or accept any liability whatsoever in respect of any products purchased through unauthorized sales channel. Should Customers purchase or use Diodes Incorporated products for any unintended or unauthorized application, Customers shall indemnify and hold Diodes Incorporated and its representatives harmless against all claims, damages, expenses, and attorney fees arising out of, directly or indirectly, any claim of personal injury or death associated with such unintended or unauthorized application.

Products described herein may be covered by one or more United States, international or foreign patents pending. Product names and markings noted herein may also be covered by one or more United States, international or foreign trademarks.

LIFE SUPPORT

Diodes Incorporated products are specifically not authorized for use as critical components in life support devices or systems without the express written approval of the Chief Executive Officer of Diodes Incorporated. As used herein:

A. Life support devices or systems are devices or systems which:

1. are intended to implant into the body, or
2. support or sustain life and whose failure to perform when properly used in accordance with instructions for use provided in the labeling can be reasonably expected to result in significant injury to the user.

B. A critical component is any component in a life support device or system whose failure to perform can be reasonably expected to cause the failure of the life support device or to affect its safety or effectiveness.

Customers represent that they have all necessary expertise in the safety and regulatory ramifications of their life support devices or systems, and acknowledge and agree that they are solely responsible for all legal, regulatory and safety-related requirements concerning their products and any use of Diodes Incorporated products in such safety-critical, life support devices or systems, notwithstanding any devices- or systems-related information or support that may be provided by Diodes Incorporated. Further, Customers must fully indemnify Diodes Incorporated and its representatives against any damages arising out of the use of Diodes Incorporated products in such safety-critical, life support devices or systems.

Copyright © 2011, Diodes Incorporated

www.diodes.com

OBSOLETE