Enclosed Switches
ZE/ZV/XE/XV

Long Service Life and Large Breaking Power

- ZE, ZV, and ZV2 incorporate Model Z Basic Switches with rugged diecast cases.
- Available with various models of built-in switches (including split contact model, maintained operation type, magnetic blowout model) and various actuators.



Model Number Structure

■ Model Number Legend

□□-□-2□
1 2 3 4

1. Built-in Switch
- Z: SPDT (AC)
- X: SPDT (DC)

2. Mounting Direction
- E: Side mounting
- V: Base mounting
- V2: Diagonal side mounting

3. Actuator
- Q: Plunger
- Q22: Roller plunger
- Q21: Crossroller plunger
- QA2: Roller arm lever
- QA277: One-way action roller arm lever
- N: Sealed plunger
- N22: Sealed roller plunger (ZE, ZV, ZV2 only)
- N21: Sealed crossroller plunger (ZE, ZV, ZV2 only)
- NA2: Sealed roller arm lever
- NA277: Sealed one-way action roller arm lever

4. Conduit/Ground Terminal
- None: G $^1/_2$/without ground terminal
- G1: G $^1/_2$/with ground terminal
- G: Pg13.5/with ground terminal
- SG1: $^1/_2$-14NPSM/with ground terminal
- YG1: M20/with ground terminal
- S: $^1/_2$-14NPSM/without ground terminal
- Y: M20/without ground terminal

Ordering Information

■ List of Models

Standard Switches

Contact		Actuator	Side mounting		Diagonal side mounting		Base mounting	
			General purpose	Sealed (Booted)	General purpose	Sealed (Booted)	General purpose	Sealed (Booted)
AC/DC load	SPDT	Plunger	ZE-Q-2	ZE-N-2	ZV2-Q-2	ZV2-N-2	ZV-Q-2	ZV-N-2
		Roller plunger	ZE-Q22-2	ZE-N22-2	ZV2-Q22-2	ZV2-N22-2	ZV-Q22-2	ZV-N22-2
		Crossroller plunger	ZE-Q21-2	ZE-N21-2	ZV2-Q21-2	ZV2-N21-2	ZV-Q21-2	ZV-N21-2
		Roller arm lever	ZE-QA2-2	ZE-NA2-2	ZV2-QA2-2	ZV2-NA2-2	ZV-QA2-2	ZV-NA2-2
		One-way action arm lever	ZE-QA277-2	ZE-NA277-2	ZV2-QA277-2	ZV2-NA277-2	ZV-QA277-2	ZV-NA277-2
DC load	SPDT	Plunger	XE-Q-2	XE-N-2	XV2-Q-2	XV2-N-2	XV-Q-2	XV-N-2
		Roller plunger	XE-Q22-2	---	XV2-Q22-2	---	XV-Q22-2	---
		Crossroller plunger	XE-Q21-2	---	XV2-Q21-2	---	XV-Q21-2	---
		Roller arm lever	XE-QA2-2	XE-NA2-2	XV2-QA2-2	XV2-NA2-2	XV-QA2-2	XV-NA2-2
		One-way action arm lever	XE-QA277-2	XE-NA277-2	---	XV2-NA277-2	XV-QA277-2	XV-NA277-2

Note: 1. The diagonal side mounting model feature improved sealing property, improved mounting strength through use of M5 screws, increased stability in seating with large mounting width (31 x 75 mm) and permit coupling of a number of Switch units.

2. ZE, ZV, and ZV2 series are approved by UL and CSA.

Specifications

■ Approved Standards

Agency	Standard	File No.
UL	UL508	E76675
CSA	CSA C22.2 No. 14	LR45746

Note: Models XE, XV, and XV2 are not approved by UL and CSA.

■ Approved Standard Ratings

UL/CSA

Model	Rated voltage	Current	Horsepower
ZE	125 VAC	15 A	1/8 HP
	250 VAC		1/4 HP
	480 VAC		
	125 VDC	0.5 A	---
	250 VDC	0.25 A	

■ Ratings

Contact	Contact	Rated voltage	Non-inductive load				Inductive load			
			Resistive load		Lamp load		Inductive load		Motor load	
			NC	NO	NC	NO	NC	NO	NC	NO
ZE-□ ZV-□ ZV2-□		125 VAC	15 A		3 A	1.5 A	15 A		5 A	2.5 A
		250 VAC	15 A		2.5 A	1.25 A	15 A		3 A	1.5 A
		480 VAC	10 A		1.5 A	0.75 A	6 A		1.5 A	0.75 A
		125 VDC	0.5 A		0.5 A		0.05 A		0.05 A	
		250 VDC	0.25 A		0.25 A		0.03 A		0.03 A	
XE-□ XV-□ XV2-□		8 VDC	15 A		3 A	3 A	15 A	15 A	10 A	10 A
		14 VDC	15 A		3 A	3 A	15 A	10 A	10 A	10 A
		30 VDC	15 A		3 A	3 A	10 A	10 A	10 A	6 A
		125 VDC	10 A		3 A	1.5 A	7.5 A	6 A	6 A	4 A
		250 VDC	3 A		1.5 A	0.75 A	2 A	1.5 A	2 A	1 A

Note: 1. The above figures are for standard currents.
2. Inductive loads have a power factor of 0.4 min. (AC) and a time constant of 7 ms max. (DC).
3. Lamp load has an inrush current of 10 times the steady-state current.
4. Motor load has an inrush current of 6 times the steady-state current.

Inrush current	NC	30 A max.
	NO	15 A max.

■ Characteristics

Degree of protection	IP65 (see note 2)
Durability (see note 3)	Mechanical: Z□: 10,000,000 operations min. X□: 1,000,000 operations min. Electrical: Z□: 500,000 operations min., for 15 A, 250 VAC resistive load X□: 100,000 operations min., for 10 A, 125 VDC resistive load
Operating speed	Plunger type: 0.01 mm to 0.5 m/s Lever type: 0.02 mm to 0.5 m/s
Operating frequency	Mechanical: 120 operations/min Electrical: 20 operations/min
Rated frequency	50/60 Hz
Insulation resistance	100 MΩ min. (at 500 VDC)
Contact resistance	15 mΩ max. (initial value)
Terminal temperature rise	50° max.
Dielectric strength	1,000 VAC, 50/60 Hz for 1 min between terminals of the same polarity 2,000 VAC, 50/60 Hz for 1 min between current-carrying metal part and ground, and between each terminal and non-current-carrying metal part (1,500 VAC for Z□ models and X□ models)
Vibration resistance	Malfunction: 10 to 55 Hz, 1.5-mm double amplitude (see note 4)
Shock resistance (see note 4)	Destruction: 1,000 m/s^2 min. Malfunction: 100 m/s^2 min. (see note 5), 50 m/s^2 min. (see note 6)
Ambient temperature (see note 1)	Operating: –10°C to 80°C (with no icing)
Ambient humidity	Operating: General-purpose type: 85% max. Sealed type: 95% max.
Weight	Approx. 260 to 280 g

Note: 1. The above figures are initial values.
2. IP65 for □E-N models and IP60 for □E-Q models.
3. The values are calculated at an operating temperature of 5°C to 35°C, and an operating humidity of 40% to 70%. Contact your OMRON sales representative for more detailed information on other operating environments.
4. At the operation limit positions.
5. Only for plunger, sealed plunger, roller arm lever, and sealed roller arm lever.
6. Only for crossroller plunger, sealed crossroller plunger, roller plunger, and sealed roller plunger.

■ Operating Characteristics

Model	ZE-Q-2	XE-Q-2	ZE-Q22-2	XE-Q22-2	ZE-Q21-2
OF	2.45 to 3.43 N	5.00 N max.	2.45 to 3.43 N	5.00 N max.	2.45 to 3.43 N
RF min.	1.12 N	1.12 N	1.12 N	1.12 N	1.12 N
PT max.	0.4 mm	0.9 mm	0.5 mm	0.9 mm	0.5 mm
OT min.	5.5 mm	5.5 mm	3.6 mm	3.6 mm	3.6 mm
MD max.	0.05 mm	0.47 mm	0.05 mm	0.47 mm	0.05 mm
OP	38.2±0.8 mm		49.7±1 mm		49.7±1 mm

Model	XE-Q21-2	ZE-QA2-2	XE-QA2-2	ZE-QA277-2	XE-QA277-2	ZE-N-2
OF	5.00 N max.	5.59 N max.	6.47N max.	5.59 N	6.47 N	7.85 N
RF min.	1.12 N	1.67 N	1.67 N	1.67 N	1.67 N	2.35 N
PT max.	0.9 mm	4 mm	6 mm	4 mm	6 mm	2 mm
OT min.	3.6 mm	6 mm	5.5 mm	6 mm	5.5 mm	5 mm
MD max.	0.47 mm	0.4 mm	0.72 mm	0.4 mm	0.72 mm	0.1 mm
OP	49.7±1 mm	---				45.8±0.8 mm

Model	XE-N-2	ZE-N22-2	ZE-N21-2	ZE-NA2-2	XE-NA2-2	ZE-NA277-2
OF	10.20 N	4.90 N		6.28 N	7.26 N	6.28 N
RF min.	2.35 N	0.98 N		2.26 N	2.26 N	2.26 N
PT max.	3 mm	1 mm		5 mm	6 mm	5 mm
OT min.	4 mm	3.5 mm		6 mm	5.5 mm	6 mm
MD max.	0.47 mm	0.12 mm		0.4 mm	0.72 mm	0.4 mm
OP	45.8±0.8 mm	49.7±0.8 mm		---		

Model	XE-NA277-2	ZV(2)-Q-2	XV(2)-Q-2	ZV(2)-Q22-2	XV(2)-Q22-2
OF	7.26 N	2.45 to 3.43 N	5.00 N max.	2.45 to 3.43 N	5.00 N max.
RF min.	2.26 N	1.12 N	1.12 N	1.12 N	1.12 N
PT max.	6 mm	0.4 mm	0.9 mm	0.5 mm	0.9 mm
OT min.	5.5 mm	5.5 mm	5.5 mm	3.6 mm	3.6 mm
MD max.	0.72 mm	0.05 mm	0.47 mm	0.05 mm	0.47 mm
OP	---	63.7±0.8 mm (ZV-Q-2, XV-Q-2) (see note 1)		75.2±0.8 mm (ZV-Q-22.2, XV-Q21-2) (see note 2)	

Model	ZV(2)-Q21-2	XV(2)-Q21-2	ZV(2)-QA2-2	XV(2)-QA2-2	ZV(2)-QA277-2
OF	2.45 to 3.43 N	5.00 N max.	5.59 N max.	6.47 N max.	5.59 N
RF min.	1.12 N	1.12 N	1.67 N	1.67 N	1.67 N
PT max.	0.5 mm	0.9 mm	4 mm	6 mm	4 mm
OT min.	3.6 mm	3.6 mm	6 mm	5.5 mm	6 mm
MD max.	0.05 mm	0.47 mm	0.4 mm	0.72 mm	0.4 mm
OP	75.2±0.8 mm (ZV-Q22-2, XV-Q21-2) (see note 3)		---		

Note: 1. The OP of ZV2-Q-2/XV2-Q-2 is 24.2±0.8 mm.
2. The OP of ZV2-Q22-2/XV2-Q22-2 is 35.7±1 mm.
3. The OP of ZV2-Q21-2/XV2-Q21-2 is 35.7±0.8 mm.

Model	XV(2)-QA277-2	ZV(2)-N-2	XV(2)-N-2	ZV(2)-N22-2	ZV(2)-N21-2	ZV(2)-NA2-2
OF	6.47 N	7.85 N	10.20 N	4.90 N		6.28 N
RF min.	1.67 N	2.35 N	2.35 N	0.98 N		2.26 N
PT max.	6 mm	2 mm	3 mm	1 mm		5 mm
OT min.	5.5 mm	5 mm	4 mm	3.5 mm		6 mm
MD max.	0.72 mm	0.1 mm	0.47 mm	0.12 mm		0.4 mm
OP	---	71.4±0.8 mm (ZV-N-2, XV-N-2) (see note 1)		75.2±0.8 mm (ZV-N22-2, ZV-N21-2) (see note 2)		---

Note: 1. The OP of ZV2-N-2/XV2-N-2 is 31.9±0.8 mm.
2. The OP of ZV2-N22-2/ZV2-N21-2 is 35.7±0.8 mm.

Model	XV(2)-NA2-2	ZV(2)-NA277-2	XV(2)-NA277-2
OF	7.26 N	6.28 N	7.26 N
RF min.	2.26 N	2.26 N	2.26 N
PT max.	6 mm	5 mm	6 mm
OT min.	5.5 mm	6 mm	5.5 mm
MD max.	0.72 mm	0.4 mm	0.72 mm
FP max.	---		
OP	---		

■ Contact Form

ZE-□, ZV-□, ZV2-□
XE-□, XV-□, XV2-□

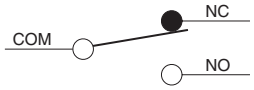

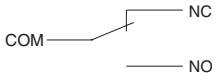

EN60947-5-1

Note: With the XE-□, XV-□, and XV2-□, be sure to connect COM to the + terminal.

Engineering Data

■ Electrical Durability

ZE (cosϕ = 1)

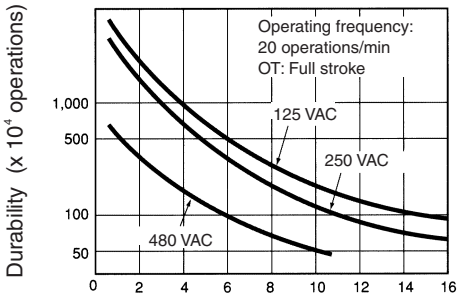

XE (L/R = 0)

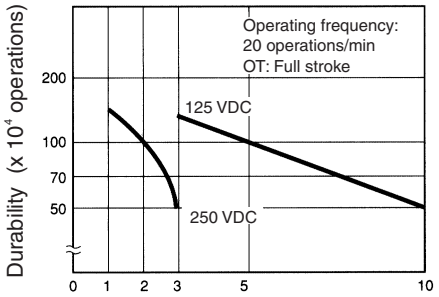

ZE (cosϕ = 0.4)

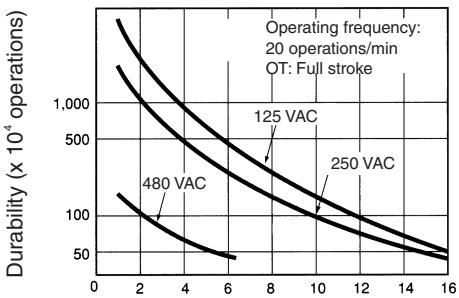

XE (L/R = 7 ms)

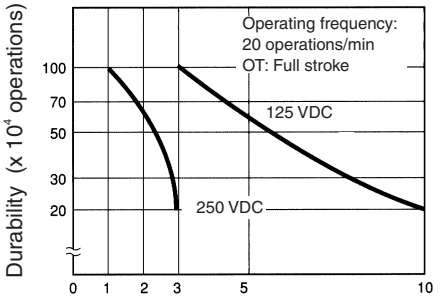

Nomenclature

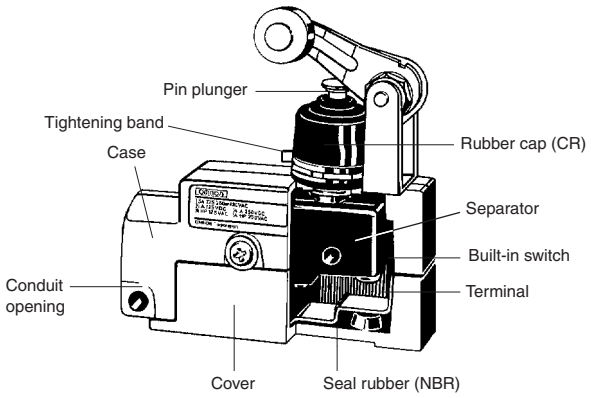

Dimensions

Note: 1. All units are in millimeters unless otherwise indicated.

2. Unless otherwise specified, a tolerance of ±0.4 mm applies to all dimensions.

3. In the drawings for the Base Mounting Type Switches (ZV), the mounting surfaces (flanges) are shown by lines of alternate long and two short dashes.

Side Mounting

Plunger
ZE-Q-2, XE-Q-2

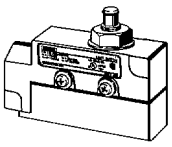

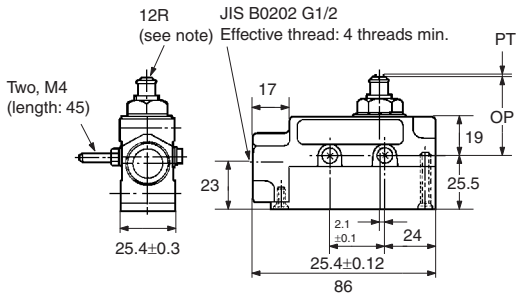

Note: Stainless steel plunger

Roller Plunger
ZE-Q22-2, XE-Q22-2

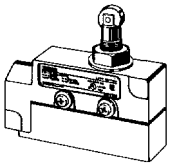

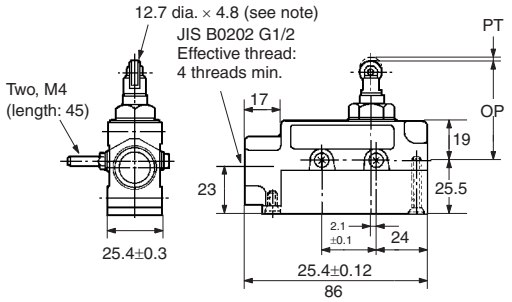

Note: Stainless steel roller

Crossroller Plunger
ZE-Q21-2, XE-Q21-2

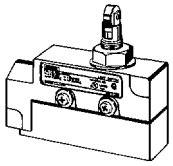

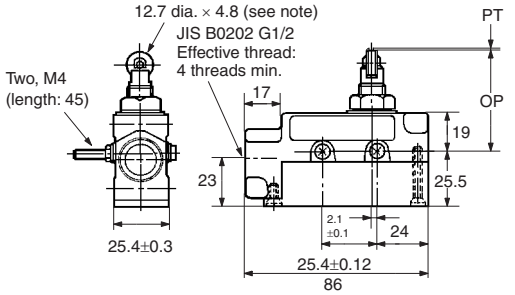

Note: Stainless steel roller

Roller Arm Lever
ZE-QA2-2, XE-QA2-2

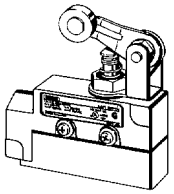

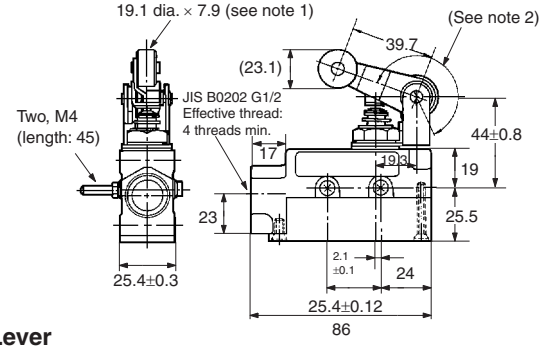

Note: **1.** Stainless sintered roller
2. Adjustable between 0° and 225°

One-way Action Roller Arm Lever
ZE-QA277-2, XE-QA277-2

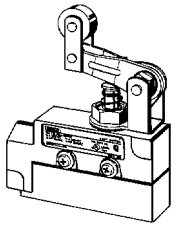

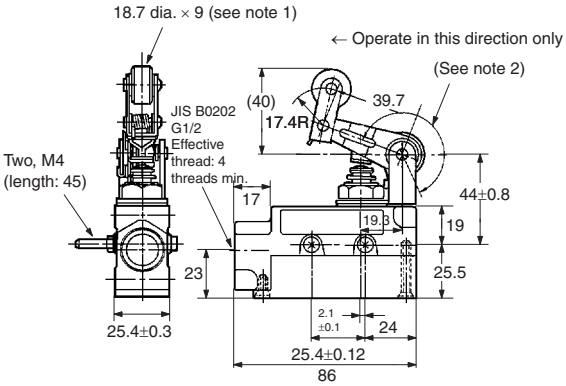

Note: **1.** Stainless sintered alloy roller
2. Adjustable between 0° and 225°

Sealed Plunger
ZE-N-2, XE-N-2

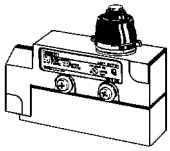

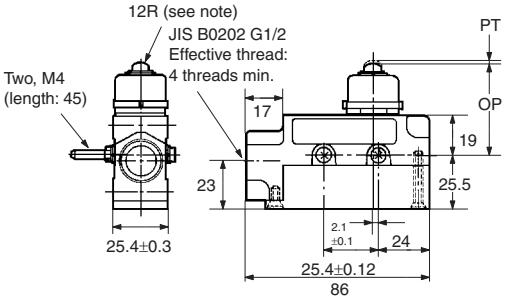

Note: Stainless steel plunger

Sealed Roller Plunger
ZE-N22-2

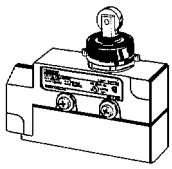

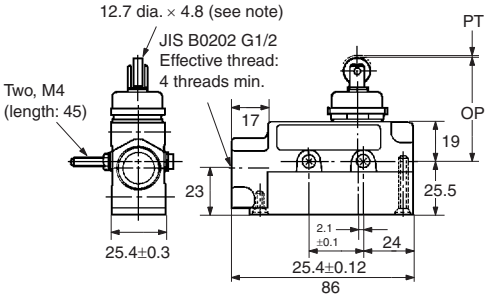

Note: Stainless steel roller

Sealed Crossroller Plunger
ZE-N21-2

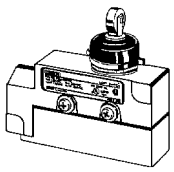

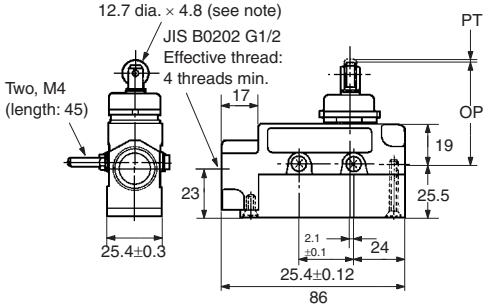

Note: Stainless steel roller

Sealed Roller Arm Lever
ZE-NA2-2, XE-NA2-2

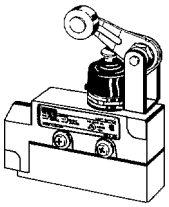

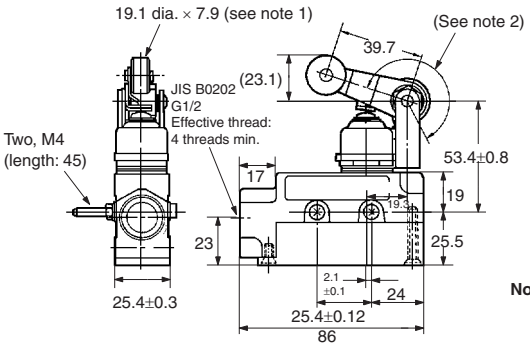

Note: **1.** Stainless steel roller
2. Adjustable between 0° and 225°

One-way Action Sealed Roller Arm Lever
ZE-NA277-2, XE-NA277-2

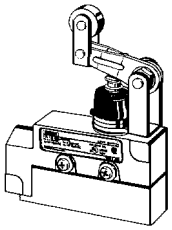

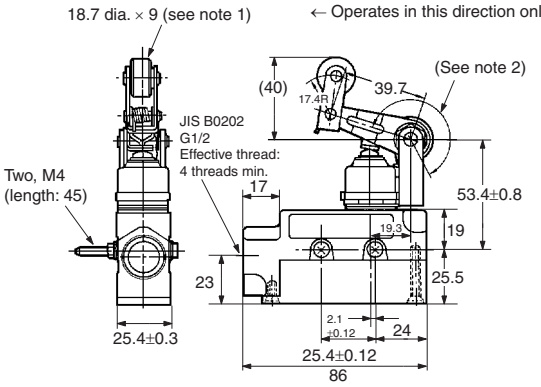

Note: **1.** Stainless steel roller
2. Adjustable between 0° and 225°

Mounting Hole

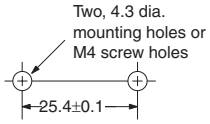

Base Mounting/Diagonal Side Mounting

Plunger
ZV(2)-Q-2, XV(2)-Q-2

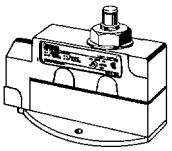

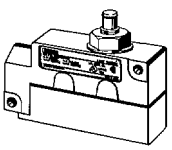

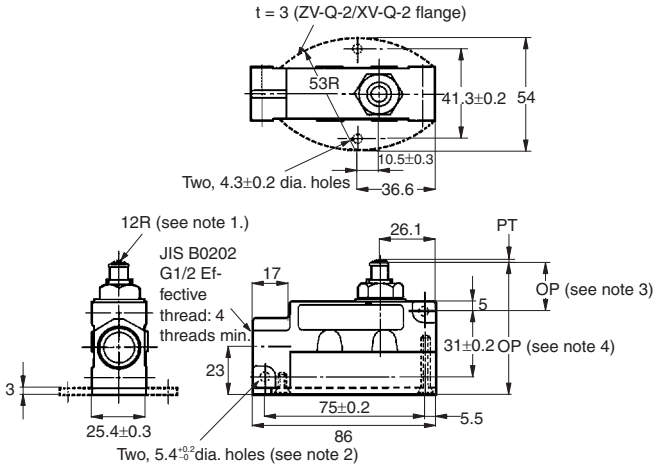

Note: **1.** Stainless steel plunger
2. Only the ZV2-Q-2 and XV2-Q-2 incorporate mounting holes.
3. OP for ZV2-Q-2 and XV2-Q-2 is 24.2 ±0.8 mm.

Roller Plunger
ZV(2)-Q22-2, XV(2)-Q22-2

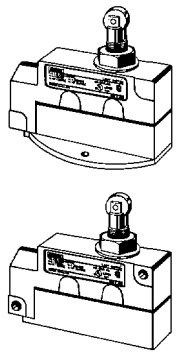

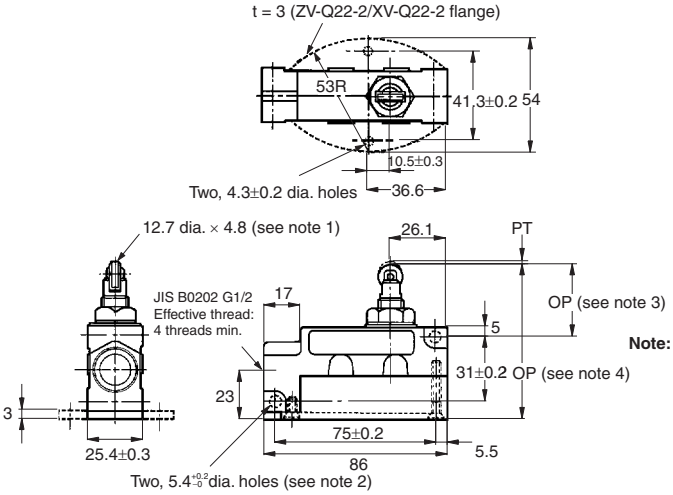

Note:
1. Stainless steel roller
2. Only the ZV2-Q22-2 and XV2-Q22-2 incorporate mounting holes.
3. OP for ZV2-Q22-2 and XV2-Q22-2 is 35.7 ±1 mm.

Crossroller Plunger
ZV(2)-Q21-2, XV(2)-Q21-2

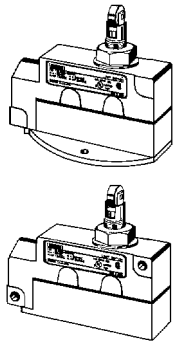

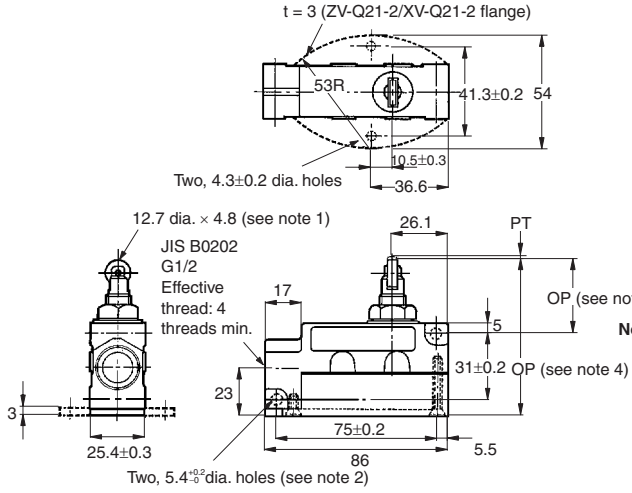

Note:
1. Stainless steel roller
2. Only the ZV2-Q21-2 and XV2-Q21-2 incorporate mounting holes.
3. OP for ZV2-Q21-2 and XV2-Q21-2 is 35.7 ±0.8 mm.

Roller Arm Lever
ZV(2)-QA2-2, XV(2)-QA2-2

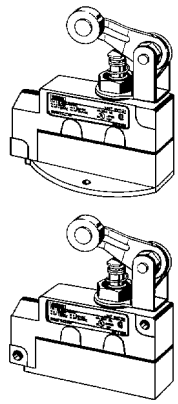

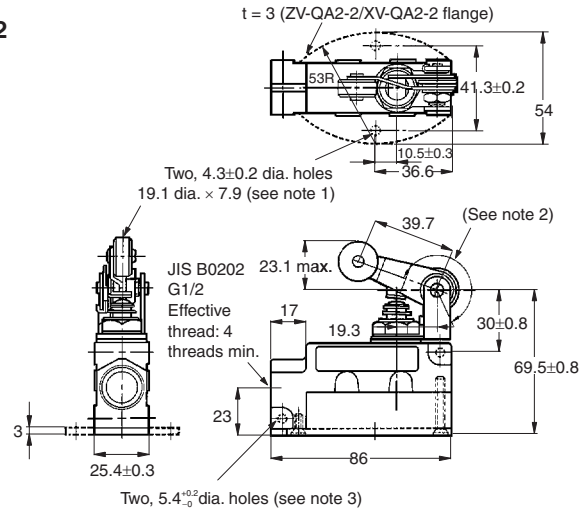

Note:
1. Stainless sintered alloy roller
2. Adjustment between 0° to 225°.
3. Only the ZV2-QA2-2 and XV2-QA2-2 incorporate mounting holes.

One-way Action Roller Arm Lever
ZV(2)-QA277-2, XV(2)-QA277-2

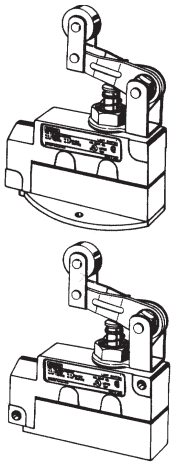

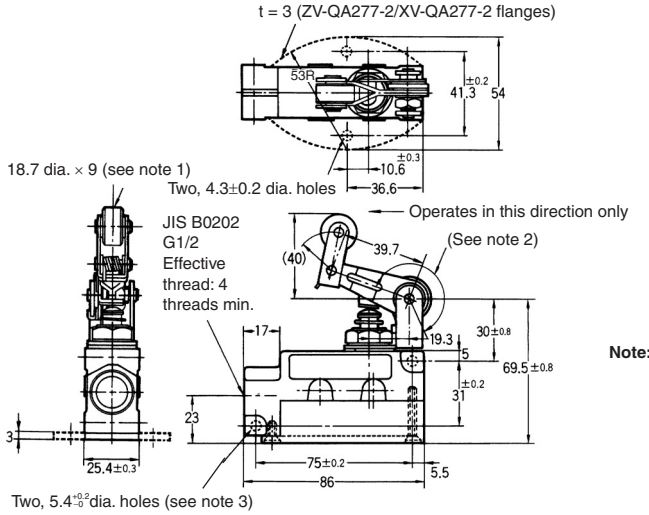

Note: **1.** Stainless steel roller
2. Adjustment between 0° to 225°.
3. Only the ZV2-QA277-2 and XV2-QA277-2 incorporate mounting holes.

Sealed Plunger
ZV(2)-N-2, XV(2)-N-2

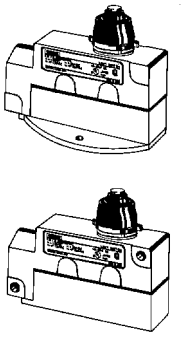

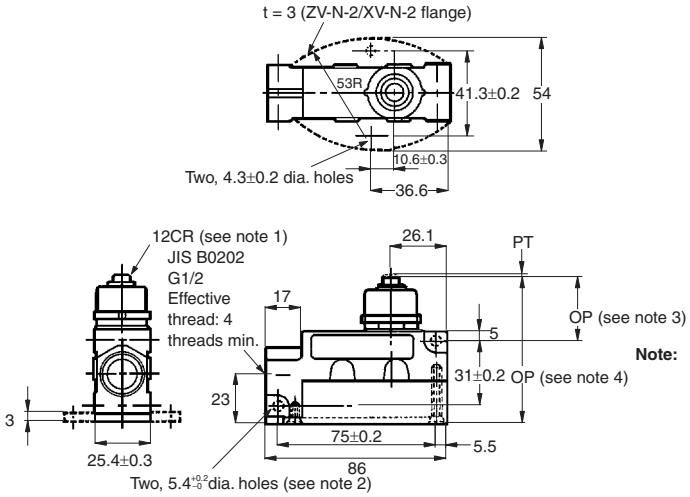

Note: **1.** Stainless steel plunger
2. Only the ZV2-N-2 and XV2-N-2 incorporate mounting holes.
3. OP for ZV2-N-2 and XV2-N-2 is 31.9 ±0.8 mm.

Sealed Roller Plunger
ZV(2)-N22-2

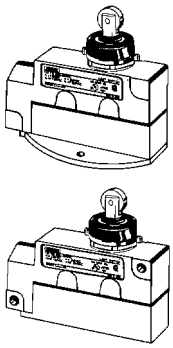

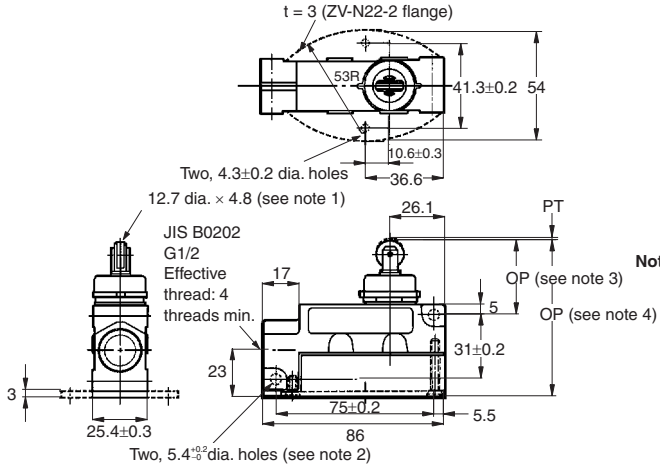

Note: **1.** Stainless steel roller
2. Only the ZV2-N22-2 incorpo incorporate mounting holes.
3. OP for ZV2-N22-2 is 35.7 ±0.8 mm.

Sealed Crossroller Plunger
ZV(2)-N21-2

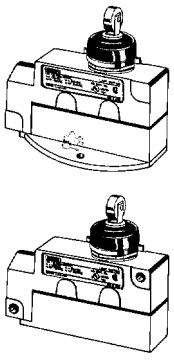

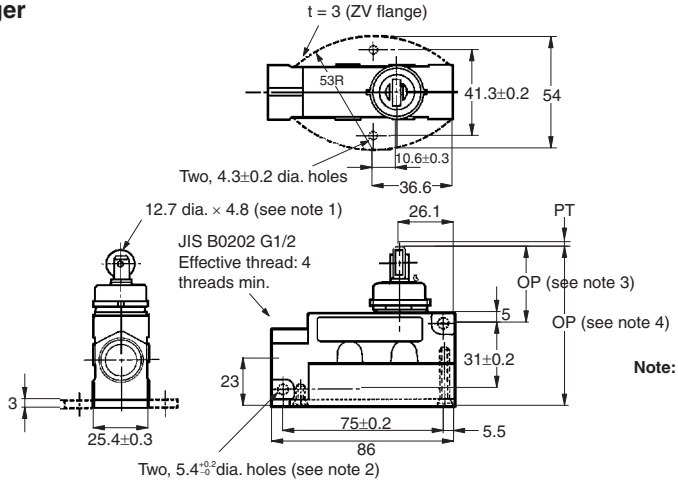

Note: **1.** Stainless steel roller
2. Only the ZV2-N21-2 incorporate mounting holes.
3. OP for ZV2-N21-2 is 35.7 ±0.8 mm.

Sealed Roller Arm Lever
ZV(2)-NA2-2, XV(2)-NA2-2

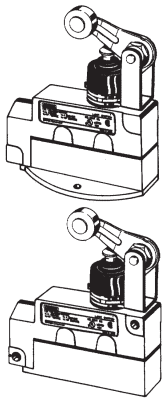

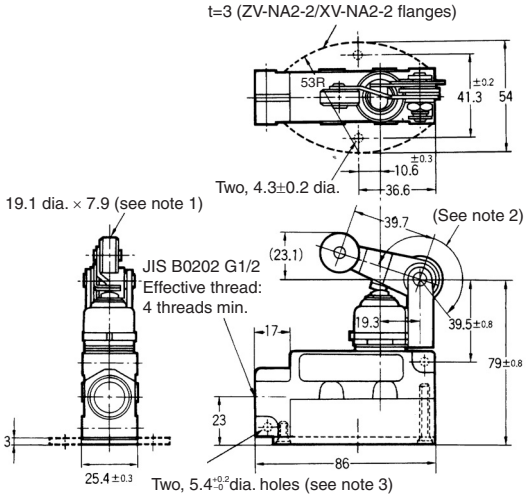

Note: **1.** Stainless steel roller
2. Adjustment between 0° to 225°.
3. Only the ZV2-NA2-2 and XV2-NA2-2 incorporate mounting holes.

One-way Action Sealed Roller Arm Lever
ZV(2)-NA277-2, XV(2)-NA277-2

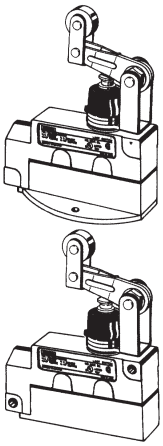

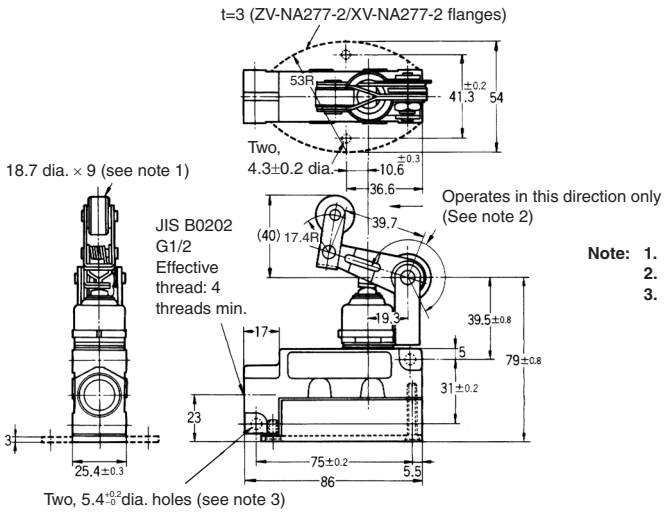

Note: **1.** Stainless steel roller
2. Adjustment between 0° to 225°.
3. Only the ZV2-NA277-2 and XV2-NA277-2 incorporate mounting holes.

Precautions

■ Correct Use

Mounting

With the Roller Lever-type Enclosed Switches, the roller arm has been temporarily tightened prior to shipment, so that its position may be adjusted later. When mounting the Switch, be sure to re-tighten the roller arm so as to prevent it from becoming loose during operation.

To adequately maintain the seals at the mounting screw section on the side of the Enclosed Switch, insert each O-ring correctly and secure it with the lock nut.

To provide the Switch with improved sealing property, use of the SC Connector is recommended.

When routing wires into the conduit opening, be sure that cuttings and other foreign matter do not enter the Switch.

Environmental Precautions

Sealing materials may deteriorate when used outdoors or when exposed to cutting oil, solvents, or chemicals. Check this on actual equipment and, if deterioration is foreseen, consult your OMRON representative in advance.

Be sure to protect part A with grease in order to maintain the mechanical life and performance of the Limit Switch. The use of molybdenum disulfide grease is recommended.

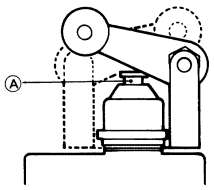

Tightening Torque

A loose screw may result in a malfunction. Be sure to tighten each screw to the proper tightening torque as shown below.

No.	Type	Torque
1	Cover mounting screw	1.18 to 1.37 N·m
2	Switch mounting screw (see note 1)	1.18 to 1.37 N·m
3	Switch mounting screw (see note 2)	4.90 to 5.88 N·m
4	Switch terminal screw (M4 screws for head)	0.78 to 1.18 N·m
5	Roller arm mounting nut	4.90 to 5.88 N·m

Note: 1. This torque range applies to side mounting or bottom mounting. (M4 screws for head)

2. This torque range applies to side diagonal mounting. (M5 Allen-head bolt)

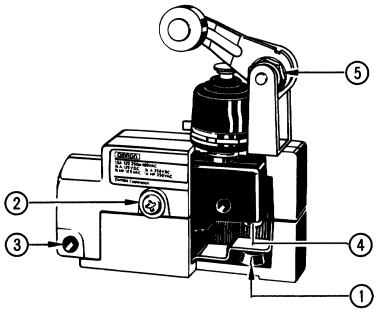

Mounting

Mounting Holes

Side Mounting **Bottom Mounting**

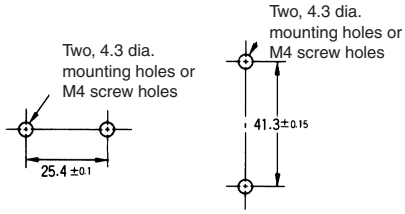

Side Diagonal Mounting

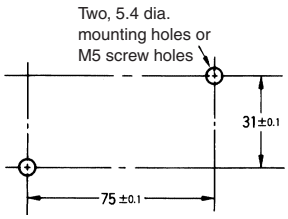

Operation

- Operating method, shape of cam or dog, operating frequency, and the overtravel (OT) have significant effect on the service life and precision of the Limit Switch. Make sure that the shape of the cam is smooth enough.
- Check that OT has a sufficient margin. The actual OT should be rated OT x 0.7 to 1.

Dedicated Wrench

The roller arm can be set freely within a range of 225° after loosening the nut.

The roller arm mounting bracket can be set in any direction after loosening the nut.

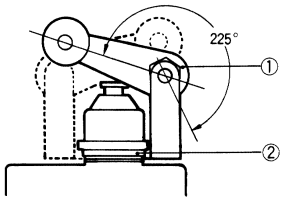

A dedicated wrench is provided separately.

Model: SUPANA FOR ZE

Make sure that the nut is free of foreign substances when the nut is loosened.

ALL DIMENSIONS SHOWN ARE IN MILLIMETERS.

To convert millimeters into inches, multiply by 0.03937. To convert grams into ounces, multiply by 0.03527.

Cat. No. C020-E1-09 In the interest of product improvement, specifications are subject to change without notice.