Product data sheet

Specifications



Head for selector switch, Harmony XB6, illuminated Ø 16 3 position spring return

ZB6AD05

Product availability : Non-Stock - Not normally stocked in distribution facility

Price* : 13.40 USD

Main

Range of Product	Harmony XB6
Product or Component Type	Head for selector switch
Device short name	ZB6
Bezel material	Plastic
Mounting diameter	0.63 in (16 mm)
Sale per indivisible quantity	1
Shape of signaling unit head	Round
Type of operator	To centre spring return
Operator profile	without handle
Operator position information	3 positions 45°

Complementary

CAD overall width	0.71 in (18 mm)
CAD overall height	0.71 in (18 mm)
Net Weight	0.04 lb(US) (0.016 kg)

Environment

Protective treatment	TC
Ambient Air Temperature for Storage	-40…158 °F (-40…70 °C)
Ambient air temperature for operation	-13…158 °F (-25…70 °C)
Electrical shock protection class	Class II IEC 61140
IP degree of protection	IP65 IEC 60529
NEMA degree of protection	NEMA 13 UL 50 NEMA 4 UL 50 NEMA 4X UL 50 NEMA 13 CSA C22.2 No 94 NEMA 4 CSA C22.2 No 94 NEMA 4X CSA C22.2 No 94
Standards	JIS C 852 JIS C8201-5-1 UL 508

* Price is “List Price” and may be subject to a trade discount – check with your local distributor or retailer for actual price.

Disclaimer: This documentation is not intended as a substitute for and is not to be used for determining suitability or reliability of these products for specific user applications

	EN/IEC 60947-5-5 EN/IEC 60947-5-1 EN/IEC 60947-1 CSA C22.2 No 14 JIS C8201-1
Product Certifications	GOST CSA UL CCC
Vibration resistance	+/- 3 mm 2…500 Hz)IEC 60068-2-6 5 gn 2…500 Hz)IEC 60068-2-6
Shock resistance	30 gn 18 ms) half sine wave acceleration IEC 60068-2-27 50 gn 11 ms) half sine wave acceleration IEC 60068-2-27

Ordering and shipping details

Category	22459 - PUSHBUTTONS, 16MM
Discount Schedule	CS2
GTIN	3389110777130
Nbr. of units in pkg.	1
Package weight(Lbs)	0.21 oz (6 g)
Returnability	No
Country of origin	ES

Packing Units

Unit Type of Package 1	PCE
Package 1 Height	0.67 in (1.7 cm)
Package 1 width	0.67 in (1.7 cm)
Package 1 Length	1.26 in (3.2 cm)
Unit Type of Package 2	BB2
Number of Units in Package 2	5
Package 2 Weight	1.41 oz (40 g)
Package 2 Height	4.53 in (11.5 cm)
Package 2 width	1.61 in (4.1 cm)
Package 2 Length	4.33 in (11 cm)
Unit Type of Package 3	BB1
Number of Units in Package 3	5
Package 3 Weight	1.41 oz (40 g)
Package 3 Height	4.53 in (11.5 cm)
Package 3 width	1.61 in (4.1 cm)
Package 3 Length	4.33 in (11 cm)

Offer Sustainability

Sustainable offer status	Green Premium product
California proposition 65	WARNING: This product can expose you to chemicals including: Di-isodecyl phthalate (DIDP), which is known to the State of California to cause birth defects or other reproductive harm. For more information go to www.P65Warnings.ca.gov
REACh Regulation	REACh Declaration
REACh free of SVHC	Yes
EU RoHS Directive	Pro-active compliance (Product out of EU RoHS legal scope) EU RoHS Declaration

Toxic heavy metal free	Yes
Mercury free	Yes
RoHS exemption information	Yes
China RoHS Regulation	China RoHS declaration
Environmental Disclosure	Product Environmental Profile
Circularity Profile	End of Life Information

Contractual warranty

Warranty	18 months

Product data sheet ZB6AD05

Dimensions Drawings

Circular Head for Selector Switch, Standard Handle

Dimensions

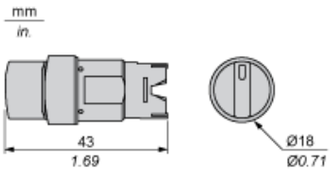

Panel Cut-out

For Square or Circular Head

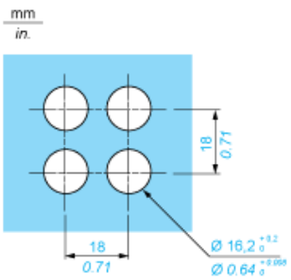

Product data sheet ZB6AD05

Mounting and Clearance

Pushbuttons, Switches and Pilot Lights for Printed Circuit Board Connection

Front Panel Cut-out (Viewed from Installer's Side)

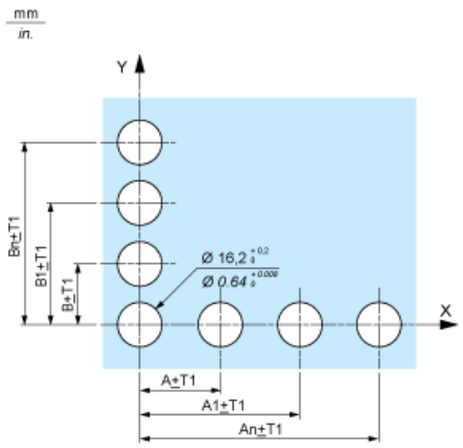

Printed Circuit Board Drillings (Viewed from Electrical Block Side)

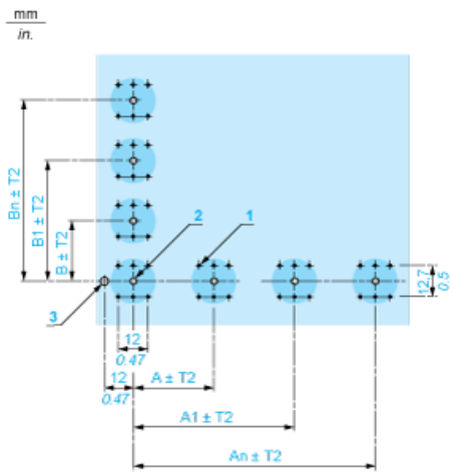

A 24 mm/0.94 in. minimum for rectangular heads, 18 mm/0.71 in. minimum for square or circular heads
B 18 mm/0.71 in. minimum
(1) 6 x Ø 1.1 mm / 6 x Ø 0.04 in. holes.
(2) 1 x Ø $2.6^{0}_{-0.2}$ mm / 1 x Ø $0.10^{0}_{-0.008}$ in. hole for locating pin, only when using socket adaptor ZB6Y010.
(3) 1 x Ø $3.2^{0}_{-0.2}$ mm / 1 x Ø $0.13^{0}_{-0.008}$ in. hole for fixing of printed circuit board onto the front panel using body bracket ZB6Y011. This hole must be

General tolerances of the panel and printed circuit board: T1, T2: T1 + T2 = 0.3 mm/0.01 in. maximum.

Installation precautions:

Thickness of printed circuit board: 1.6 mm/0.06 in. minimum.

Mounting with Body Bracket

With socket adaptor ZB6Y010

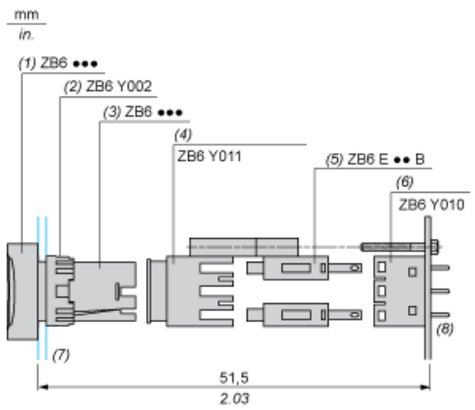

(1) Head
(2) Nut
(3) Body
(4) Body bracket
(5) Contact block
(6) Socket adaptor
(7) Panel
(8) Printed circuit

Direct mounting without socket adaptor ZB6Y010

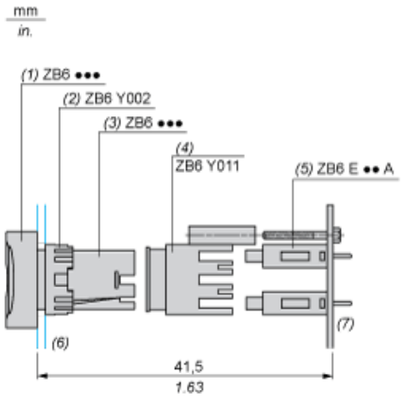

(1) Head
(2) Nut
(3) Body
(4) Body bracket
(5) Contact block
(6) Panel
(7) Printed circuit