# Product data sheet

Specifications



## Head for non illuminated push button, Harmony XB6, red flush pushbutton Ø 16 spring return unmarked

ZB6AA4

**Product availability : Non-Stock - Not normally stocked in distribution facility**

## Price* : 14.40 USD

### Main

| | |
|---|---|
| **Range of Product** | Harmony XB6 |
| **Product or Component Type** | Head for non-illuminated push-button |
| **Device short name** | ZB6 |
| **Bezel material** | Plastic |
| **Mounting diameter** | 0.63 in (16 mm) |
| **Sale per indivisible quantity** | 1 |
| **Shape of signaling unit head** | Round |
| **Type of operator** | spring return |
| **Operator profile** | Red flush, unmarked |

### Complementary

| | |
|---|---|
| **CAD overall width** | 0.71 in (18 mm) |
| **CAD overall height** | 0.71 in (18 mm) |
| **CAD overall depth** | 1.30 in (33 mm) |
| **Net Weight** | 0.04 lb(US) (0.016 kg) |

### Environment

| | |
|---|---|
| **Protective treatment** | TC |
| **Ambient Air Temperature for Storage** | -40…158 °F (-40…70 °C) |
| **Ambient air temperature for operation** | -13…158 °F (-25…70 °C) |
| **Electrical shock protection class** | Class II IEC 61140 |
| **IP degree of protection** | IP65 IEC 60529 |
| **NEMA degree of protection** | NEMA 13 UL 50<br>NEMA 4 UL 50<br>NEMA 4X UL 50<br>NEMA 13 CSA C22.2 No 94<br>NEMA 4 CSA C22.2 No 94<br>NEMA 4X CSA C22.2 No 94 |
| **Standards** | UL 508 |

* Price is “List Price” and may be subject to a trade discount – check with your local distributor or retailer for actual price.

Disclaimer: This documentation is not intended as a substitute for and is not to be used for determining suitability or reliability of these products for specific user applications

| | |
|---|---|
| | EN/IEC 60947-5-1<br>CSA C22.2 No 14<br>JIS C8201-5-1<br>EN/IEC 60947-5-5<br>EN/IEC 60947-1<br>JIS C 852<br>JIS C8201-1 |
| **Product Certifications** | UL<br>CSA<br>GOST<br>CCC |
| **Vibration resistance** | +/- 3 mm 2…500 Hz)IEC 60068-2-6<br>5 gn 2…500 Hz)IEC 60068-2-6 |
| **Shock resistance** | 30 gn 18 ms) half sine wave acceleration IEC 60068-2-27<br>50 gn 11 ms) half sine wave acceleration IEC 60068-2-27 |

## Ordering and shipping details

| | |
|---|---|
| **Category** | 22459 - PUSHBUTTONS, 16MM |
| **Discount Schedule** | CS2 |
| **GTIN** | 3389110775402 |
| **Nbr. of units in pkg.** | 1 |
| **Package weight(Lbs)** | 0.28 oz (8 g) |
| **Returnability** | No |
| **Country of origin** | ES |

## Packing Units

| | |
|---|---|
| **Unit Type of Package 1** | PCE |
| **Package 1 Height** | 0.91 in (2.3 cm) |
| **Package 1 width** | 1.18 in (3 cm) |
| **Package 1 Length** | 1.97 in (5 cm) |
| **Unit Type of Package 2** | S01 |
| **Number of Units in Package 2** | 60 |
| **Package 2 Weight** | 22.86 oz (648 g) |
| **Package 2 Height** | 5.91 in (15 cm) |
| **Package 2 width** | 5.91 in (15 cm) |
| **Package 2 Length** | 15.75 in (40 cm) |

## Offer Sustainability

| | |
|---|---|
| **Sustainable offer status** | Green Premium product |
| **California proposition 65** | WARNING: This product can expose you to chemicals including: Di-isodecyl phthalate (DIDP), which is known to the State of California to cause birth defects or other reproductive harm. For more information go to www.P65Warnings.ca.gov |
| **REACh Regulation** | REACh Declaration |
| **REACh free of SVHC** | Yes |
| **EU RoHS Directive** | Pro-active compliance (Product out of EU RoHS legal scope)<br>EU RoHS Declaration |
| **Toxic heavy metal free** | Yes |
| **Mercury free** | Yes |
| **RoHS exemption information** | Yes |
| **China RoHS Regulation** | China RoHS declaration |
| **Environmental Disclosure** | Product Environmental Profile |

| | |
|---|---|
| **Circularity Profile** | End of Life Information |

## Contractual warranty

| | |
|---|---|
| **Warranty** | 18 months |

# Product data sheet ZB6AA4

Dimensions Drawings

## Circular Head for Illuminated or Non Illuminated Pushbutton

### Dimensions

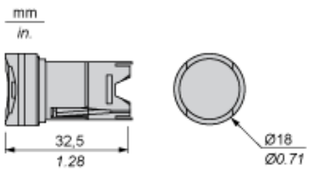

## Panel Cut-out

### For Square or Circular Head

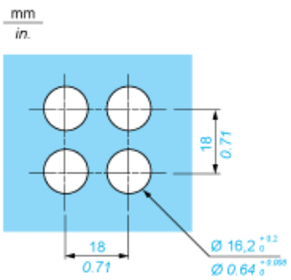

# Product data sheet ZB6AA4

Mounting and Clearance

## Pushbuttons, Switches and Pilot Lights for Printed Circuit Board Connection

### Front Panel Cut-out (Viewed from Installer's Side)

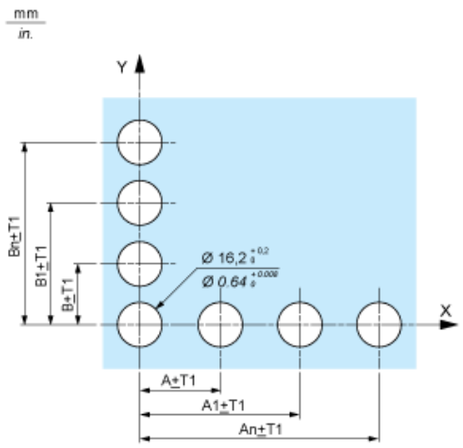


### Printed Circuit Board Drillings (Viewed from Electrical Block Side)

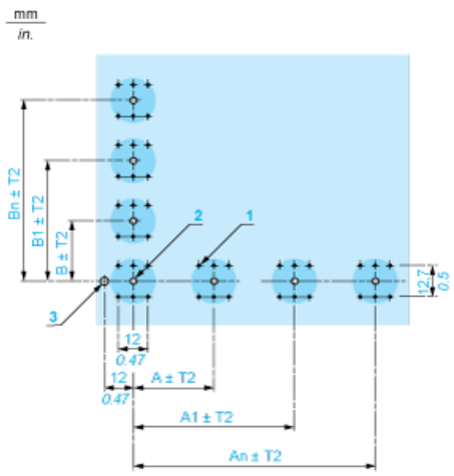


**A** 24 mm/0.94 in. minimum for rectangular heads, 18 mm/0.71 in. minimum for square or circular heads
**B** 18 mm/0.71 in. minimum
**(1)** 6 x Ø 1.1 mm / 6 x Ø 0.04 in. holes.
**(2)** 1 x Ø $2.6^{0}_{-0.2}$ mm / 1 x Ø $0.10^{0}_{-0.008}$ in. hole for locating pin, only when using socket adaptor ZB6Y010.
**(3)** 1 x Ø $3.2^{0}_{-0.2}$ mm / 1 x Ø $0.13^{0}_{-0.008}$ in. hole for fixing of printed circuit board onto the front panel using body bracket ZB6Y011. This hole must be

**General tolerances of the panel and printed circuit board: T1, T2: T1 + T2 = 0.3 mm/0.01 in. maximum.**

**Installation precautions:**

Thickness of printed circuit board: 1.6 mm/0.06 in. minimum.

### Mounting with Body Bracket

**With socket adaptor ZB6Y010**

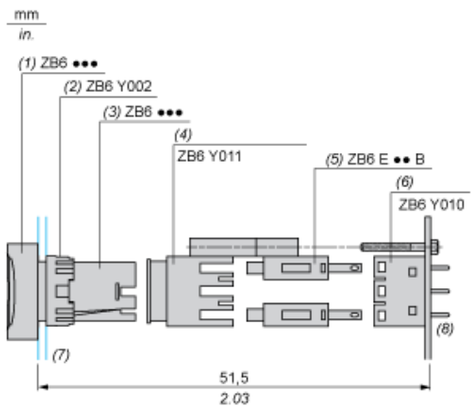


**(1)** Head
**(2)** Nut
**(3)** Body
**(4)** Body bracket
**(5)** Contact block
**(6)** Socket adaptor
**(7)** Panel
**(8)** Printed circuit

**Direct mounting without socket adaptor ZB6Y010**

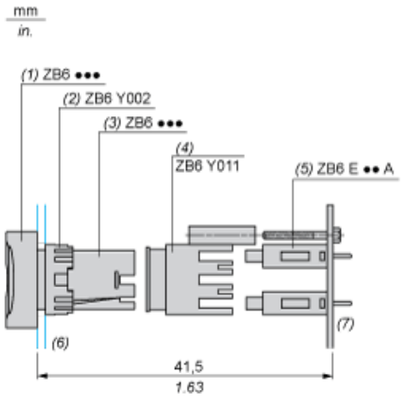


**(1)** Head
**(2)** Nut
**(3)** Body
**(4)** Body bracket
**(5)** Contact block
**(6)** Panel
**(7)** Printed circuit