Product data sheet

Specifications



Head for non illuminated push button, Harmony XB5, green square flush pushbutton Ø22 mm spring return unmarked

ZB5CA3

Product availability : Stock - Normally stocked in distribution facility

Price* : 27.00 USD

Main

Range of Product	Harmony XB5
Product or Component Type	Head for non-illuminated push-button
Device short name	ZB5
Bezel material	Dark grey plastic
Mounting diameter	0.87 in (22 mm)
Head type	Standard
Sale per indivisible quantity	1
Shape of signaling unit head	Square
Type of operator	spring return
Operator profile	Green flush, unmarked

Complementary

CAD overall width	1.18 in (30 mm)
CAD overall height	1.18 in (30 mm)
CAD overall depth	1.10 in (28 mm)
Net weight	0.04 lb(US) (0.019 kg)
Mechanical durability	5000000 cycles
Station name	XALD 1...5 cut-outs XALK 2...5 cut-outs
Electrical composition code	C1 9 single front mounting C2 9 single and double front mounting C11 3 single front mounting C15 1 single front mounting SF1 3 single front mounting SR1 3 single rear mounting
Device presentation	Basic element

Environment

Protective treatment	TH
Ambient Air Temperature for Storage	-40…158 °F (-40…70 °C)

* Price is “List Price” and may be subject to a trade discount – check with your local distributor or retailer for actual price.

Disclaimer: This documentation is not intended as a substitute for and is not to be used for determining suitability or reliability of these products for specific user applications

Ambient Air Temperature for Operation	-13…158 °F (-25…70 °C)
Overvoltage category	Class II IEC 60536
IP degree of protection	IP66 IEC 60529
NEMA degree of protection	NEMA 13 NEMA 4X
Resistance to high pressure washer	1015.26 psi (7000000 Pa) 131 °F (55 °C) 0.1 m
IK degree of protection	IK03 IEC 50102
Product certifications	BV CSA DNV GL UL Listed LROS (Lloyds register of shipping)
Shock resistance	30 gn 18 ms) half sine wave acceleration IEC 60068-2-27 50 gn 11 ms) half sine wave acceleration IEC 60068-2-27
Vibration resistance	5 gn 2…500 Hz)IEC 60068-2-6

Ordering and shipping details

Category	22467-PUSHBUTTONS,22MM(PLASTIC) NEW
Discount Schedule	CS2
GTIN	3389110925876
Nbr. of units in pkg.	1
Package weight(Lbs)	0.67 oz (19 g)
Returnability	No
Country of origin	FR

Packing Units

Unit Type of Package 1	PCE
Package 1 Height	1.42 in (3.6 cm)
Package 1 width	1.85 in (4.7 cm)
Package 1 Length	2.09 in (5.3 cm)
Unit Type of Package 2	BB1
Number of Units in Package 2	5
Package 2 Weight	3.53 oz (100 g)
Package 2 Height	1.77 in (4.5 cm)
Package 2 width	10.43 in (26.5 cm)
Package 2 Length	1.34 in (3.4 cm)
Unit Type of Package 3	S03
Number of Units in Package 3	300
Package 3 Weight	14.44 lb(US) (6.549 kg)
Package 3 Height	11.81 in (30 cm)
Package 3 width	11.81 in (30 cm)
Package 3 Length	15.75 in (40 cm)

Offer Sustainability

Sustainable offer status	Green Premium product

California proposition 65	WARNING: This product can expose you to chemicals including: Di-isodecyl phthalate (DIDP), which is known to the State of California to cause birth defects or other reproductive harm. For more information go to www.P65Warnings.ca.gov
REACh Regulation	REACh Declaration
REACh free of SVHC	Yes
EU RoHS Directive	Pro-active compliance (Product out of EU RoHS legal scope) EU RoHS Declaration
Toxic heavy metal free	Yes
Mercury free	Yes
RoHS exemption information	Yes
China RoHS Regulation	China RoHS declaration
Environmental Disclosure	Product Environmental Profile
Circularity Profile	End of Life Information

Contractual warranty

Warranty	18 months

Product data sheet ZB5CA3

Dimensions Drawings

Dimensions

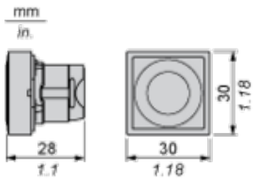

Product data sheet ZB5CA3

Mounting and Clearance

Panel Cut-out for Pushbuttons, Switches and Pilot Lights (Finished Holes, Ready for Installation)

Connection by Screw Clamp Terminals or Plug-in Connectors or on Printed Circuit Board

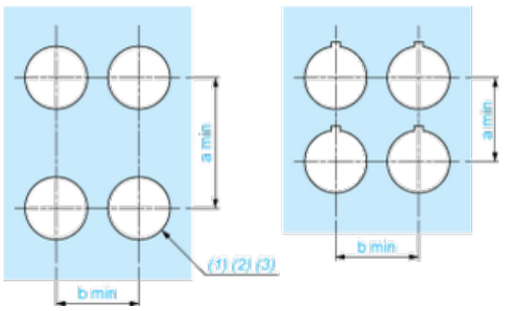

(1) Diameter on finished panel or support

(2) For selector switches and Emergency stop buttons, use of an anti-rotation plate type ZB5AZ902 is recommended.

(3) Ø22.5 mm recommended (Ø22.3 $_{0}^{+0.4}$) / Ø0.89 in. recommended (Ø0.88 in. $_{0}^{+0.016}$)

Connections	a in mm	a in in.	b in mm	b in in.
By screw clamp terminals or plug-in connector	40	1.57	30	1.18
By Faston connectors	45	1.77	32	1.26
On printed circuit board	30	1.18	30	1.18

Detail of Lug Recess

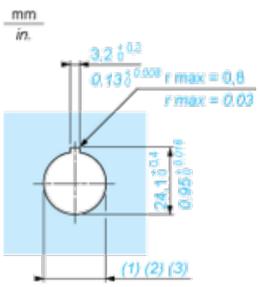

(1) Diameter on finished panel or support

(2) For selector switches and Emergency stop buttons, use of an anti-rotation plate type ZB5AZ902 is recommended.

(3) Ø22.5 mm recommended (Ø22.3 $_{0}^{+0.4}$) / Ø0.89 in. recommended (Ø0.88 in. $_{0}^{+0.016}$)

Pushbuttons, Switches and Pilot Lights for Printed Circuit Board Connection

Panel Cut-outs (Viewed from Installer's Side)

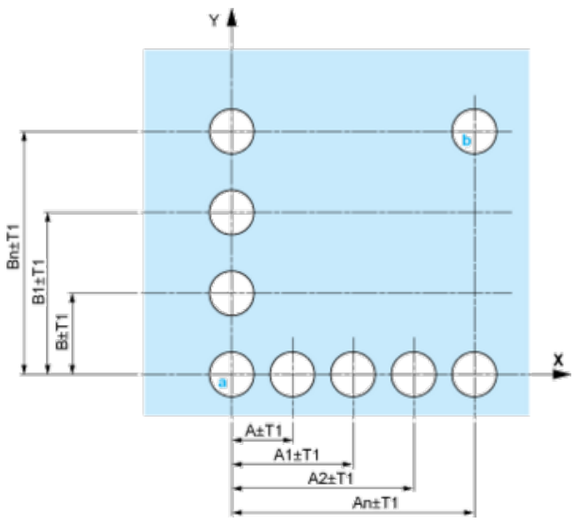

A: 30 mm min. / 1.18 in. min.

B: 40 mm min. / 1.57 in. min.

Printed Circuit Board Cut-outs (Viewed from Electrical Block Side)

Dimensions in mm

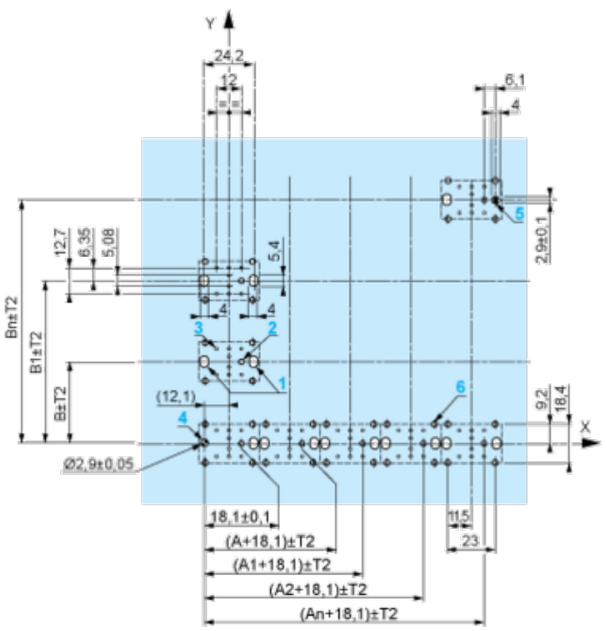

A: 30 mm min.

B: 40 mm min.

Dimensions in in.

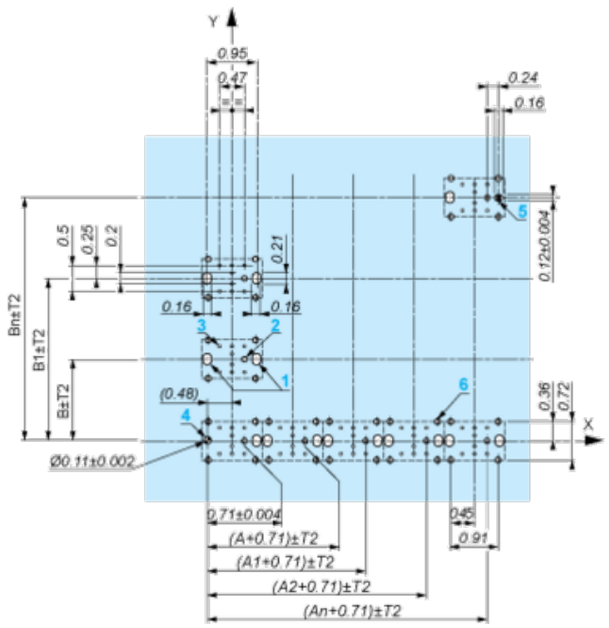

A: 1.18 in. min.

B: 1.57 in. min.

General Tolerances of the Panel and Printed Circuit Board

The cumulative tolerance must not exceed 0.3 mm / 0.012 in.: T1 + T2 = 0.3 mm max.

Installation Precautions

- Minimum thickness of circuit board: 1.6 mm / 0.06 in.
- Cut-out diameter: 22.4 mm ± 0.1 / 0.88 in. ± 0.004
- Orientation of body/fixing collar ZB5AZ009: ± 2°30' (excluding cut-outs marked **a** and **b**).
- Tightening torque of screws ZBZ006: 0.6 N.m (5.3 lbf.in) max.
- Allow for one ZB5AZ079 fixing collar/pillar and its fixing screws:
  - every 90 mm / 3.54 in. horizontally (X), and 120 mm / 4.72 in. vertically (Y).
  - with each selector switch head (ZB5AD•, ZB5AJ•, ZB5AG•).

The fixing centers marked **a** and **b** are diagonally opposed and must align with those marked **4** and **5**.

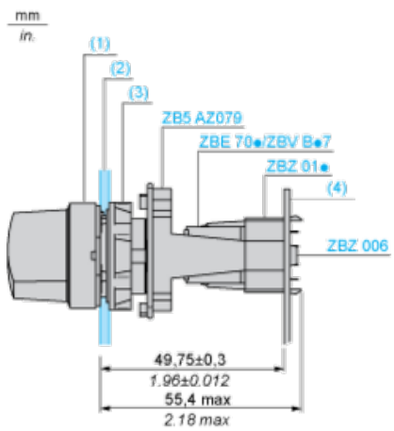

(1) Head ZB5AD•

(2) Panel

(2) Nut

(4) Printed circuit board

Mounting of Adapter (Socket) ZBZ01•

- **1** 2 elongated holes for ZBZ006 screw access
- **2** 1 hole Ø 2.4 mm ± 0.05 / 0.09 in. ± 0.002 for centring adapter ZBZ01•
- **3** 8 × Ø 1.2 mm / 0.05 in. holes
- **4** 1 hole Ø 2.9 mm ± 0.05 / 0.11 in. ± 0.002, for aligning the printed circuit board (with cut-out marked **a**)
- **5** 1 elongated hole for aligning the printed circuit board (with cut-out marked **b**)
- **6** 4 holes Ø 2.4 mm / 0.09 in. for clipping in adapter ZBZ01•

Dimensions An + 18.1 relate to the Ø 2.4 mm ± 0.05 / 0.09 in. ± 0.002 holes for centring adapter ZBZ01•.

Electrical Composition Corresponding to Code C1

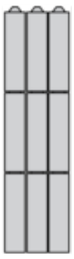

Electrical Composition Corresponding to Code C2

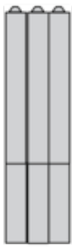

Electrical Composition Corresponding to Codes C9, C11, SF1 and SR1

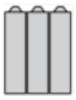

Electrical Composition Corresponding to Code C15

1 N/O

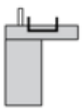

1 N/C

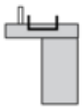

1 N/O + N/C or 1 N/O + N/O or 1 N/C + N/C

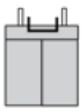

Legend

Single contact



Double contact



Light block



Possible location

