Product data sheet
Characteristics

ZB4FA342
Head for non illuminated push button, Harmony XB4, flush mounted green flush caps pushbutton white marked marche

Product availability : Non-Stock - Not normally stocked in distribution facility

Green Premium™

Price* : 18.90 USD



Main

Range of product	Harmony XB4
Product or Component Type	Head for non-illuminated push-button
Device short name	ZB4F
Bezel material	Chromium plated metal
Mounting diameter	1.20 in (30.5 mm)
Sale per indivisible quantity	1
Head type	Built-in-flush
Shape of signaling unit head	Round
Type of operator	spring return
Operator profile	Green flush, MARCHE white)

Complementary

CAD overall width	1.44 in (36.6 mm)
CAD overall height	1.44 in (36.6 mm)
CAD overall depth	1.22 in (31 mm)
Mechanical durability	10000000 cycles
Electrical composition code	C1 9 single front mounting C2 9 single and double front mounting C11 3 single front mounting C15 1 single front mounting
Device presentation	Basic element

Environment

Protective treatment	TH

* Price is “List Price” and may be subject to a trade discount – check with your local distributor or retailer for actual price.

Disclaimer: This documentation is not intended as a substitute for and is not to be used for determining suitability or reliability of these products for specific user applications

Ambient Air Temperature for Storage	-40…158 °F (-40…70 °C)
Ambient Air Temperature for Operation	-40…158 °F (-40…70 °C)
Overvoltage category	Class I IEC 60536
IP degree of protection	IP66 IEC 60529 IP67 IEC 60529 IP69 IEC 60529 IP69K ISO 20653 Type 13 UL 50E Type 12 UL 50E Type 4 UL 50E Type 4X UL 50E
IK degree of protection	IK06 IEC 50102
Standards	CSA C22.2 No 14 EN/IEC 60947-5-1 EN/IEC 60947-5-4 UL 508 EN/IEC 60947-1 JIS C8201-5-1 CE JIS C8201-1
Product Certifications	UL Listed CSA CCC EAC
Vibration resistance	5 gn 10…500 Hz)IEC 60068-2-6 25 mm peak to peak 2…10 Hz)IEC 60068-2-6
Shock resistance	30 gn 18 ms) half sine wave acceleration IEC 60068-2-27 50 gn 11 ms) half sine wave acceleration IEC 60068-2-27 25 gn 6 ms) 1000 shocks on each axis IEC 60068-2-27

Ordering and shipping details

Category	22468 - PUSHBUTTONS,22MM(METAL) NEW
Discount Schedule	CS2
GTIN	3606489581022
Nbr. of units in pkg.	1
Package weight(Lbs)	2.05 oz (58 g)
Returnability	No

Packing Units

Unit Type of Package 1	PCE
Package 1 Height	1.69 in (4.3 cm)
Package 1 width	2.05 in (5.2 cm)
Package 1 Length	2.17 in (5.5 cm)

Offer Sustainability

Sustainable offer status	Green Premium product
California proposition 65	WARNING: This product can expose you to chemicals including: Di-isodecyl phthalate (DIDP), which is known to the State of California to cause birth defects or other reproductive harm. For more information go to www.P65Warnings.ca.gov
REACh Regulation	REACh Declaration
REACh free of SVHC	Yes
EU RoHS Directive	Pro-active compliance (Product out of EU RoHS legal scope) EU RoHS Declaration
Toxic heavy metal free	Yes
Mercury free	Yes
RoHS exemption information	Yes
China RoHS Regulation	China RoHS declaration
Environmental Disclosure	Product Environmental Profile

Circularity Profile	End of Life Information

Contractual warranty

Warranty	18 months

Dimensions

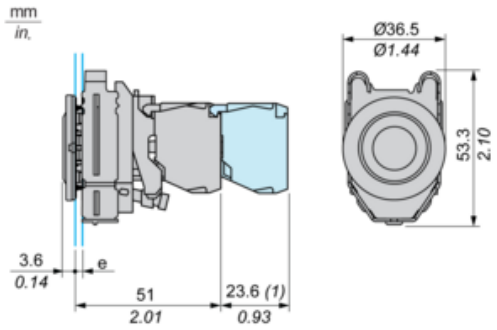

e : clamping thickness: 1 to 6 mm / 0.04 to 0.24 in.

(1) : Additional row of contacts

Panel Cut-out for Pushbuttons, Switches and Pilot Lights (Finished Holes, Ready for Installation)

Connection by Screw Clamp Terminals or Plug-in Connectors

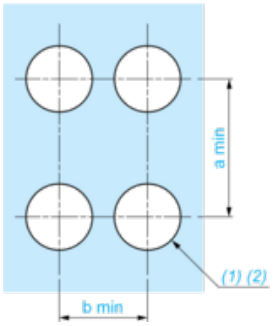

(1) : Diameter on finished panel or support

(2) : Ø30.75 mm recommended (Ø30.5 $_{0}^{+0.5}$) / Ø1.21 in. recommended (Ø1.20 in. $_{0}^{+0.0196}$)

Connections	a in mm	a in in.	b in mm	b in in.
By connectors	50	1.97	40	1.57
By connectors and with legend holder ZBZF32	50	1.97	40	1.57
By connectors and with legend holder ZBZF33	60	2.36	40	1.57

Electrical Composition Corresponding to Code C1

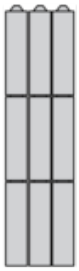

Electrical Composition Corresponding to Code C2

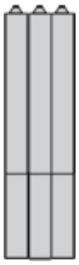

Electrical Composition Corresponding to Codes C9, C11, SF1 and SR1



Electrical Composition Corresponding to Code C15

1 N/O



1 N/C



1 N/O + N/C or 1 N/O + N/O or 1 N/C + N/C

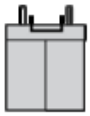

Legend

Single contact



Double contact



Light block



Possible location

