ZA-2075-8

The ZA-2075-8 filter has been designed for systems operating under the requirements of MIL-STD-461C and/or tempest applications.

The filter's case is environmentally sealed and is designed to handle the shock and vibration of wheeled vehicle installations.

The circuit uses "Feed-Through Capacitors" with an insertion loss of 60 db to 1.0 Ghz and beyond.

The circuit also uses a MOV to reduce line transients.

Order P/N: ZA-2075-8

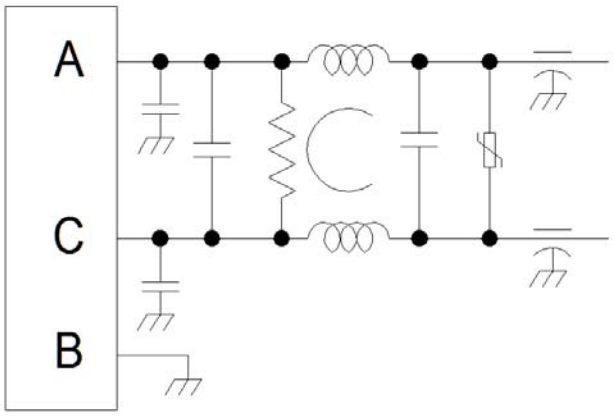

Operating Voltage = _____185 VDC, Max.
Operating Current = _____8.0 Amps

Temperature Range (Storage) = _____-40 to 85°C
Temperature Range (Operating) = _____ -40 to 70°C

Diel. Withstand (L-Grd) = _____ 1500 VDC
Diel. Withstand (L-L) (1 Minute) = _____375 VDC

Calculated MTBF = _____3,569,478 Hrs

INSERTION LOSS vs. FREQUENCY

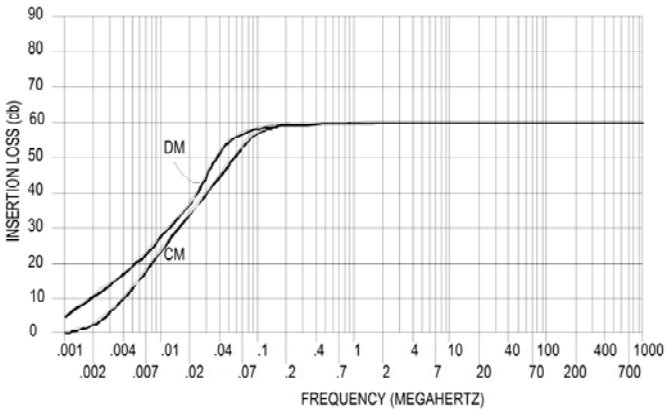

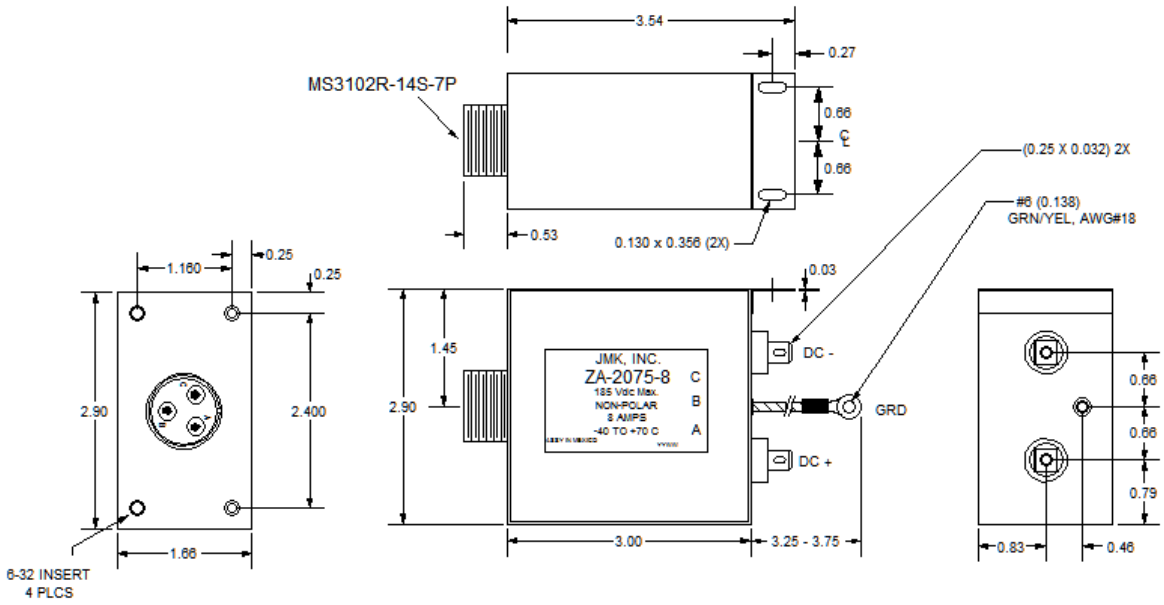

USA JMK Inc 15 Caldwell Dr. Amherst, NH 03031 PH: 603 886-4100 FX: 603 886-4115
email: info@jmkfilters.com
EUR JMK Inc Glasgow G13 1DN Scotland UK PH: 44-(0) 7785310729 Fax: 44-(0) 141 589 1884