Z86L70/71/75/C71

IR/LOW-VOLTAGE MICROCONTROLLER

FEATURES

Part	ROM (KB)	RAM* (Bytes)	I/O	Voltage Ranges
Z86L70	2	125	14	2.0V to 3.9V
Z86L71	8	237	16	2.0V to 3.9V
Z86L75	4	237	14	2.0V to 3.9V
Z86C71	8	237	16	4.5V to 5.5V

Note: *General-Purpose

- Two Standby Modes (Typical)
  - STOP - 2 µA
  - HALT - 0.8 mA
- Special Architecture to Automate Both Generation and Reception of Complex Pulses or Signals:
  - One Programmable 8-Bit Counter/Timer with Two Capture Registers
  - One Programmable 16-Bit Counter/Timer with One Capture Register
  - Programmable Input Glitch Filter for Pulse Reception
- Five Priority Interrupts
- Low Voltage Detection and Protection
- Programmable Watch-Dog/Power-On Reset Circuits
- Two Independent Comparators with Programmable Interrupt Polarity
- On-Chip Oscillator that Accepts a Crystal, Ceramic Resonator, LC, RC (mask option), or External Clock Drive
- Mask Selectable 200 KOhm Pull-Ups on Ports 0, 2, 3

GENERAL DESCRIPTION

The Z86L7X family of IR (Infrared)/Low-Voltage Microcontrollers are ROM/ROMless-based members of the Z8® MCU single-chip family with 237/125 bytes of internal RAM. The differentiating factor between these devices is the availability of RAM, ROM and package options. Offering the 3V versions (Z86LXX) with the Z86C71 gives optimum performance in both the low and high voltage ranges. Zilog's CMOS Low-Voltage Microcontrollers offer fast execution, efficient use of memory, sophisticated interrupts, input/output bit manipulation capabilities, automated pulse generation/reception, and internal key-scan pull-up resistors. The Z86L7X product line offers easy hardware/software system expansion with cost-effective and low power consumption.

The Z86L7X architecture is based on Zilog's 8-bit microcontroller core with an Expanded Register File to allow access to register mapped peripherals, I/O circuits, and powerful counter/timer circuitry. The Z8® MCU offers a flexible I/O scheme, an efficient register and address space structure, and a number of ancillary features that are useful in many consumer, automotive, computer peripheral, and battery operated hand-held applications.

There are three basic address spaces available to support a wide range of configurations: Program Memory, Register File, and Expanded Register File. The register file is composed of 256/144 bytes of RAM. It includes four I/O port registers, 15 control and status registers and the rest are General-Purpose registers. The Expanded Register File consists of two additional register groups (F and D). External Memory is not available on 18 and 20-pin versions.

GENERAL DESCRIPTION (Continued)

To unburden the program from coping with such real-time problems as generating complex waveforms or receiving and demodulating complex waveform/pulses, the Z86L7X family offers a new intelligent counter/timer architecture with 8-bit and 16-bit counter/timers (Figure 1). Also included are a large number of user-selectable modes, and two on-board comparators to process analog signals (Figure 2).

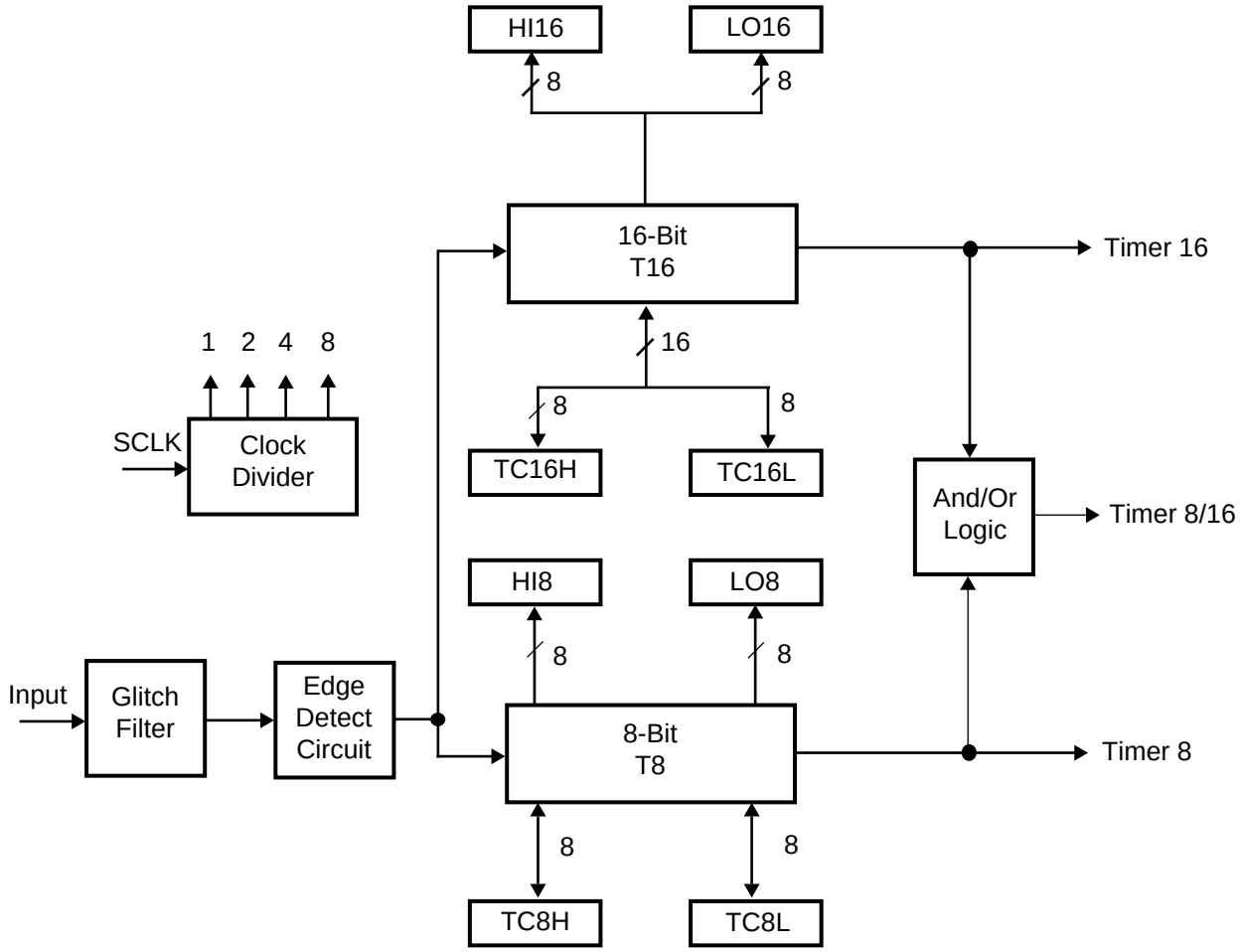

Figure 1. Counter/Timer Block Diagram

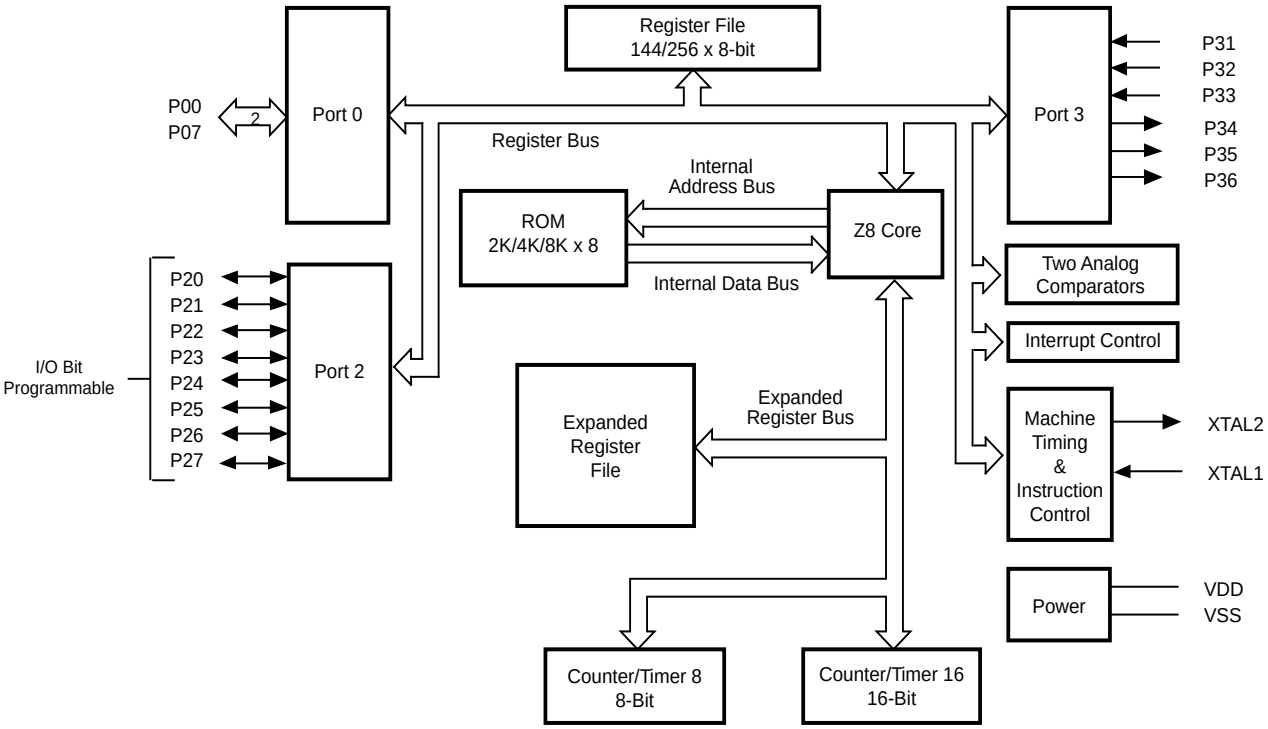

Figure 2. Functional Block Diagram

Note: All Signals with a preceding front slash, "/", are active Low, for example, B//W (WORD is active Low); /B/W (BYTE is active Low, only).

Power connections follow conventional descriptions below:

Connection	Circuit	Device
Power	V_{CC}	V_{DD}
Ground	GND	V_{SS}

PIN DESCRIPTION

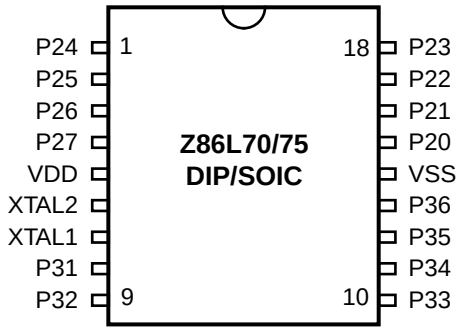

Figure 3. 18-Pin DIP/SOIC Pin Assignments

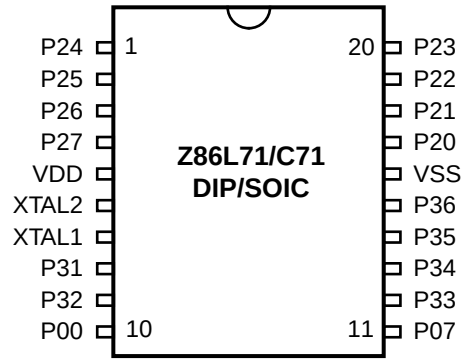

Figure 4. 20-Pin DIP/SOIC Pin Assignments

Table 1. Pin Identification

20-Pin DIP & SOIC	18-Pin DIP & SOIC	Symbol	Direction	Description
10		P00	Input/Output	Port 0 pins are individually configurable as
11		P07	Input/Output	input or output.
17	15	P20	Input/Output	Port 2 pins are individually configurable as
18	16	P21	Input/Output	input or output.
19	17	P22	Input/Output	
20	18	P23	Input/Output	
1	1	P24	Input/Output	
2	2	P25	Input/Output	
3	3	P26	Input/Output	
4	4	P27	Input/Output	
8	8	P31	Input	IRQ2/Modulator Input
9	9	P32	Input	IRQ0
12	10	P33	Input	IRQ1
13	11	P34	Output	T8 output
14	12	P35	Output	T16 output
15	13	P36	Output	T8/T16 output
7	7	XTAL1	Input	Crystal, Oscillator Clock
6	6	XTAL2	Output	Crystal, Oscillator Clock
5	5	V_{DD}		Power Supply
16	14	V_{SS}		Ground

ABSOLUTE MAXIMUM RATINGS

Symbol	Description	Min	Max	Units
V_{CC}	Supply Voltage (*)	-0.3	+7.0	V
T_{STG}	Storage Temp.	-65°	+150°	C
T_A	Oper. Ambient Temp.		†	C

Notes:
* Voltage on all pins with respect to GND.
† See Ordering Information

Stresses greater than those listed under Absolute Maximum Ratings may cause permanent damage to the device. This is a stress rating only; operation of the device at any condition above those indicated in the operational sections of these specifications is not implied. Exposure to absolute maximum rating conditions for an extended period may affect device reliability.

STANDARD TEST CONDITIONS

The characteristics listed below apply for standard test conditions as noted. All voltages are referenced to GND. Positive current flows into the referenced pin (Figure 5).

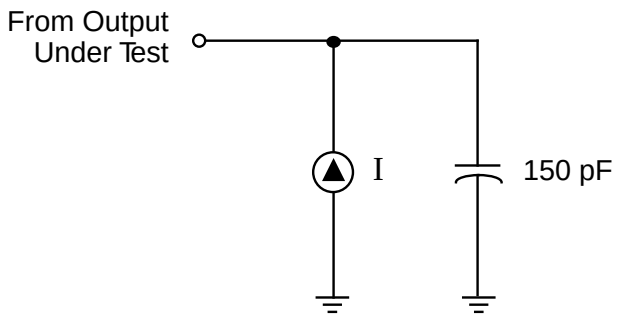

Figure 5. Test Load Diagram

CAPACITANCE

T_A = 25°C, V_{CC} = GND = 0V, f = 1.0 MHz, unmeasured pins returned to GND.

Parameter	Max
Input capacitance	12 pF
Output capacitance	12 pF
I/O capacitance	12 pF

DC CHARACTERISTICS (Z86L70/71/75 LOW VOLTAGE SPECIFICATIONS)

Preliminary

Sym	Parameter	V_{CC}	T_A = 0°C to +70°C Min	Max	Typ @ 25°C	Units	Conditions	Notes
	Max Input Voltage	2.0V		7		V	I_{IN} <250 µA	
		3.9V		7		V	I_{IN} <250 µA	
V_{CH}	Clock Input High Voltage	2.0V	0.8 V_{CC}	V_{CC} + 0.3		V	Driven by External Clock Generator	
		3.9V	0.8 V_{CC}	V_{CC} + 0.3		V	Driven by External Clock Generator	
V_{CL}	Clock Input Low Voltage	2.0V	V_{SS} – 0.3	0.2 V_{CC}		V	Driven by External Clock Generator	
		3.9V	V_{SS}– 0.3	0.2 V_{CC}		V	Driven by External Clock Generator	
V_{IH}	Input High Voltage	2.0V	0.7 V_{CC}	V_{CC} + 0.3	0.5V_{CC}	V		
		3.9V	0.7 V_{CC}	V_{CC} + 0.3	0.5V_{CC}	V		
V_{IL}	Input Low Voltage	2.0V	V_{SS} – 0.3	0.2 V_{CC}	0.5V_{CC}	V		
		3.9V	V_{SS} – 0.3	0.2 V_{CC}	0.5V_{CC}	V		
V_{OH1}	Output High Voltage	2.0V	V_{CC} – 0.4		1.7	V	I_{OH} = –0.5 mA	
		3.9V	V_{CC} – 0.4		3.7	V	I_{OH} = –0.5 mA	
V_{OH2}	Output High Voltage (P36, P37,P00, P01)	2.0V	V_{CC} - 0.8			V	I_{OH} = –7 mA	
		3.9V	V_{CC} - 0.8			V	I_{OH} = –7 mA	
V_{OL1}	Output Low Voltage	2.0V		0.4	0.1	V	I_{OL} = 1.0 mA	
		3.9V		0.4	0.2	V	I_{OL} = 4.0 mA	
V_{OL2*}	Output Low Voltage	2.0V		0.8	0.5	V	I_{OL} = 5.0 mA	
		3.9V		0.8	0.3	V	I_{OL} = 7.0 mA	
V_{OL2}	Output Low Voltage(P36, P37,P00,P01)	2.0V		0.8	0.3	V	I_{OL} = 10 mA	
		3.9V		0.8	0.2	V	I_{OL} = 10 mA	
V_{RH}	Reset Input High Voltage	2.0V	0.8 V_{CC}	V_{CC}	1.5	V		
		3.9V	0.8 V_{CC}	V_{CC}	2.0	V		
V_{RI}	Reset Input Low Voltage	2.0V	V_{SS} – 0.3	0.2 V_{CC}	0.5	V		
		3.9V	V_{SS} – 0.3	0.2 V_{CC}	0.9	V		
V_{OFFSET}	Comparator Input Offset Voltage	2.0V		25	10	mV		
		3.9V		25	10	mV		
I_{IL}	Input Leakage	2.0V	-1	1	< 1	µA	V_{IN} = O_V, V_{CC}	
		3.9V	-1	1	< 1	µA	V_{IN} = O_V, V_{CC}	
I_{OL}	Output Leakage	2.0V	–1	1	< 1	µA	V_{IN} = O_V, V_{CC}	
		3.9V	–1	1	< 1	µA	V_{IN} = O_V, V_{CC}	
I_{IR}	Reset Input Pull-Up Current	2.0V		–230	-50	µA	V_{IN} = O_V	
		3.9V		–400	–90	µA	V_{IN} = O_V	
I_{CC}	Supply Current	2.0V		10	4	mA	@ 8.0 MHz	1,2
		3.9V		15	10	mA	@ 8.0 MHz	1,2
		2.0V		250	100	µA	@ 32 kHz	1,2,8
		3.9V		850	500	µA	@ 32 kHz	

Sym	Parameter	V_{CC}	T_A = 0°C to +70°C Min	Max	Typ @ 25°C	Units	Conditions	Notes
I_{CC1}	Standby Current (WDT Off)	2.0V		3	1	mA	HALT Mode V_{IN} = O_V, V_{CC} @ 8.0 MHz	1,2
		3.9V		5	4	mA	HALT Mode V_{IN} = O_V, V_{CC} @ 8.0 MHz	1,2
		2.0V		2	0.8	mA	Clock Divide-by-16 @ 8.0 MHz	1,2
		3.9V		4	2.5	mA	Clock Divide-by-16 @ 8.0 MHz	1,2
I_{CC2}	Standby Current	2.0V		8	2	µA	STOP Mode V_{IN} = O_V, V_{CC} WDT is not Running	3,5
		3.9V		10	3	µA	STOP Mode V_{IN} = O_V, V_{CC} WDT is not Running	3,5 3,5
		2.0V		500	310	µA	STOP Mode V_{IN} = O_V, V_{CC} WDT is Running	
		3.9V		800	600	µA		
V_{ICR}	Input Common Mode Voltage Range	2.0V	0	V_{CC} - 1.0V		V		8
		3.9V	0	V_{CC} - 1.0V		V		
T_{POR}	Power-On Reset	2.0V	12	75	18	ms		
		3.9V	5	20	7	ms		
V_{RAM}	Static RAM Data Retention Voltage	Vram	0.8		0.5	V		6
V_{LV}	V_{CC} Low Voltage Protection			2.15	1.7	V	8 MHz max Ext. CLK Freq.	4

Notes:	I_{CC1}	Typ	Max	Unit	Frequency
	Crystal/Resonator	3.0 mA	5	mA	8.0 MHz
	External Clock Drive	0.3 mA	5	mA	8.0 MHz

1. All outputs unloaded, inputs at rail.
2. CL1 = CL2 = 100 pF
3. Same as note [4] except inputs at V_{CC}.
4. The V_{LV} increases as the temperature decreases.
5. Oscillator stopped
6. Oscillator stops when V_{CC} falls below V_{LV} limit.
7. 32 kHz clock driver input.
8. For analog comparator, inputs when analog comparators are enabled.

* All Outputs excluding P00, P01, P36, and P37.

DC CHARACTERISTICS (Z86C71 SPECIFICATIONS)

Preliminary

Sym	Parameter	V_{CC}	T_A = 0°C to +70°C Min	Max	Typ @ 25°C	Units	Conditions	Notes
	Max Input Voltage	4.5V 5.5V		7 7		V V	I_{IN} 250 µA I_{IN} 250 µA	
V_{CH}	Clock Input High Voltage	4.5V 5.5V	0.9 V_{CC} 0.9 V_{CC}	V_{CC} + 0.3 V_{CC} + 0.3		V	Driven by External Clock Generator	
V_{CL}	Clock Input Low Voltage	4.5V 5.5V	V_{SS} – 0.3 V_{SS} –0.3	0.2 V_{CC} 0.2 V_{CC}		V	Driven by External Clock Generator	
V_{IH}	Input High Voltage	4.5V 5.5V	0.7 V_{CC} 0.7 V_{CC}	V_{CC} + 0.3 V_{CC} + 0.3	0.5V_{CC} 0.5V_{CC}	V	Driven by External Clock Generator	
V_{IL}	Input Low Voltage	4.5V 5.5V	V_{SS} – 0.3 V_{SS} – 0.3		0.5V_{CC} 0.5V_{CC}	V		
V_{OH1}	Output High Voltage	4.5V 5.5V	V_{CC} – 0.4 V_{CC} – 0.4		4.4 5.4	V	I_{OH} = –0.5 mA I_{OH} = –0.5 mA	
V_{OH2}	Output High Voltage (P36, P37)	4.5V 5.5V	V_{CC} – 0.8 V_{CC} – 0.8			V V	I_{OH} = –7 mA I_{OH} = –7 mA	
V_{OL1}	Output Low Voltage	4.5V 5.5V		0.4 0.4	0.1 0.2	V V	I_{OL} = 1.0 mA I_{OL} = 4.0 mA	
V_{OL2*}	Output Low Voltage	4.5V 3.9 V		0.8 0.8	0.3 0.4	V V	I_{OL} = 5.0 mA I_{OL} = 7.0 mA	
V_{OL2}	Output Low Voltage (P00, P01, P36,P37)	4.5V 5.5V		0.8 0.8	0.3 0.2	V	I_{OL} = 10 mA	
V_{RH}	Reset Input High Voltage	4.5V 5.5V	0.8 V_{CC} 0.8 V_{CC}	V_{CC} V_{CC}	2.5 3.0	V V		
V_{Rl}	Reset Input Low Voltage	4.5V 5.5V	V_{SS} – 0.3 V_{SS} – 0.3	0.2 V_{CC} 0.2 V_{CC}	0.5 0.9			
V_{OFFSET}	Comparator Input Offset Voltage	4.5V 5.5V		25 25	10 10	mV mV		
I_{IL}	Input Leakage	4.5V 5.5V	-1 -1	1 1	<1 <1	µA µA	V_{IN} = O_V, V_{CC} V_{IN} = O_V, V_{CC}	
I_{OL}	Output Leakage	4.5V 5.5V	-1 -1	1 1	<1 <1	µA µA	V_{IN} = O_V, V_{CC} V_{IN} = O_V, V_{CC}	
I_{IR}	Reset Input Current	4.5V 5.5V		-500 -800		µA µA		
I_{CC}	Supply Current	4.5V 5.5V		20 30		mA mA	@8.0 MHz @8.0 MHz	1,2 1.2
	WDT Off	4.5V 5.5V		1000 1250	10 10	µA µA	@ 32 kHz @ 32 kHz	1,2,8 1,2,8

Sym	Parameter	V_{CC}	T_A = 0°C to +70°C Min	Max	Typ @ 25°C	Units	Conditions	Notes
I_{CC1}	Standby Current (WDT Off)	4.5V		6	2	mA	HALT Mode $V_{IN} = O_V$, V_{CC} @ 8.0 MHz	1,2
		5.5V		8	5	mA	HALT Mode $V_{IN} = O_V$, V_{CC} @ 8.0 MHz	1,2
		4.5V		5	1.0	mA	Clock Divide-by-16 @ 8.0 MHz	1,2
		5.5V		7	3.0	mA	Clock Divide-by-16 @ 8.0 MHz	1,2
I_{CC2}	Standby Current	4.5V		8	2	µA	STOP Mode $V_{IN} = O_V$, V_{CC} WDT is not Running	3,5
		5.5V		10	3	µA	STOP Mode $V_{IN} = O_V$, V_{CC} WDT is not Running	3,5
		4.5V		500	310	µA	STOP Mode	3,5
		5.5V		800	600	µA	$V_{IN} = O_V$, V_{CC} WDT is Running	
V_{ICR}	Input Common Mode Voltage Range	2.0V	0	V_{CC} - 1.0V		V		8
		3.9V	0	V_{CC} - 1.0V		V		
T_{POR}	Power-On Reset	4.5V	5.0	75	8.0	ms		
		5.5V	4.0	20	6.0	ms		
V_{RAM}	Static RAM Data Retention Voltage	V_{RAM}	0.8		0.5	V		6
V_{LV}	V_{CC} Low Voltage Protection			2.15	1.7	V	8 MHz max Ext. CLK Freq.	4

Notes:	I_{CC1}	Typ	Max	Unit	Frequency
	Crystal/Resonator	3.5 mA	5	mA	8.0 MHz
	External Clock Drive	0.8 mA	5	mA	8.0 MHz

1. All outputs unloaded, inputs at rail.
2. CL1 = CL2 = 100 pF
3. Same as note [4] except inputs at V_{CC}.
4. The V_{LV} increases as the temperature decreases.
5. Oscillator stopped
6. Oscillator stops when V_{CC} falls below V_{LV} limit.
7. 32 kHz clock driver input
8. For analog comparator, inputs when analog comparators are enabled.

* All Outputs excluding P00, P01, P36, and P37.

AC CHARACTERISTICS

External I/O or Memory Read and Write Timing Diagram

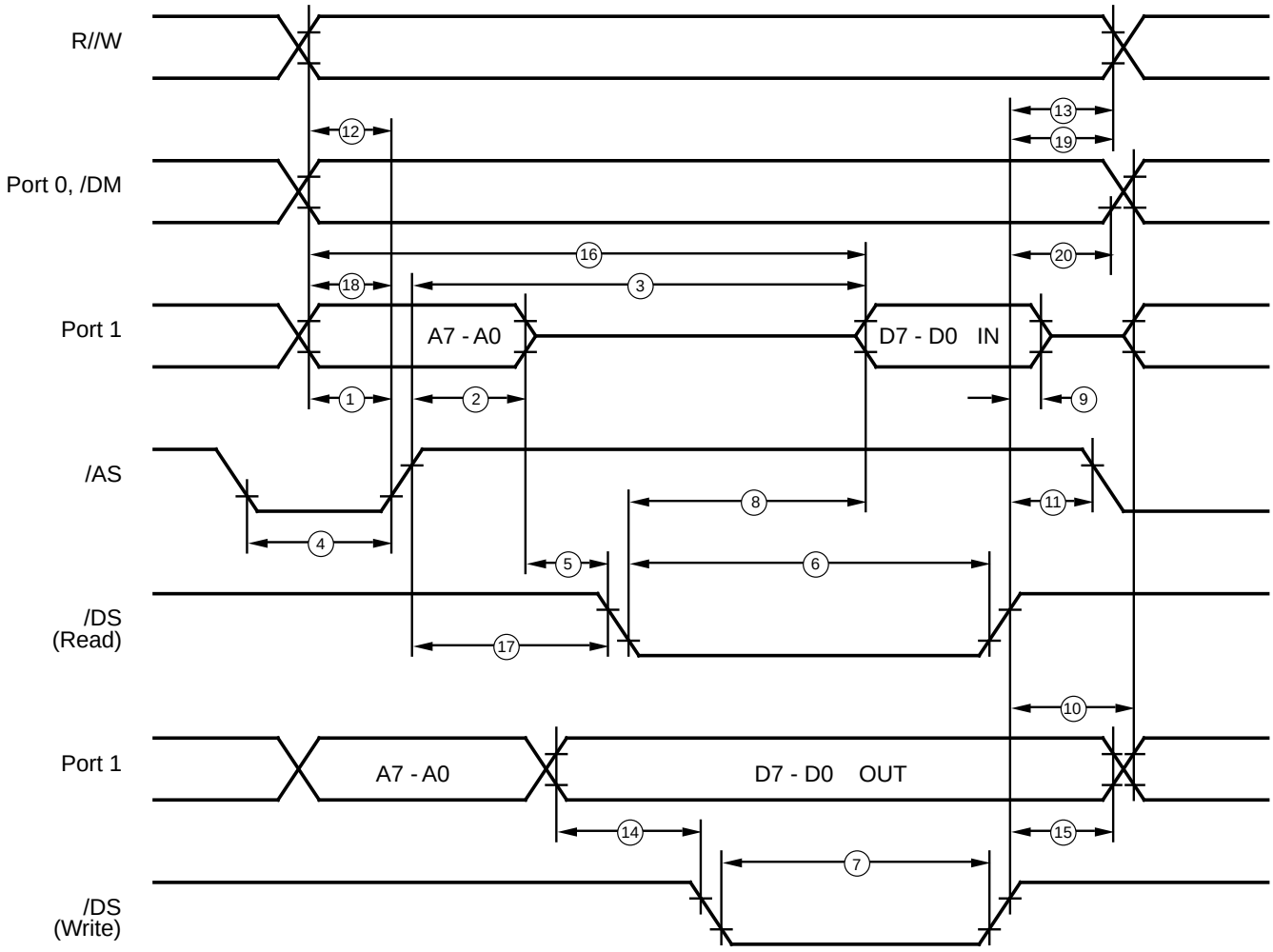

Figure 6. External I/O or Memory Read/Write Timing

AC CHARACTERISTICS

External I/O or Memory Read and Write Timing Table

				T_A = 0°C to +70°C 8.0 MHz			
No	**Symbol**	**Parameter**	**V_{CC}**	**Min**	**Max**	**Units**	**Notes**
1	TdA(AS)	Address Valid to /AS Rising Delay	2.0V 3.9V	55 55		ns ns	2
2	TdAS(A)	/AS Rising to Address Float Delay	2.0V 3.9V	70 70		ns ns	2
3	TdAS(DR)	/AS Rising to Read Data Required Valid	2.0V 3.9V		400 400	ns ns	1,2
4	TwAS	/AS Low Width	2.0V 3.9V	80 80		ns ns	2
5	Td	Address Float to /DS Falling	2.0V 3.9V	0 0		ns ns	
6	TwDSR	/DS (Read) Low Width	2.0V 3.9V	300 300		ns ns	1,2
7	TwDSW	/DS (Write) Low Width	2.0V 3.9V	165 165		ns ns	1,2
8	TdDSR(DR)	/DS Falling to Read Data Required Valid	2.0V 3.9V		260 260	ns ns	1,2
9	ThDR(DS)	Read Data to /DS Rising Hold Time	2.0V 3.9V	0 0		ns ns	2
10	TdDS(A)	/DS Rising to Address Active Delay	2.0V 3.9V	85 85		ns ns	2
11	TdDS(AS)	/DS Rising to /AS	2.0V 3.9V	60 70		ns ns	2
12	TdR/W(AS)	R//W Valid to /AS Rising Delay	2.0V 3.9V	70 70		ns ns	2
13	TdDS(R/W)	/DS Rising to R//W Not Valid	2.0V 3.9V	70 70		ns ns	2
14	TdDW(DSW)	Write Data Valid to /DS Falling (Write) Delay	2.0V 3.9V	80 80		ns ns	2
15	TdDS(DW)	/DS Rising to Write Data Not Valid Delay	2.0V 3.9V	70 80		ns ns	2
16	TdA(DR)	Address Valid to Read Data Required Valid	2.0V 3.9V		475 475	ns ns	1,2
17	TdAS(DS)	/AS Rising to /DS Falling Delay	2.0V 3.9V	100 100		ns ns	2
18	TdM(AS)	/DM Valid to /AS Falling Delay	2.0V 3.9V	55 55		ns ns	2
19	TdDS(DM)	/DS Rise to /DM Valid Delay	2.0V 3.9V	70 70		ns ns	
20	ThDS(A)	/DS Rise to Address Valid Hold Time	2.0V 3.9V	70 70		ns ns	

Notes:

1. When using extended memory timing add 2 TpC.
2. Timing numbers given are for minimum TpC.

Standard Test Load

All timing references use 0.9 V_{CC} for a logic 1 and 0.1 V_{CC} for a logic 0.

AC CHARACTERISTICS

Additional Timing Diagram

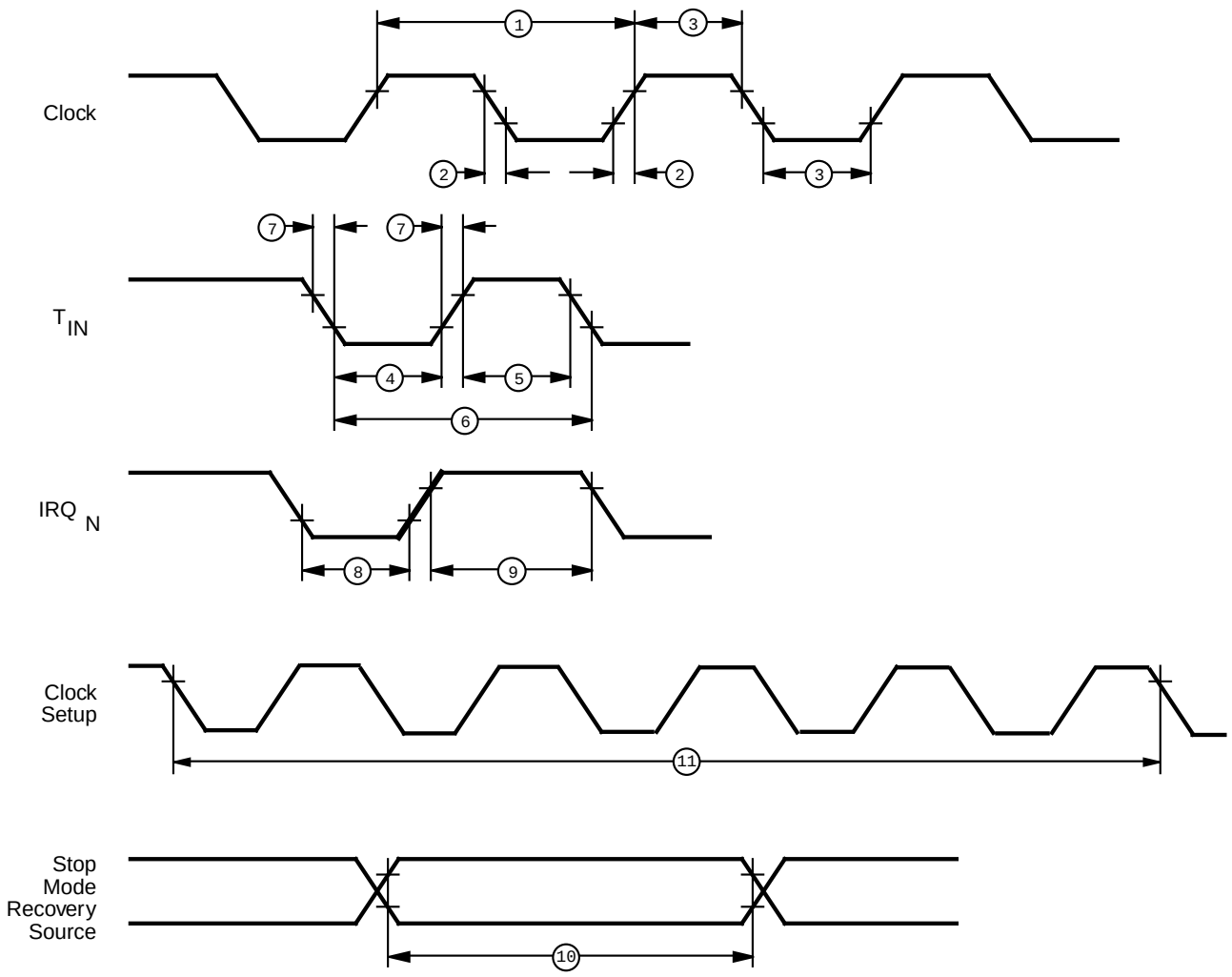

Figure 7. Additional Timing

AC CHARACTERISTICS

Additional Timing Table

				T_A = 0°C to +70°C 8.0 MHz			
No	**Symbol**	**Parameter**	**V_{CC}**	**Min**	**Max**	**Units**	**Notes**
1	TpC	Input Clock Period	2.0V	121	DC	ns	1
			3.9V	121	DC	ns	1
2	TrC, TfC	Clock Input Rise and Fall Times	2.0V		25	ns	1
			3.9V		25	ns	1
3	TwC	Input Clock Width	2.0V	37		ns	1
			3.9V	37		ns	1
4	TwTinL	Timer Input Low Width	2.0V	100		ns	1
			3.9V	70		ns	1
5	TwTinH	Timer Input High Width	2.0V	3TpC			1
			3.9V	3TpC			1
6	TpTin	Timer Input Period	2.0V	8TpC			1
			3.9V	8TpC			1
7	TrTin, TfTin	Timer Input Rise	2.0V		100	ns	1
			3.9V		100	ns	1
8A	TwIL	Interrupt Request Low Time	2.0V	100		ns	1,2
			3.9V	70		ns	1,2
8B	TwIL	Int. Request Low Time	4.5V	5TpC			1,3
			5.5V	5TpC			1,3
9	TwIH	Interrupt Request Input High Time	4.5V	5TpC			1,2
			5.5V	5TpC			1,2
10	Twsm	Stop-Mode Recovery Width Spec	2.0V	12		ns	8
			3.9V	12		ns	8
			2.0V	5TpC			7
				5TpC			7
11	Tost	Oscillator Start-up Time	2.0V		5TpC		4
			3.9V		5TpC		4
12	Twdt	Watch-Dog Timer Delay Time (5 ms)	2.0V	12	75	ms	D0=0, 5
			3.9V	5	20	ms	D1=0, 5
		10 ms	2.0V	20	150	ms	D0=1, 5
			3.9V	10	40	ms	D1=0, 5
		20 ms	2.0V	50	300	ms	D0=1, 5
			3.9V	20	80	ms	D1=0, 5
		80 ms	2.0V	225	1200	ms	D0=1, 5
			3.9V	80	320	ms	D1=0, 5

Notes:

1. Timing Reference uses 0.9 V_{CC} for a logic 1 and 0.1 V_{CC} for a logic 0.
2. Interrupt request through Port 3 (P33-P31).
3. Interrupt request through Port 3 (P30).
4. SMR - D5 = 0
5. Reg. WDTMR
6. Reg. SMR - D5 = 0
7. Reg. SMR - D5 = 1

PIN FUNCTIONS

XTAL1 Crystal 1 (time-based input). This pin connects a parallel-resonant crystal, ceramic resonator, LC, or RC network or an external single-phase clock to the on-chip oscillator input.

XTAL2 Crystal 2 (time-based output). This pin connects a parallel-resonant, crystal, ceramic resonant, LC, or RC network to the on-chip oscillator output.

Port 0 (P07-P00). Port 0 is an two-bit, bidirectional, CMOS-compatible port. These I/O lines are configured under software control as an I/O port. The output drivers are push-pull.

An optional 200 KOhm pull-up is available as a mask option on both Port 0 bits.

These pull-ups are disabled when configured (bit by bit) as an output.

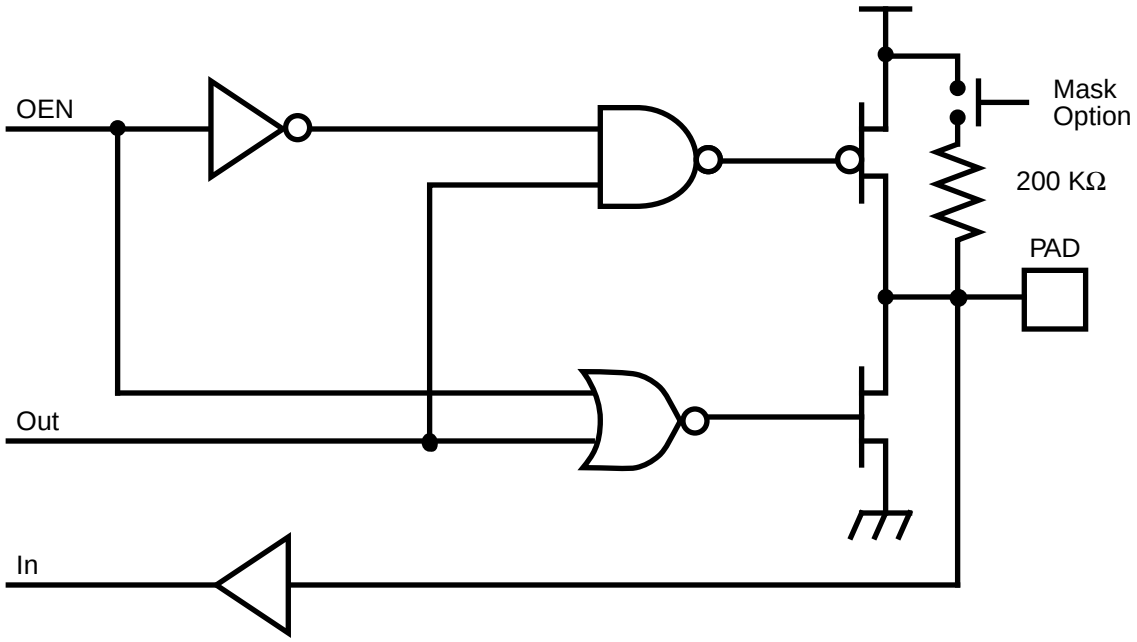

Figure 8. Port 0 Configuration

Port 2 (P27-P20). Port 2 is an 8-bit, bidirectional, CMOS-compatible I/O port. These eight I/O lines can be independently configured under software control as inputs or outputs. Port 2 is always available for I/O operation. A mask option is available to connect eight 200 KOhms (±50%) pull-up resistors on this port. Bits programmed as outputs are globally programmed as either push-pull or open-drain. The Z8 wakes up with the eight bits of Port 2 configured as inputs with open-drain outputs.

Port 2 also has an 8-bit input OR and an AND gate which can be used to wake up the part from STOP Mode (Figure 33). P20 can be programmed to access the edge selection circuitry (Figure 9).

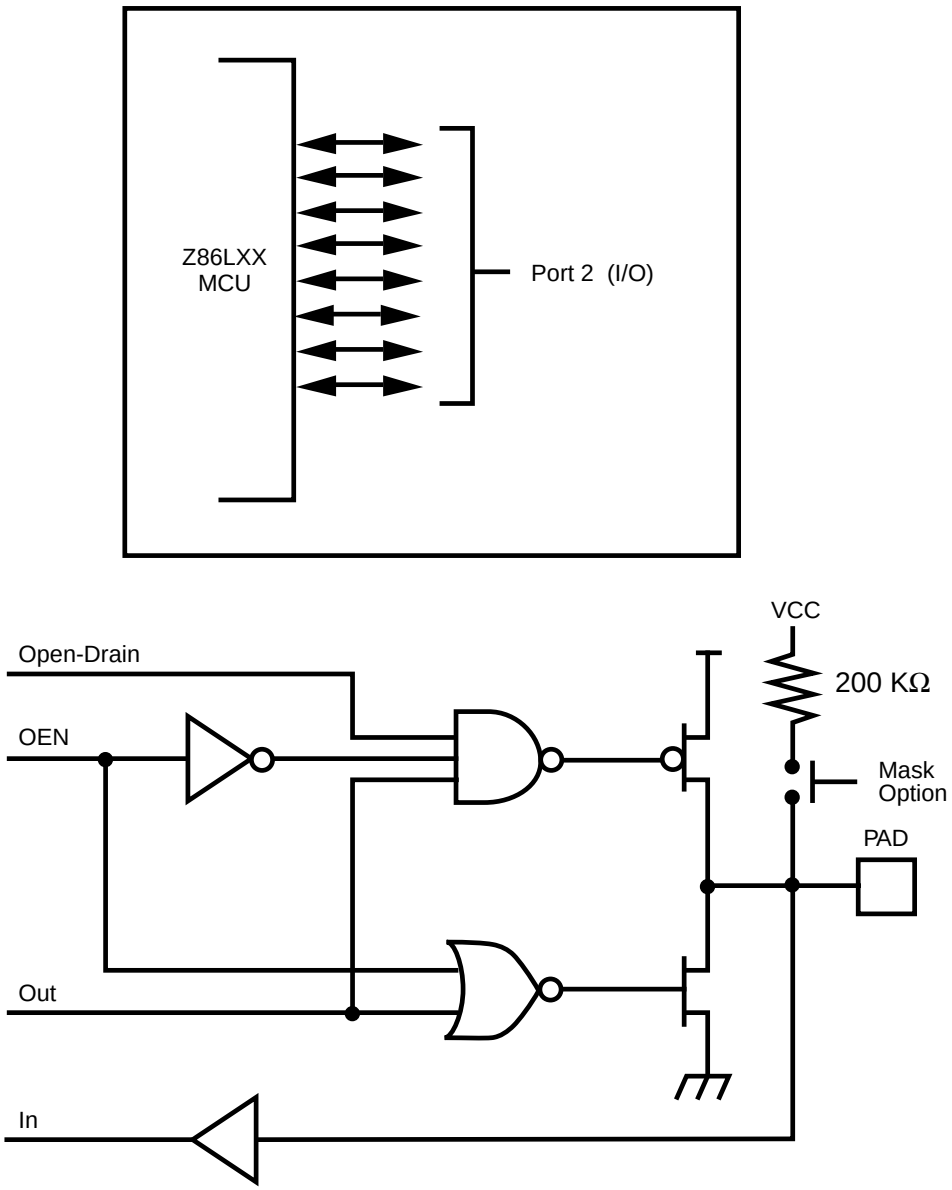

Figure 9. Port 2 Configuration

PIN FUNCTIONS (Continued)

Port 3 (P36-P31). Port 3 is a 6-bit, CMOS-compatible three fixed input and three fixed output port. Port 3 consists of three fixed input (P33-P31) and three fixed output (P36-P34), and can be configured under software control for Input/Output, Interrupt, and output from the counter/timers. P31, P32, and P33 are standard CMOS inputs; outputs are push-pull, except for P34, P35 which have floating drain capability (controlled by P3M, D0).

Two on-board comparators process analog signals on P31 and P32 with reference to the voltage on P33. The analog function is enabled by programming the Port 3 Mode Register (bit 1). P31 and P32 are programmable as rising, falling, or both edge triggered interrupts (IRQ register bits 6 and 7). Pref1 and P33 are the comparator reference voltage inputs. Access to the Counter Timer edge detection circuit is through P31 or P20 (see CTR1 description).

Port 3 provides the following control functions: three external interrupt request signals (IRQ2-IRQ0).

Port 3 also provides output for each of the counter/timers and the AND/OR Logic. Control is performed by programming bits D5-D4 of CTRI, bit 0 of CTR0 and bit 0 of CTR2.

Table 2. Pin Assignments

Pin	I/O	C/T	Comp.	Int.	Ext
P31	IN	IN	AN1	IRQ2	
P32	IN		AN2	IRQ0	
P33	IN		V_{REF}	IRQ1	
P34	OUT	T8	A01		DM
P35	OUT	T16			
P36	OUT	T8/16			
P20	I/O	IN			

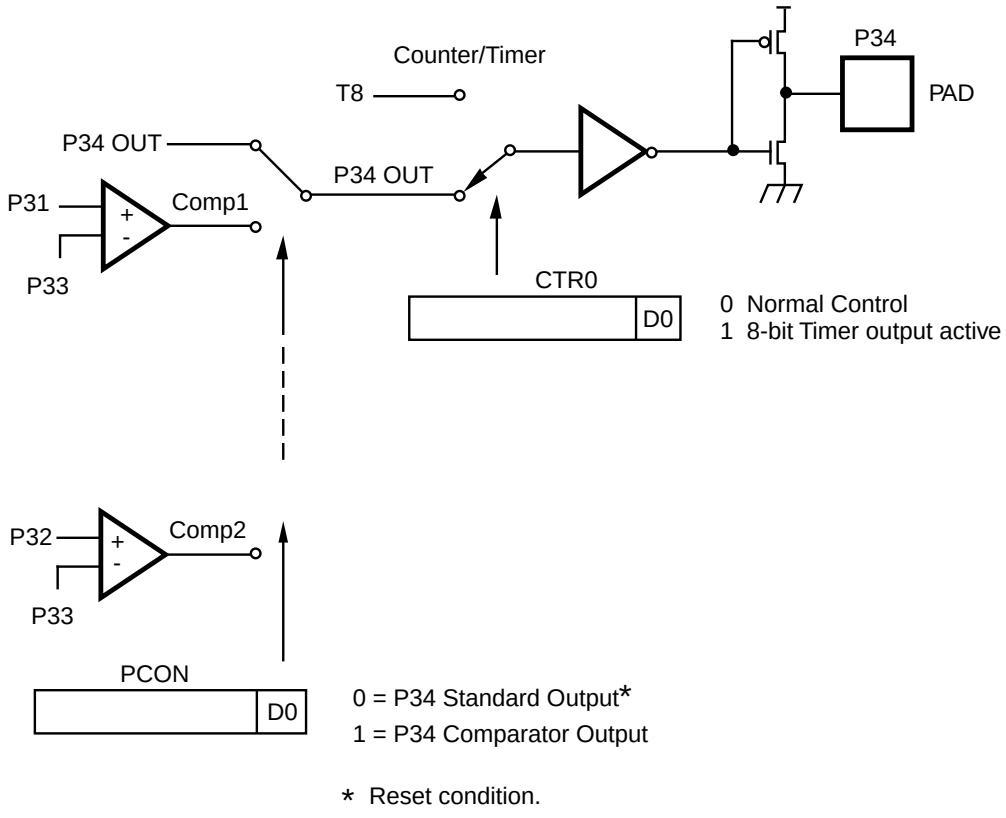

Figure 10. Port 3 Configuration

Comparator Inputs. In Analog Mode, Port 3 (P31 and P32) have a comparator front end. P33 serves as the reference for both comparators. In this mode, the P33 internal data latch and its corresponding IRQ1 is diverted to the SMR Sources (excluding P31, P32, and P33) as shown in Figure 38. In digital mode, P33 is used as D3 of the Port 3 input register which then generates IRQ1 as shown in Figure 16.

Notes: Comparators are powered down by entering STOP Mode. For P31-P33 to be used as a Stop-Mode Recovery source, these inputs must be placed into digital mode.

Comparator Outputs. COMP1 may be programmed to be outputted on P34 through the PCON register (Figure 15).

Power-On Reset. the typical reset output time is 5 ms. The Z86L7X does not reset WDTMR, SMR, P2M, or P3M registers on a Stop-Mode Recovery operation.

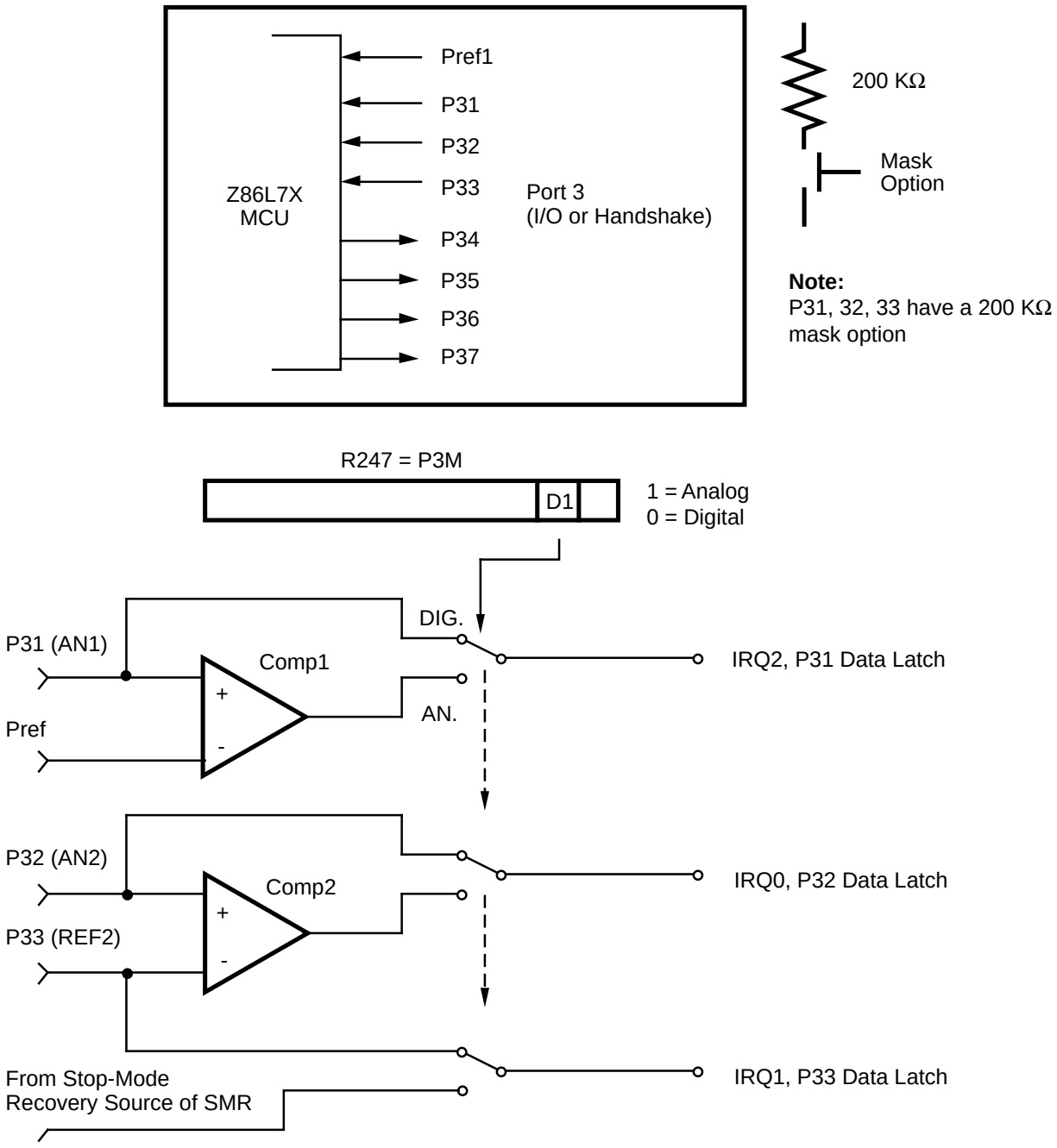

Figure 11. Port 3 Configuration

PIN FUNCTIONS (Continued)

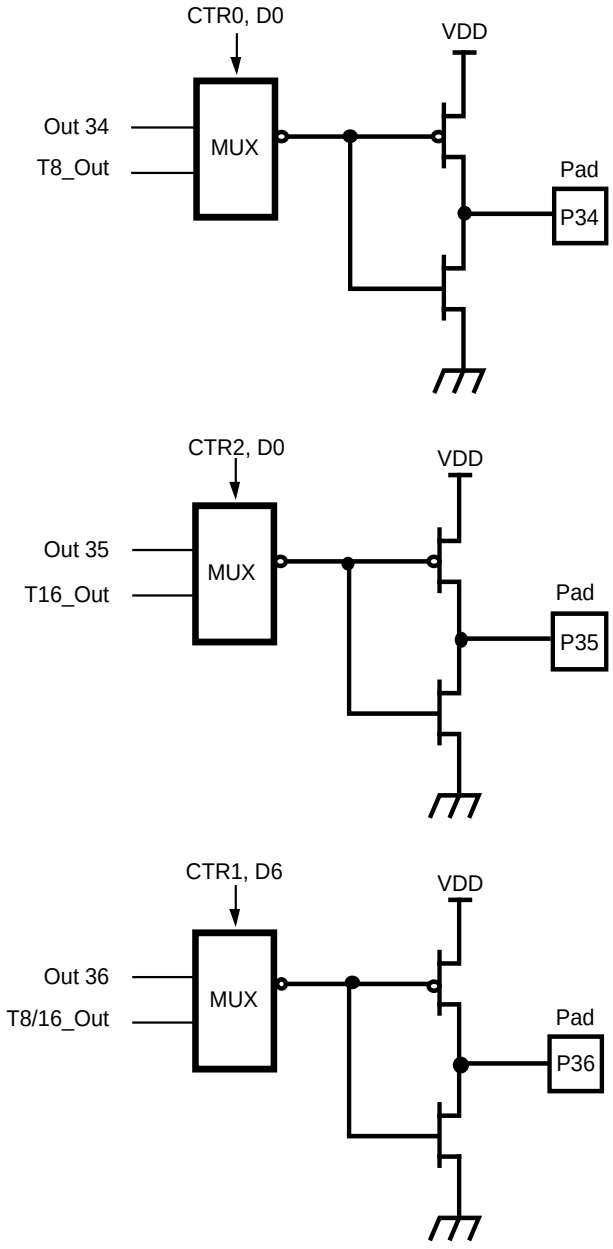

Figure 12. Port 3 Configuration

FUNCTIONAL DESCRIPTION

The Z8 incorporates special functions to enhance the Z8's functionality in consumer and battery operated applications.

Reset. The device is reset in one of the following conditions:

1. Power-On Reset
2. Watch-Dog Timer
3. Stop-Mode Recovery Source
4. Low Voltage Detection

Program Memory. The Z86L7X addresses up to 2K, 4K, 8 KB of internal program memory, with the remainder being external memory (Figure 13). The first 12 bytes of program memory are reserved for the interrupt vectors. These locations contain five 16-bit vectors that correspond to the five available interrupts. Addresses 12 to 2K, 4K, 8K (dependent on version) consist of on-chip mask-programmed ROM.

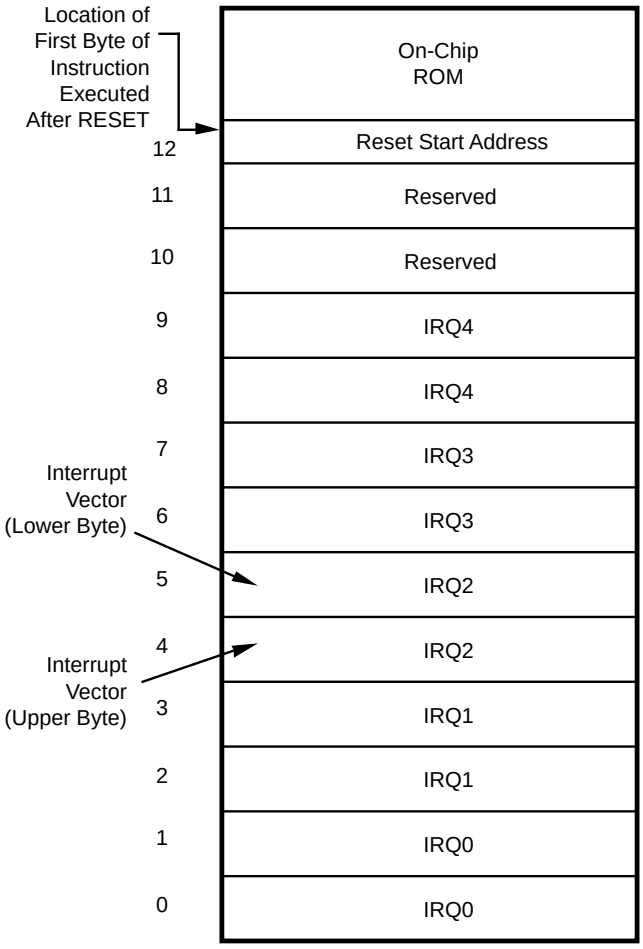

Figure 13. Program Memory Map

Expanded Register File. The register file has been expanded to allow for additional system control registers, and for mapping of additional peripheral devices into the register address area. The Z8 register address space R0 through R15 has been implemented as 16 banks of 16 registers per bank. These register groups are known as the ERF (Expanded Register File). Bits 7-4 of register RP select the working register group. Bits 3-0 of register RP select the expanded register file bank. Note that expanded register bank is also referred to as expanded register group (Figure14).

The upper nibble of the register pointer (Figure 23) selects which working register group of 16 bytes in the register file, out of the possible 256, will be accessed. The lower nibble selects the expanded register file bank and, in the case of the Z86LXX family, banks 0, F, and D are implemented. A 0h in the lower nibble will allow the normal register file (bank 0) to be addressed, but any other value from 1H to FH will exchange the lower 16 registers to an expanded register bank.

For example:

Z86L70: (See Figure 16)

R253 RP = 00H
R0 = Port 0
R1 = Port 1
R2 = Port 2
R3 = Port 3

But if:

R253 RP = 0DH
R0 = CTRL0
R1 = CTRL1
R2 = CTRL2
R3 = Reserved

The counter/timers are mapped into ERF group D. Access is easily done using the following example:

LD RP, #0DH Select ERF D for access to bank D (working register group 0)

LD R0,#xx load CTRL0

LD 1, #xx load CTRL1

LD R1, 2 CTRL2 $\rightarrow$ CTRL1

LD RP, #7DH Select expanded register bank D and working register group 7 of bank 0 for access .

LD 71H, 2 CTRL2 $\rightarrow$ register 71H

LD R1, 2 CTRL2 $\rightarrow$ register 71H

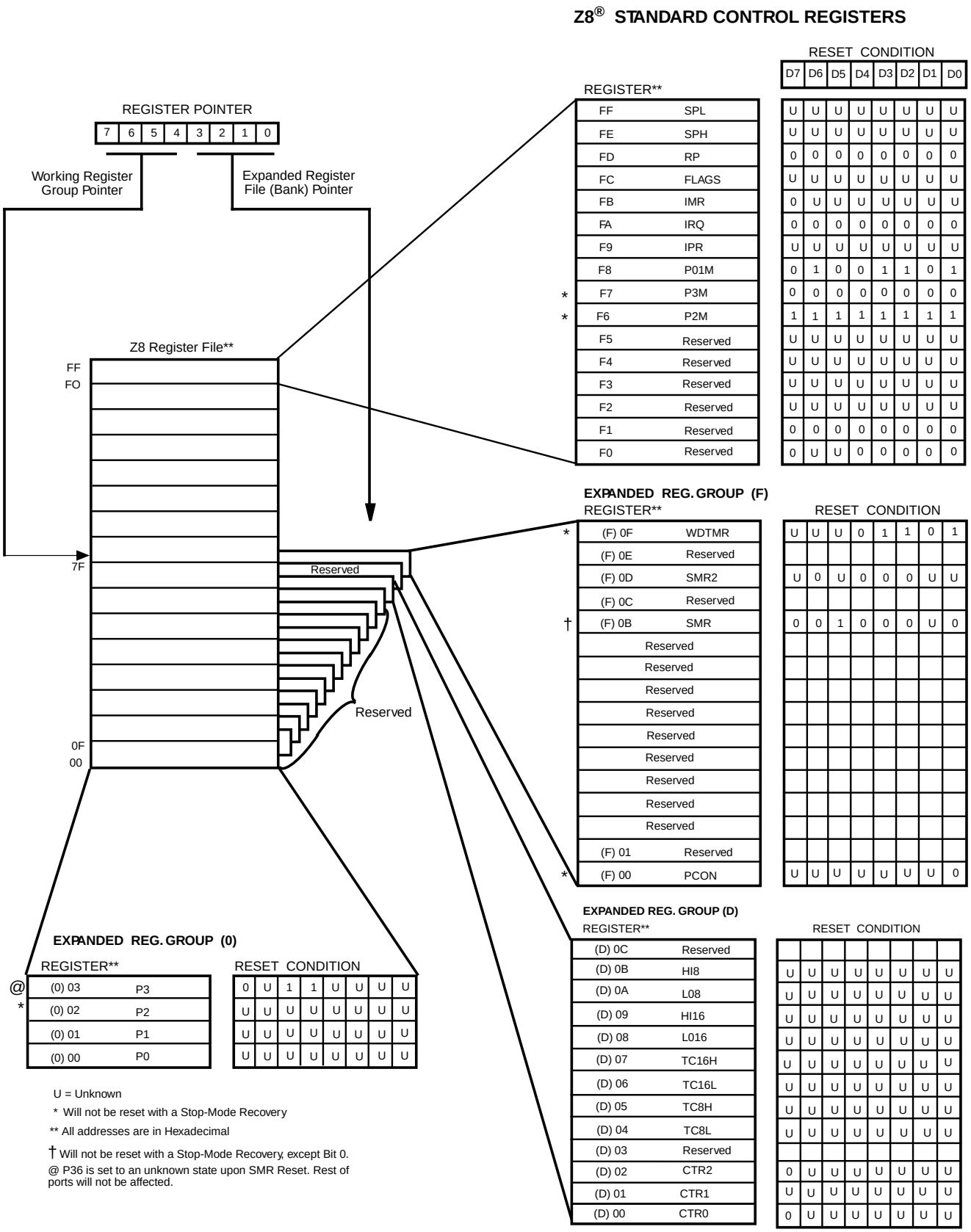

Figure 14. Expanded Register File Architecture

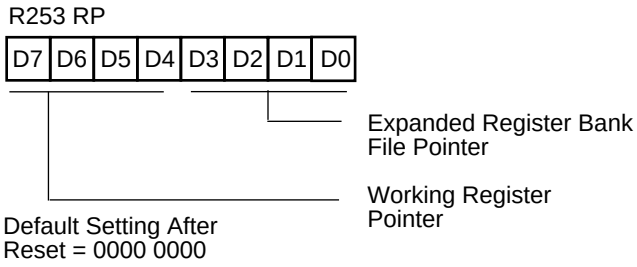

Figure 15. Register Pointer

RAM/Register File. The register file (group 0) consists of four I/O port registers, 236 general purpose registers, and 16 control and status registers (R0-R3, R4-R239, and R240-R255, respectively), plus two expanded registers group (Banks D and F). In the 4-bit mode, the register file is divided into 16 working register groups, each occupying 16 continuous locations. The Register Pointer addresses the starting location of the active working register group.

Note: Registers E0-EF of Bank 0 are only accessed through working registers and indirect addressing modes.

Stack. The Z86L7X internal register file is used for the stack. An 8-bit Stack Pointer (R255) is used for the internal stack that resides in the general-purpose registers (R4-R239).

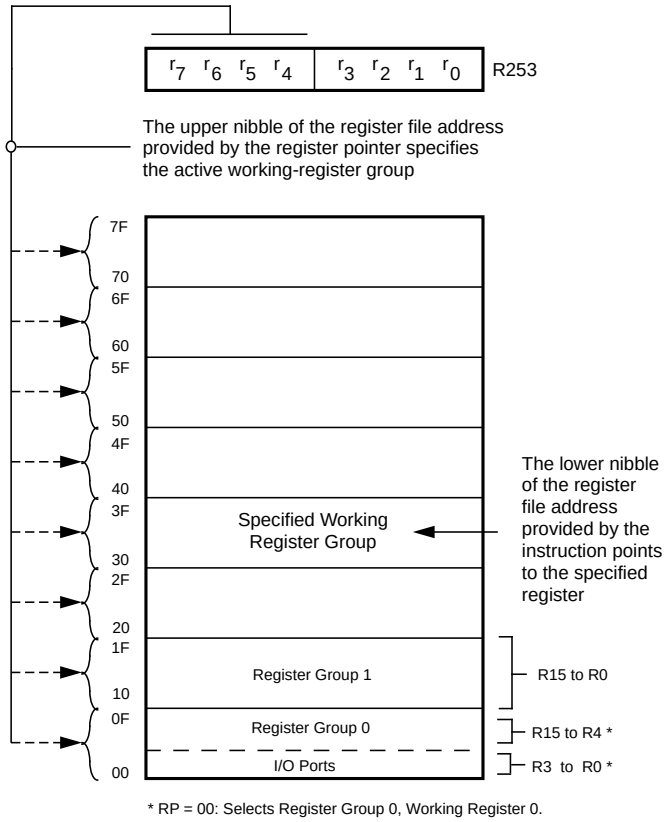

Figure 16. Register Pointer

Counter/Timer Register Description

Expanded Register Group D	
(D)%0C	Reserved
(D)%0B	HI8
(D)%0A	LO8
(D)%09	HI16
(D)%08	LO16
(D)%07	TC16H
(D)%06	TC16L
(D)%05	TC8H
(D)%04	TC8L
(D)%03	Reserved
(D)%02	CTR2
(D)%01	CTR1
(D)%00	CTR0

HI8(D)%0B: Holds the captured data from the output of the 8-bit Counter/Timer0. This register is typically used to hold the number of counts when the input signal is 1.

Field	Bit Position		Description
T8_Capture_HI	76543210	R	Captured Data
		W	No Effect

L08(D)%0A: Holds the captured data from the output of the 8-bit Counter/Timer0. This register is typically used to hold the number of counts when the input signal is 0.

Field	Bit Position		Description
T16_Capture_LO	76543210	R	Captured Data
		W	No Effect

HI16(D)%09: Holds the captured data from the output of the 16-bit Counter/Timer16. This register holds the MS-Byte of the data.

Field	Bit Position		Description
T16_Capture_HI	76543210	R	Captured Data
		W	No Effect

L016(D)%08: Holds the captured data from the output of the 16-bit Counter/Timer16. This register holds the LS-Byte of the data.

Field	Bit Position		Description
T16_Capture_LO	76543210	R	Captured Data
		W	No Effect

TC16H(D)%07: Counter/Timer2 MS-Byte Hold Register.

Field	Bit Position		Description
T16_Data_HI	76543210	R	Data
		W	

TC16L(D)%06: Counter/Timer2 LS-Byte Hold Register.

Field	Bit Position		Description
T16_Data_LO	76543210	R/W	Data

TC8H(D)%05: Counter/Timer8 High Hold Register.

Field	Bit Position		Description
T8_Level_HI	76543210	R/W	Data

TC8L(D)%04: Counter/Timer8 Low Hold Register.

Field	Bit Position		Description
T8_Level_LO	76543210	R/W	Data

CTR0 (D)00: Counter/Timer8 Control Register.

Field	Bit Position		Value	Description
T8_Enable	7-------	R	0*	Counter Disabled
			1	Counter Enabled
		W	0	Stop Counter
			1	Enable Counter
Single/Modulo-N	-6------	R/W	0	Modulo-N
			1	Single Pass
Time_Out	--5-----	R	0	No Counter Time-Out
				Counter Time-Out Occurred
				No Effect
				Reset Flag to 0
T8_Clock	---43---	R/W	0 0	SCLK
			0 1	SCLK/2
			1 0	SCLK/4
			1 1	SCLK/8
Capture_INT_Mask	-----2--	R/W	0	Disabled Data Capture Int.
			1	Enable Data Capture Int.
Counter_INT_Mask	------1-	R/W	0	Disable Data Capture Int.
			1	Enable Time-Out Int.
P34_Out	-------0	R/W	0	P34 as Port Output
			1	T8 Output on P34

CTR0: Counter/Timer8 Control Register Description

T8 Enable. This field enables T8 when set (written) to 1.

Single/Modulo-N. When set to 0 (modulo-n), the counter reloads the initial value when the terminal count is reached. When set to 1 (single pass), the counter stops when the terminal count is reached.

Time-Out. This bit is set when T8 times out (terminal count reached). To reset this bit, a 1 should be written to this location. This is the only way to reset this status condition, therefore, care should be taken to reset this bit prior to using/enabling the counter/timers.

Note: Care must be taken when utilizing the OR or AND commands to manipulate CTR0, bit 5 and CTR1, bits 0 and 1 (Demodulation Mode). These instructions use a Read-Modify-Write sequence in which the current status from the CTR0 and CTR1 registers will be ORed or ANDed with the designated value and then written back into the registers. Example: When the status of bit 5 is 1, a reset condition will occur.

T8 Clock. Defines the frequency of the input signal to T8.

Capture_INT_Mask. Set this bit to allow interrupt when data is captured into either LO8 or HI8 upon a positive or negative edge detection in demodulation mode.

Counter_INT_Mask. Set this bit to allow interrupt when T8 has a time out.

P34_Out. This bit defines whether P34 is used as a normal output pin or the T8 output.

CTR1 (D)01: Controls the functions in common with the T8 and T16

Field	Bit Position		Value	Description
Mode	7-------	R/W	0	Transmit Mode
			1	Demodulation Mode
P36_Out/	-6------	R/W		Transmit Mode
Demodulator_Input			0	Port Output
			1	T8/T16 Output
				Demodulation Mode
			0	P31
			1	P20
T8/T16_Logic/	--54----	R/W		Transmit Mode
Edge _Detect			00	AND
			01	OR
			10	NOR
			11	NAND
				Demodulation Mode
			00	Falling Edge
			01	Rising Edge
			10	Both Edges
			11	Reserved
Transmit_Submode/Glitch_	----32--	R/W		Transmit Mode
Filter			00	Normal Operation
			01	Ping-Pong Mode
			10	T16_Out=0
			11	T16_Out=1
				Demodulation Mode
			00	No Filter
			01	4 SCLK Cycle
			10	8 SCLK Cycle
			11	16 SCLK Cycle
Initial_T8_Out/	------1-			Transmit Mode
Rising_Edge		R/W	0	T8_OUT is 1 Initially
			1	T8_OUT is 1 Initially
				Demodulation Mode
		R	0	No Rising Edge
			1	Rising Edge Detected
		W	0	No Effect
			1	Reset Flag to 0
Initial_T16_Out/	-------0			Transmit Mode
Falling _Edge		R/W	0	T16_OUT is 0 Initially
			1	T16_OUT is 1 Initially
				Demodulation Mode
		R	0	No Falling Edge
			1	Falling Edge Detected
		W	0	No Effect
			1	Reset Flag to 0

CTR1 Register Description

Mode. If it is 0, the Counter/Timers are in the transmit mode, otherwise they are in the demodulation mode.

P36_Out/Demodulator_Input. In Transmit Mode, this bit defines whether P36 is used as a normal output pin or the combined output of T8 and T16.

In Demodulation Mode, this bit defines whether the input signal to the Counter/Timers is from P20 or P31.

T8/T16_Logic/Edge _Detect. In Transmit Mode, this field defines how the outputs of T8 and T16 are combined (AND, OR, NOR, NAND).

In Demodulation Mode, this field defines which edge should be detected by the edge detector.

Transmit_Submode/Glitch Filter. In Transmit Mode, this field defines whether T8 and T16 are in the "Ping-Pong" mode or in independent normal operation mode. Setting this field to "Normal Operation Mode" terminates the "Ping-Pong Mode" operation. When set to 10, T16 is immediately forced to a 0. When set to 11, T16 is immediately forced to a 1.

In Demodulation Mode, this field defines the width of the glitch that should be filtered out.

Initial_T8_Out/Rising_Edge. In Transmit Mode, if 0, the output of T8 is set to 0 when it starts to count. If 1, the output of T8 is set to 1 when it starts to count. When this bit is set to 1 or 0, T8_OUT will be set to the opposite state of this bit. This insures that when the clock is enabled a transition occurs to the initial state set by CTR1, D1.

In Demodulation Mode, this bit is set to 1 when a rising edge is detected in the input signal. In order to reset it, a 1 should be written to this location.

Initial_T16 Out/Falling _Edge. In Transmit Mode, if it is 0, the output of T16 is set to 0 when it starts to count. If it is 1, the output of T16 is set to 1 when it starts to count. This bit is effective only in Normal or Ping-Pong Mode (CTR1, D3, D2). When this bit is set, T16_OUT will be set to the opposite state of this bit. This insures that when the clock is enabled a transition occurs to the initial state set by CTR1, D0.

In Demodulation Mode, this bit is set to 1 when a falling edge is detected in the input signal. In order to reset it, a 1 should be written to this location.

Note: Modifying CTR1, (D1 or D0) while the counters are enabled will cause un-predictable output from T8/16_OUT.

CTR2 (D)%02: Counter/Timer16 Control Register.

Field	Bit Position		Value	Description
T16_Enable	7-------	R	0*	Counter Disabled
			1	Counter Enabled
		W	0	Stop Counter
			1	Enable Counter
Single/Modulo-N	-6------	R/W		Transmit Mode
			0	Modulo-N
			1	Single Pass
				Demodulation Mode
			0	T16 Recognizes Edge
			1	T16 Does Not Recognize Edge
Time_Out	--5-----	R	0	No Counter Time-Out
			1	Counter Time-Out Occurred
			0	No Effect
			1	Reset Flag to 0
T16 _Clock	---43---	R/W	00	SCLK
			01	SCLK/2
			10	SCLK/4
			11	SCLK/8
Capture_INT_Mask	-----2--	R/W	0	Disable Data Capture Int.
			1	Enable Data Capture Int.
Counter_INT_Mask	------1-	R/W	0	Disable Time-Out Int.
			1	Enable Time-Out Int.
P35_Out	-------0	R/W	0	P35 as Port Output
			1	T16 Output on P35

Note: * Indicates the value upon Power-On Reset

CTR2 Description

T16_Enable. This field enables T16 when set to 1.

Single/Modulo-N. In Transmit Mode, when set to 0, the counter reloads the initial value when terminal count is reached. When set to 1, the counter stops when the terminal count is reached.

In Demodulation Mode, when set to 0 , T16 captures and reloads on detection of all the edges; when set to 1, T16 captures and detects on the first edge, but ignores the subsequent edges. For details, see the description of T16 Demodulation Mode.

Time_Out. This bit is set when T16 times out (terminal count reached). In order to reset it, a 1 should be written to this location.

T16_Clock. Defines the frequency of the input signal to Counter/Timer16.

Capture_INT_Mask. Set this bit to allow interrupt when data is captured into LO16 and HI16.

Counter_INT_Mask. Set this bit to allow interrupt when T16 times out.

P35_Out. This bit defines whether P35 is used as a normal output pin or T16 output.

SMR2(F)%0D: Stop-Mode Recovery Register 2.

Field	Bit Position		Value	Description
Reserved	7-------		0	Reserved (Must be 0)
Recovery Level	-6------	W	0*	Low
			1	High
Reserved	--5-----		0	Reserved (Must be 0)
Source	---432--	W	000*	A. POR Only
			001	B. NAND of P23-P20
			010	C. NAND or P27-P20
			011	D. NOR of P33-P31
			100	E. NAND of P33-P31
			101	F. NOR of P33-P31, P00,P07
			110	G. NAND of P33-P31,P00,P07
			111	H. NAND of P33-P31,P22-P20
Reserved	------10		00	Reserved (Must be 0)

Note: * Indicates the value upon Power-On Reset.

Counter/Timer Functional Blocks

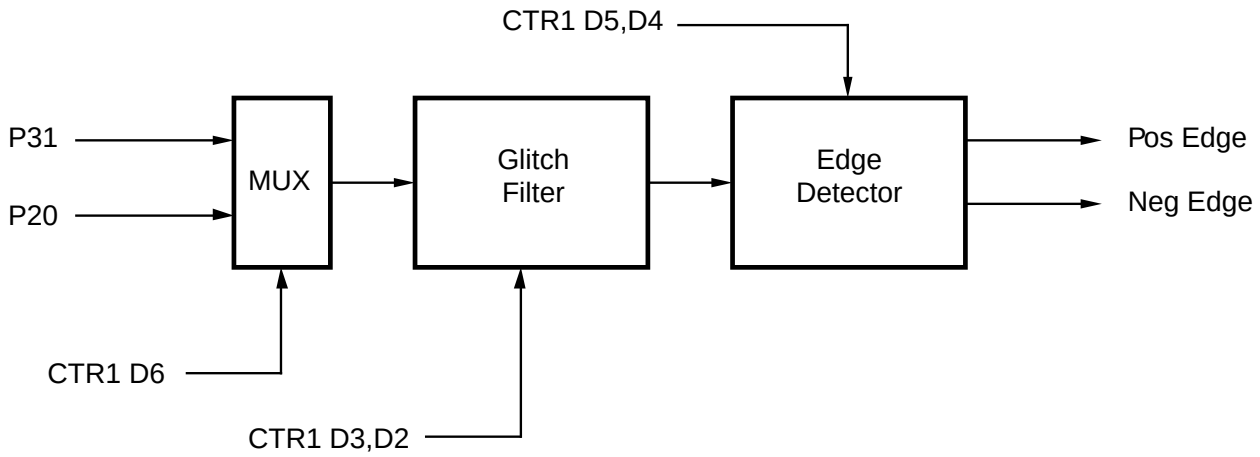

Figure 17. Glitch Filter Circuitry

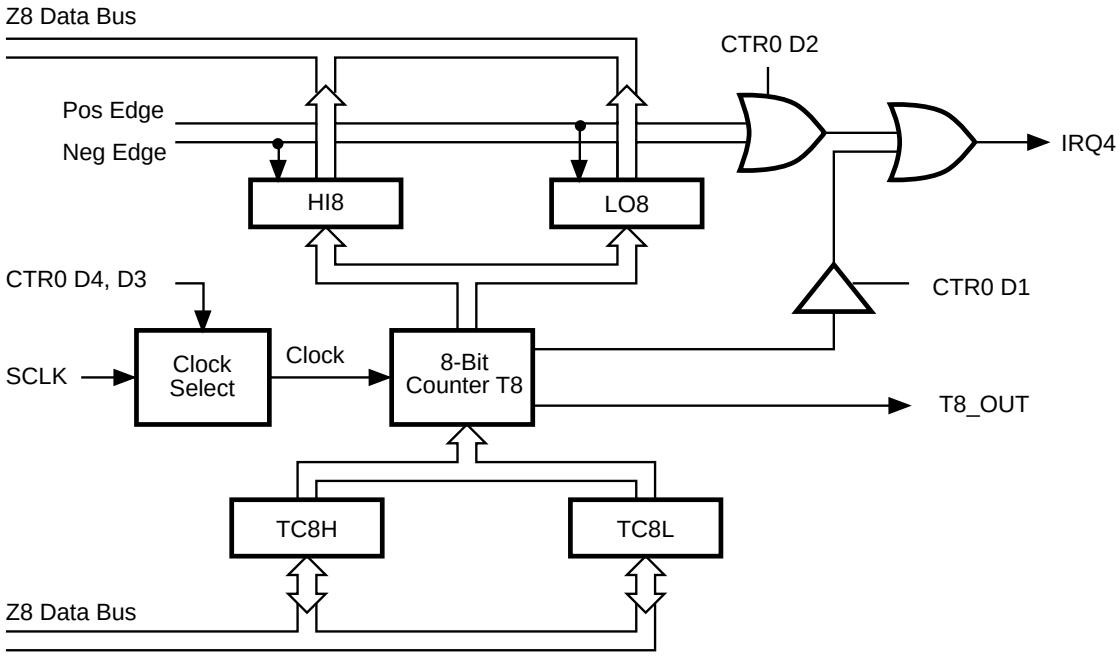

Figure 18. 8-Bit Counter/Timer Circuits

FUNCTIONAL DESCRIPTION (Continued)

Input Circuit
The edge detector monitors the input signal on P31 or P20. Based on CTR1 D5-D4, a pulse is generated at the Pos Edge or Neg Edge line when an edge is detected. Glitches in the input signal which have a width less than specified (CTR1 D3, D2) are filtered out.

T8 Transmit Mode
When T8 is enabled, the output of T8 depends on CTR1, D1. If it is 0, T8_OUT is 1. If it is 1, T8_OUT is 0.

When T8 is enabled, the output T8_OUT switches to the initial value (CTR1 D1). If the initial value (CTR1 D1) is 0, TC8L is loaded, otherwise TC8H is loaded into the counter. In Single-Pass Mode (CTR0 D6), T8 counts down to 0 and stops, T8_OUT toggles, the time-out status bit (CTR0 D5) is set, and a time-out interrupt can be generated if it is enabled (CTR0 D1) (Figure 22). In Modulo-N Mode, upon reaching terminal count, T8_OUT is toggled, but no interrupt is generated. Then T8 loads a new count (if the T8_OUT level now is 0), TC8L is loaded; if it is 1, TC8H is loaded. T8 counts down to 0, toggles T8_OUT, sets the time-out status bit (CTR0 D5) and generates an interrupt if enabled (CTR0 D1) (Figure 23). This completes one cycle. T8 then loads from TC8H or TC8L according to the T8_OUT level, and repeats the cycle.

The user can modify the values in TC8H or TC8L at any time. The new values take effect when they are loaded. Care must be taken not to write these registers at the time the values are to be loaded into the counter/timer, to ensure known operation. **An initial count of 1 is not allowed (a non-function will occur).** An initial count of 0 will cause TC8 to count from 0 to %FF to %FE (Note, % is used for hexadecimal values). Transition from 0 to %FF is not a time-out condition.

Note: Using the same instructions for stopping the counter/timers and setting the status bits is not recommended. Two successive commands, first stopping the counter/timers, then resetting the status bits is necessary. This is required because it takes one counter/timer clock interval for the initiated event to actually occur.

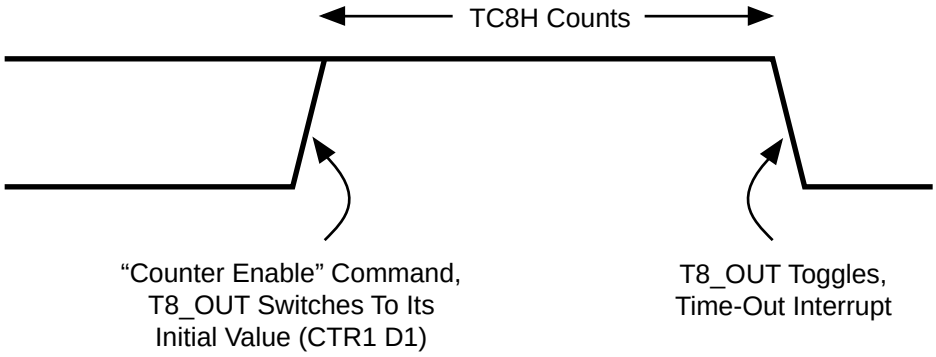

Figure 19. T8_OUT in Single-Pass Mode

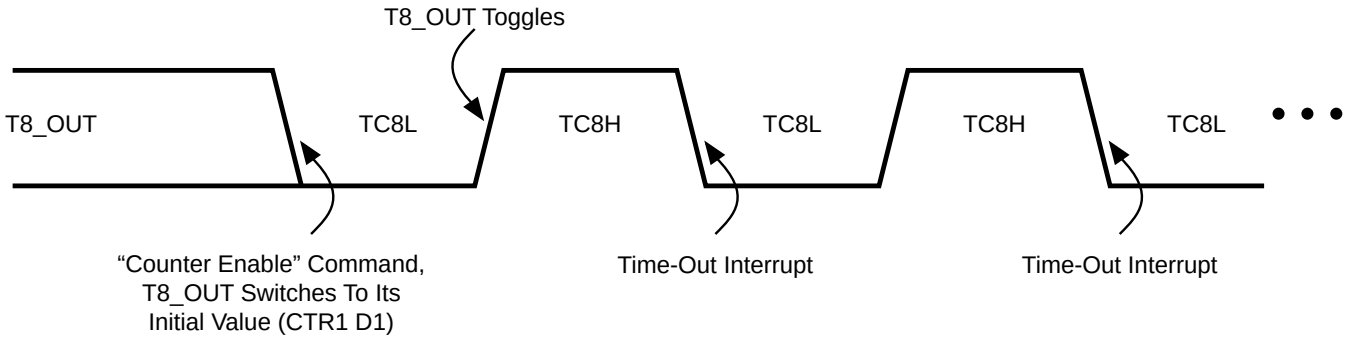

Figure 20. T8_OUT in Modulo-N Mode

T8 Demodulation Mode

The user should program TC8L and TC8H to %FF. After T8 is enabled, when the first edge (rising, falling, or both depending on CTR1 D5, D4) is detected, it starts to count down. When a subsequent edge (rising, falling, or both depending on CTR1 D5, D4) is detected during counting, the current value of T8 is one's complemented and put into one of the capture registers. If it is a positive edge, data is put into LO8, if negative edge, HI8. One of the edge detect status bits (CTR1 D1, D0) is set, and an interrupt can be generated if enabled (CTR0 D2). Meanwhile, T8 is loaded with %FF and starts counting again. Should T8 reach 0, the time-out status bit (CTR0 D5) is set, an interrupt can be generated if enabled (CTR0 D1), and T8 continues counting from %FF (Figure 21).

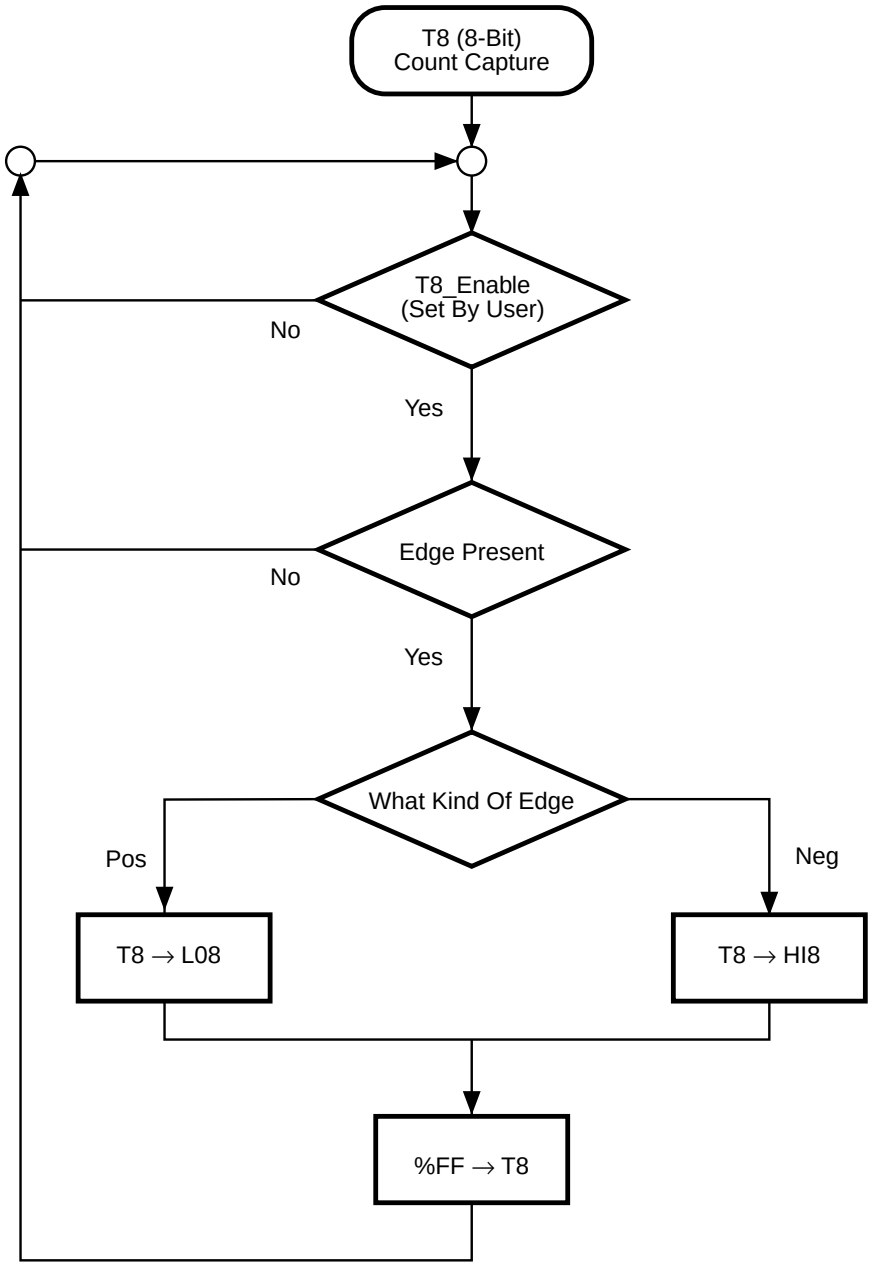

Figure 21. Demodulation Mode Count Capture Flowchart

FUNCTIONAL DESCRIPTION (Continued)

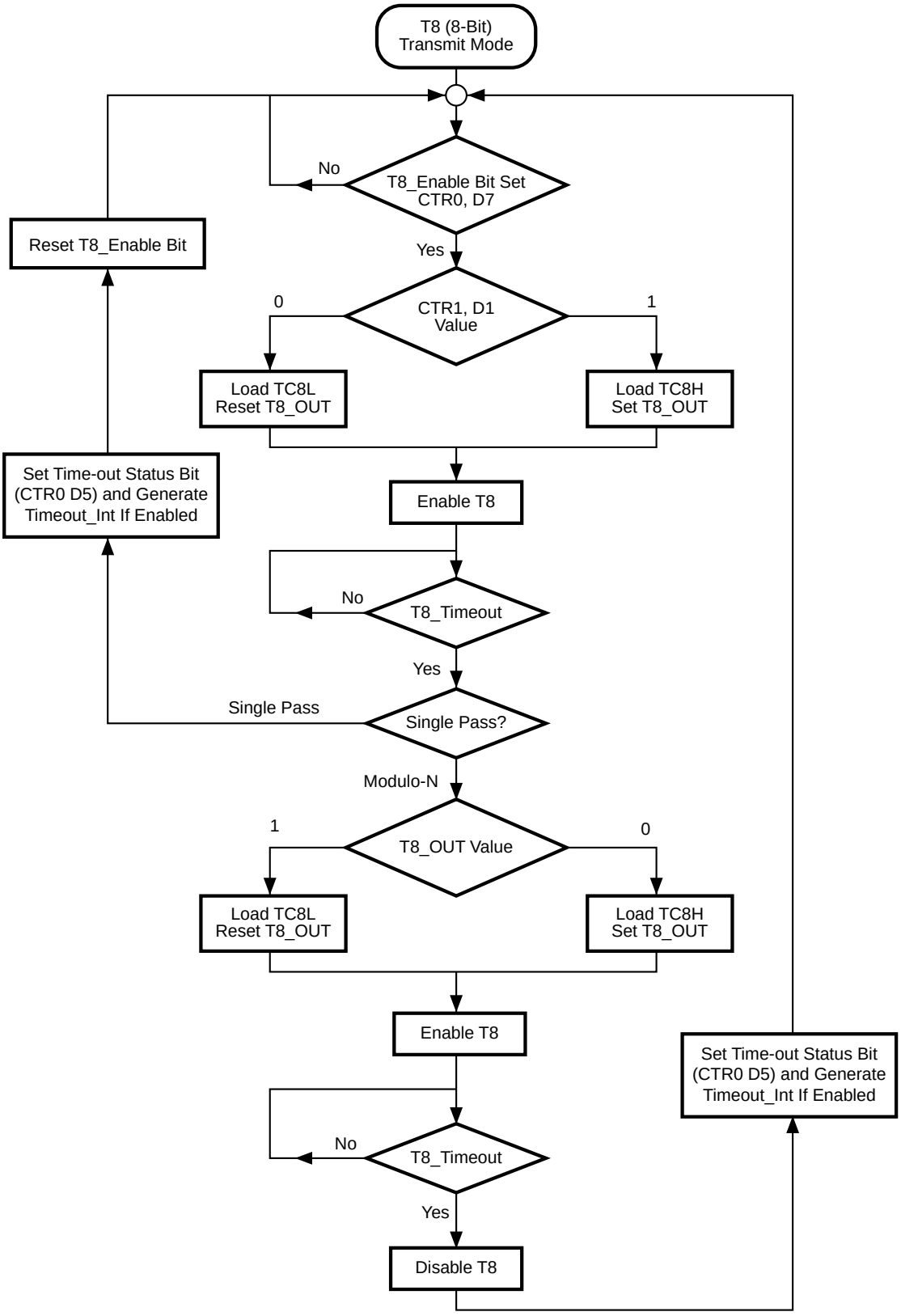

Figure 22. Transmit Mode Flowchart

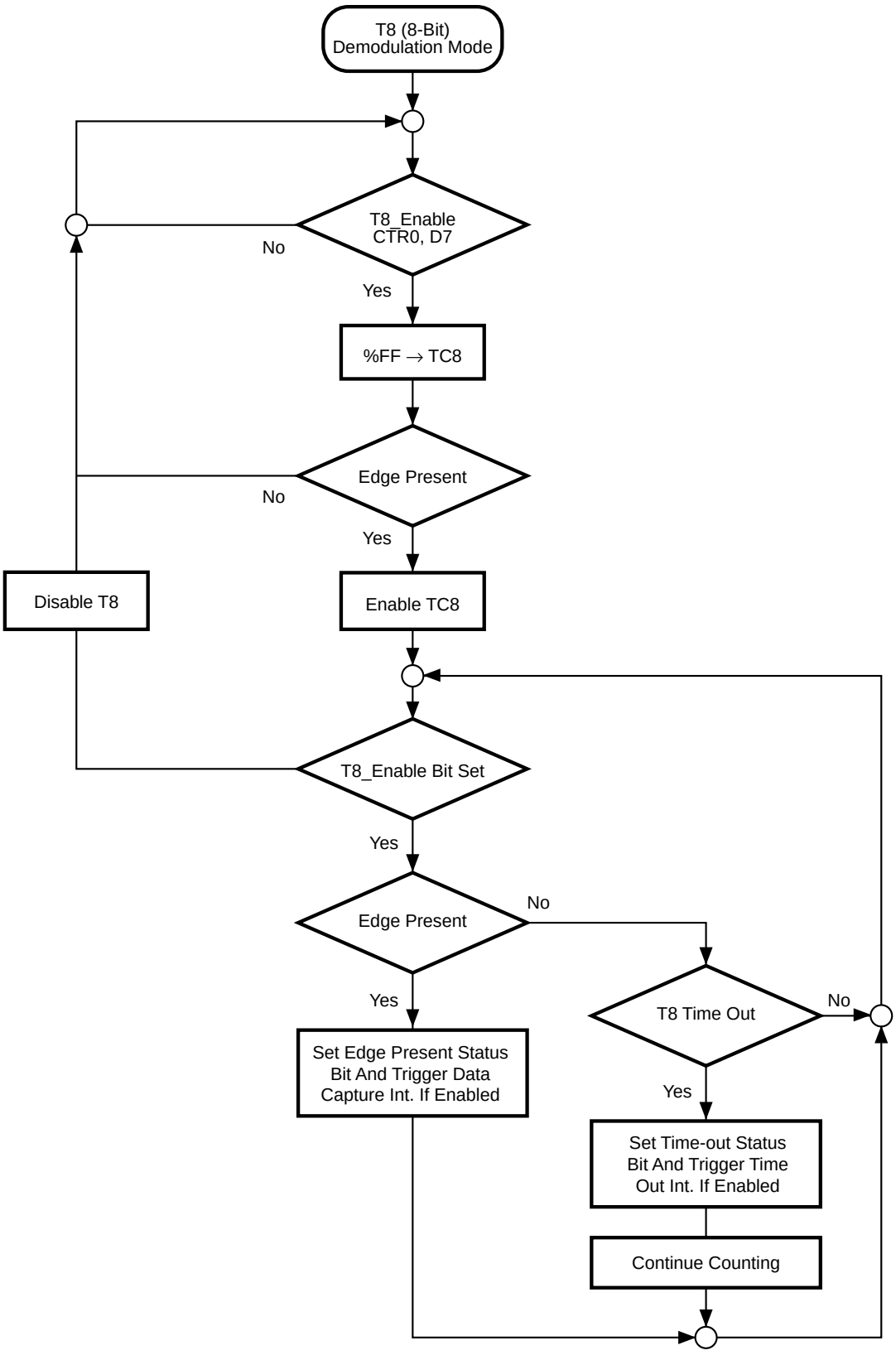

Figure 23. Demodulation Mode Flowchart

FUNCTIONAL DESCRIPTION (Continued)

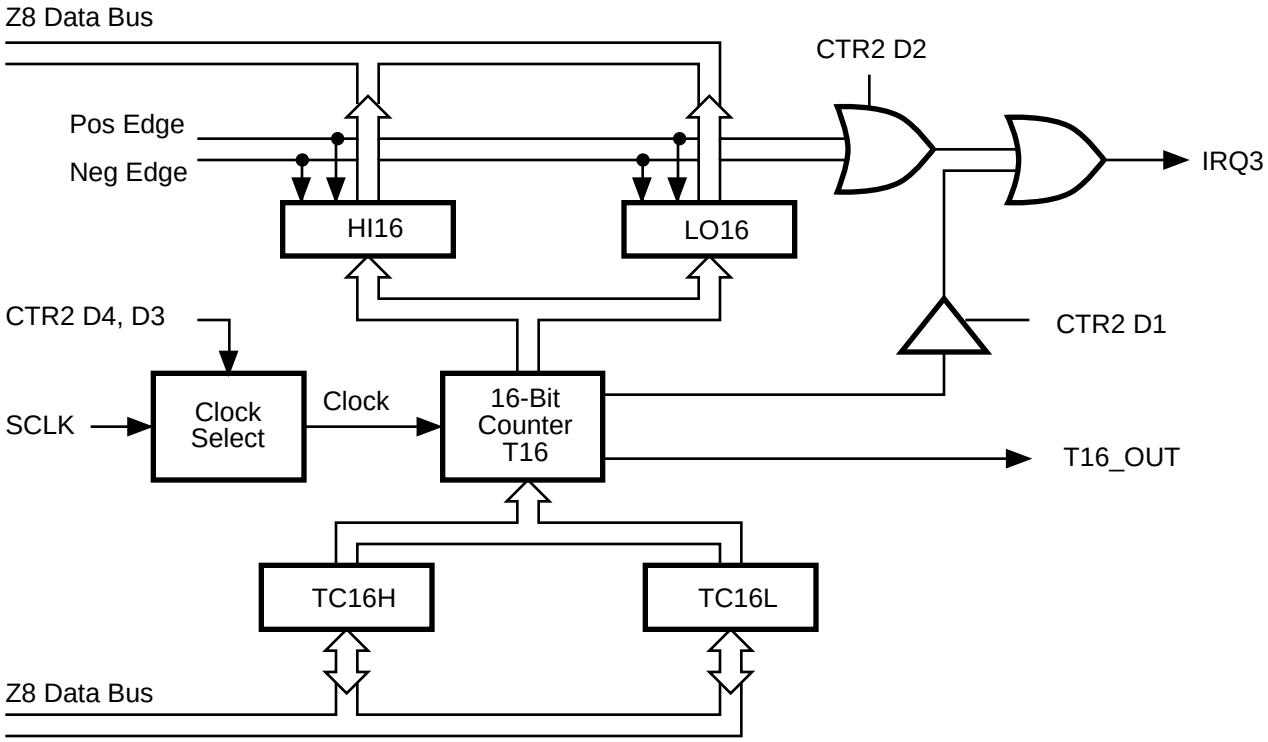

Figure 24. 16-Bit Counter/Timer Circuits

T16 Transmit Mode

In Normal or Ping-Pong Mode, the output of T16 when not enabled is dependent on CTR1, D0. If it is a 0, T16_OUT is a 1; if it is a 1, T16_OUT is 0. The user can force the output of T16 to either a 0 or 1 whether it is enabled or not by programming CTR1 D3, D2 to a 10 or 11.

When T16 is enabled, TC16H * 256 + TC16L is loaded, and T16_OUT is switched to its initial value (CTR1 D0). When T16 counts down to 0, T16_OUT is toggled (in Normal or Ping-Pong Mode), an interrupt is generated if enabled (CTR2 D1), and a status bit (CTR2 D5) is set. Note that global interrupts will override this function as described in the interrupts section. If T16 is in Single-Pass Mode, it is stopped at this point. If it is in Modulo-N Mode, it is loaded with TC16H * 256 + TC16L and the counting continues.

The user can modify the values in TC16H and TC16L at any time. The new values take effect when they are loaded. Care must be taken not to load these registers at the time the values are to be loaded into the counter/timer, to ensure known operation. An initial count of 1 is not allowed. An initial count of 0 will cause T16 to count from 0 to %FFFF to %FFFE. Transition from 0 to %FFFF is not a time-out condition.

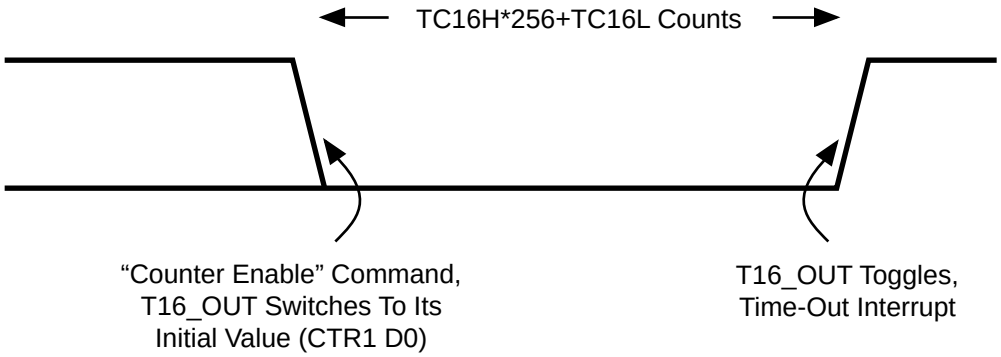

Figure 25. T16_OUT in Single-Pass Mode

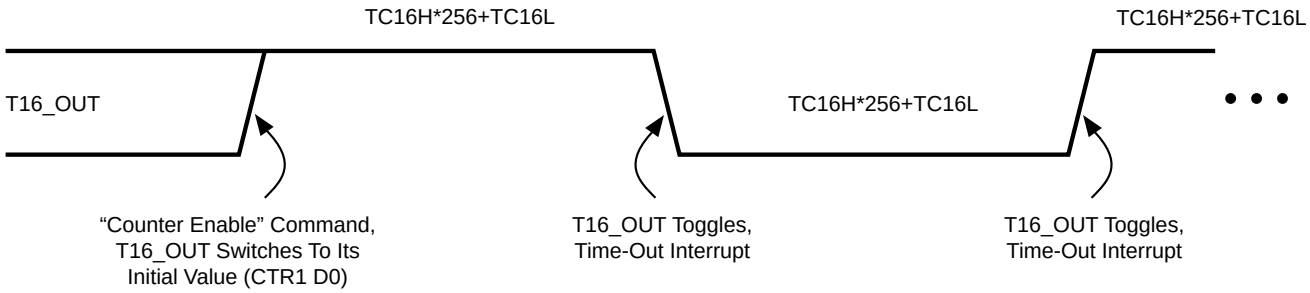

Figure 26. T16_OUT in Modulo-N Mode

T16 Demodulation Mode

The user should program TC16L and TC16H to %FF. After T16 is enabled, when the first edge (rising, falling, or both depending on CTR1 D5, D4) is detected, T16 captures HI16 and LO16 reloads and begins counting.

If D6 of CTR2 is 0: When a subsequent edge (rising, falling, or both depending on CTR1 D5, D4) is detected during counting, the current count in T16 is one's complemented and put into HI16 and LO16. When data is captured, one of the edge detect status bits (CTR1 D1, D0) is set and an interrupt is generated if enabled (CTR2 D2). T16 is loaded with %FFFF and starts again.

If D6 of CTR2 is 1: T16 ignores the subsequent edges in the input signal and continues counting down. A time out of T8 will cause T16 to capture its current value and generate an interrupt if enabled (CTR2, D2). In this case, T16 does not reload and continues counting. If D6 bit of CTR2 is toggled (by writing a 0 then a 1 to it), T16 will capture and reload on the next edge (rising, falling, or both depending on CTR1 D5, D4) but continue to ignore subsequent edges.

Should T16 reach 0, it continues counting from %FFFF; meanwhile, a status bit (CTR2 D5) is set and an interrupt time-out can be generated if enabled (CTR2 D1).

FUNCTIONAL DESCRIPTION (Continued)

Ping-Pong Mode

This operation mode is only valid in Transmit Mode. T8 and T16 need to be programmed in Single-Pass Mode (CTR0 D6, CTR2 D6) and Ping-Pong Mode needs to be programmed in CTR1 D3, D2. The user can begin the operation by enabling either T8 or T16 (CTR0 D1 or CTR2 D7). For example, if T8 is enabled, T8_OUT is set to this initial value (CTR1 D1). According to T8_OUT's level, TC8H or TC8L is loaded into T8. After the terminal count is reached, T8 is disabled and T16 is enabled. T16_OUT switches to its initial value (CTR1 D0), data from TC16H and TC16L is loaded, and T16 starts to count. After T16 reaches the terminal count it stops, T8 is enabled again, and the whole cycle repeats. Interrupts can be allowed when T8 or T16 reaches terminal control (CTR0 D1, CTR2 D1). To stop the Ping-Pong operation, write 00 to bits D3 and D2 of CTR1.

Note:Enabling Ping-Pong operation while the counter/timers are running may cause intermittent counter/timer function. Disable the counter/timers, then reset the status flags prior to instituting this operation.

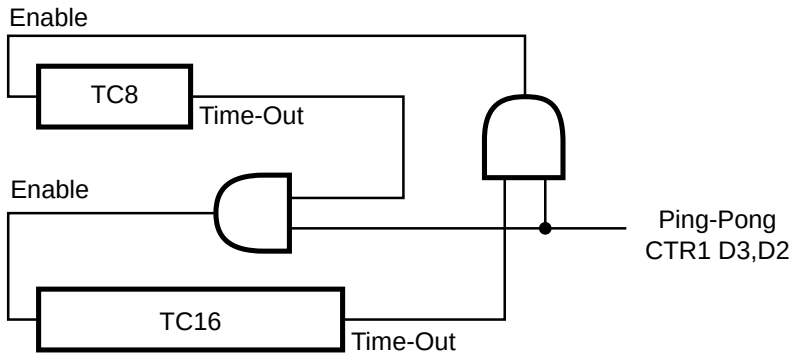

Figure 27. Ping-Pong Mode

To Initiate Ping-Pong Mode

First, make sure both counter/timers are not running. Then set T8 into Single-Pass Mode (CTR0 D6), set T16 into Single-Pass Mode (CTR2 D6), and set Ping-Pong Mode (CTR1 D2, D3). These instructions do not have to be in any particular order. Finally, start Ping-Pong Mode by enabling either T8 (CTR0 D7) or T16 (CTR2 D7).

During Ping-Pong Mode

The enable bits of T8 and T16 (CTR0 D7, CTR2 D7) will be alternately set and cleared by hardware. The time-out bits (CTR0 D5, CTR2 D5) will be set every time the counter/timers reach the terminal count.

To Terminate Ping-Pong Mode

Change Transmit Mode to Normal Mode (CTR1 D2, D3). Notice that Ping-Pong Mode is not actually stopped until one of the timer/counter's time-out. Before the actual termination of Ping-Pong Mode, the user should not change the value of CTR0 or CTR2, except for resetting the time-out status bit. Here is an example for terminating Ping-Pong Mode safely:

```
        or      CTR0,#%20           ;reset T8 time-out status bit
loop_a:
        tm      CTR0,#%20
        jr      z,loop_a            ;wait until T8 times-out
        ld      CTR1,#00000000b     ;change to Normal Mode
        or      CTR2,#%20           ;reset T16 time-out status bit
loop_b:
        tm      CTR2,#%20
        jr      z,loop_b            ;wait until T16 times-out
                                    ;now Ping-Pong Mode is actually
        ld      CTR0,#00100000b     ;terminated and user can re-program T8
        ld      CTR2,#00100000b     ;and T16
```

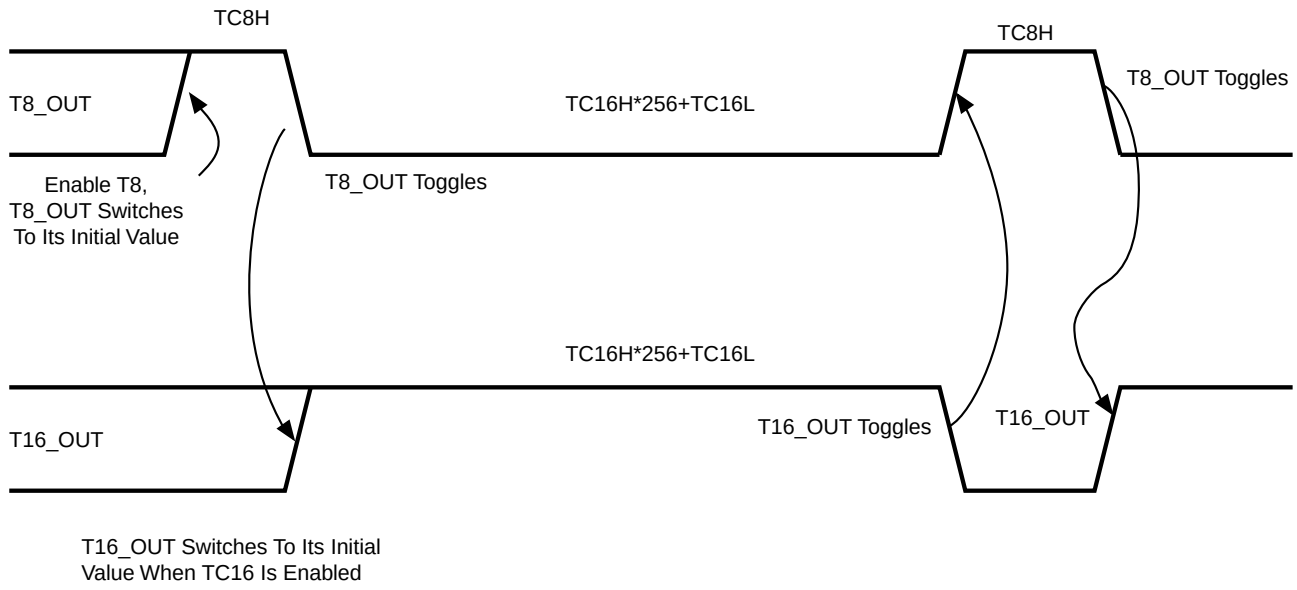

Figure 28. T8_OUT and T16_OUT in Ping-Pong Mode

FUNCTIONAL DESCRIPTION (Continued)

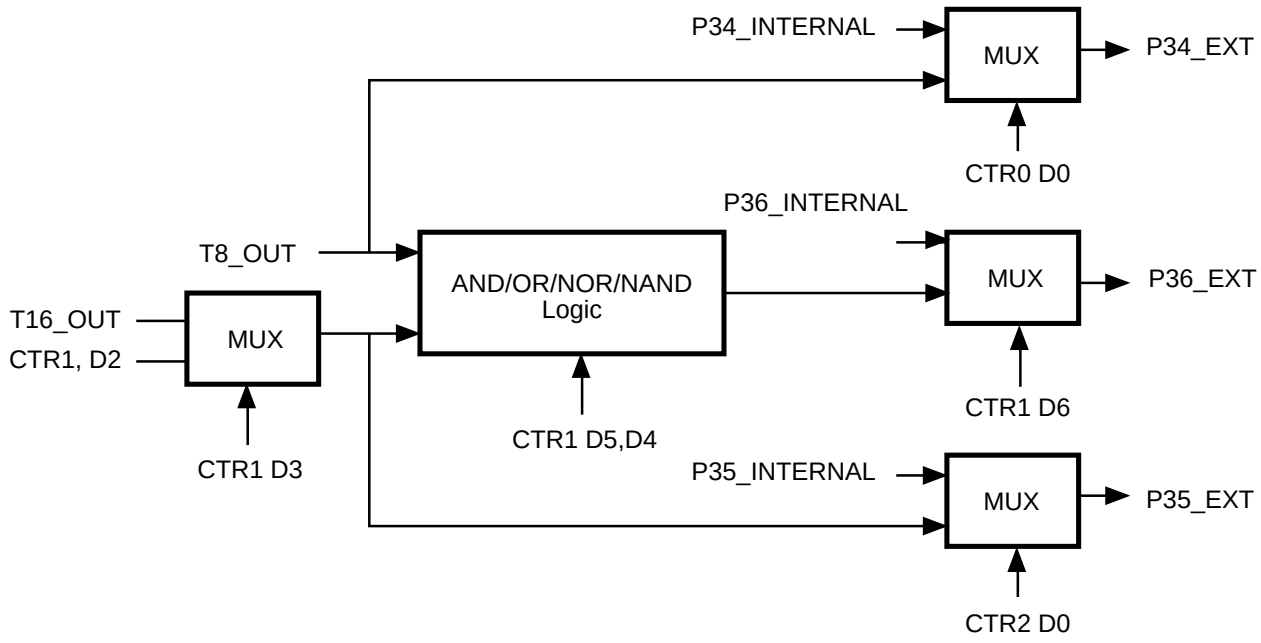

Figure 29. Output Circuit

Interrupts. The Z86L7X has five different interrupts. The interrupts are maskable and prioritized (Figure 30). The five sources are divided as follows: three sources are claimed by Port 3 lines P33-P31, the remaining two by the counter/timers (Table 3). The Interrupt Mask Register globally or individually enables or disables the five interrupt requests.

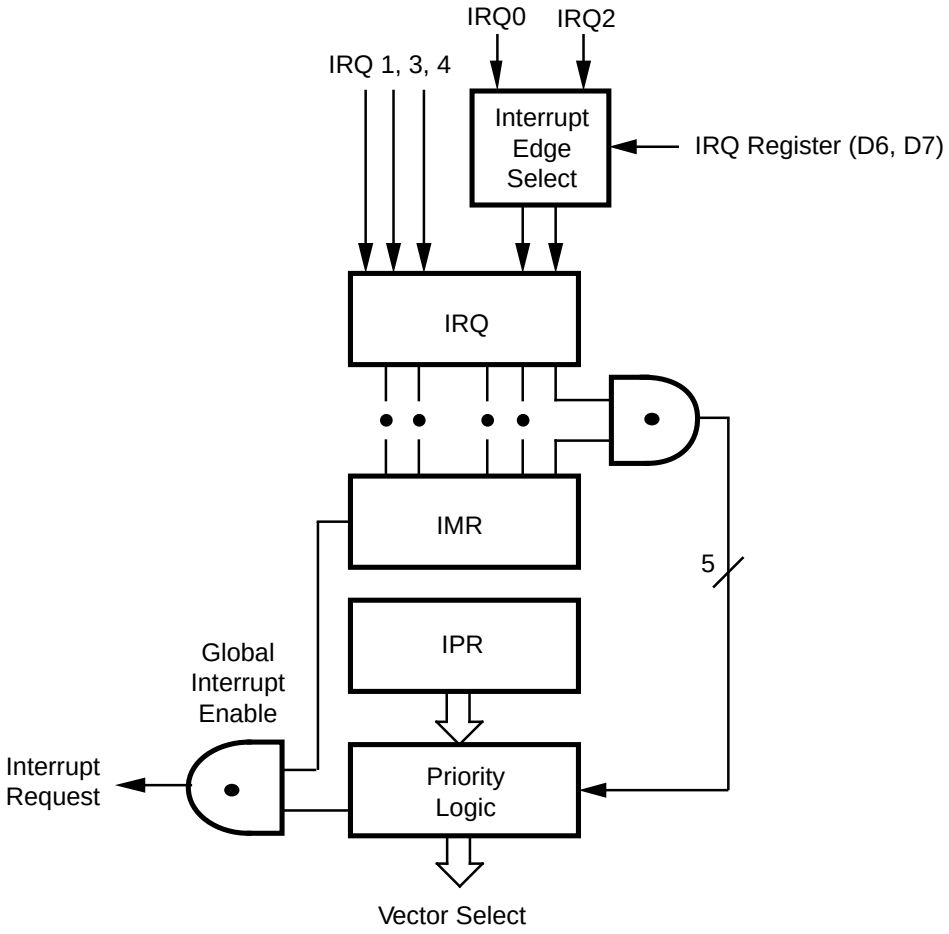

Figure 30. Interrupt Block Diagram

FUNCTIONAL DESCRIPTION (Continued)

Table 3. Interrupt Types, Sources, and Vectors

Name	Source	Vector Location	Comments
IRQ0	/DAV0, IRQ0	0, 1	External (P32), Rising Falling Edge Triggered
IRQ1,	IRQ1	2, 3	External (P33), Falling Edge Triggered
IRQ2	/DAV2, IRQ2, T_{IN}	4, 5	External (P31), Rising Falling Edge Triggered
IRQ3	T16	6, 7	Internal
IRQ4	T8	8, 9	Internal

When more than one interrupt is pending, priorities are resolved by a programmable priority encoder controlled by the Interrupt Priority register. An interrupt machine cycle is activated when an interrupt request is granted. This disables all subsequent interrupts, saves the Program Counter and Status Flags, and then branches to the program memory vector location reserved for that interrupt. All Z86L7X interrupts are vectored through locations in the program memory. This memory location and the next byte contain the 16-bit address of the interrupt service routine for that particular interrupt request. To accommodate polled interrupt systems, interrupt inputs are masked and the Interrupt Request register is polled to determine which of the interrupt requests need service.

An interrupt resulting from AN1 (P31) is mapped into IRQ2, and an interrupt from AN2 (P32) is mapped into IRQ0. Interrupts IRQ2 and IRQ0 may be rising, falling, or both edge triggered, and are programmable by the user. The software can poll to identify the state of the pin.

Programming bits for the Interrupt Edge Select are located in the IRQ Register (R250), bits D7 and D6 . The configuration is shown in Table 4.

Table 4. IRQ Register

IRQ		Interrupt Edge	
D7	D6	IRQ2 (P31)	IRQ0 (P32)
0	0	F	F
0	1	F	R
1	0	R	F
1	1	R/F	R/F

Notes:
F = Falling Edge
R = Rising Edge
In analog mode, the Stop-Mode Recovery sources selected by the SMR register are connected to the IRQ1 input. Any of the Stop-Mode Recovery sources for SMR (except P31, P32, and P33) can be used to generate IRQ1 (falling edge triggered)

Clock. The Z86L7X on-chip oscillator has a high-gain, parallel-resonant amplifier for connection to a crystal, LC, ceramic resonator, or any suitable external clock source (XTAL1 = Input, XTAL2 = Output). The crystal should be AT cut, 1 MHz to 8 MHz maximum, with a series resistance (RS) less than or equal to 100 Ohms. The Z86L7X on-chip oscillator may be driven with a cost-effective RC network or other suitable external clock source.

The crystal should be connected across XTAL1 and XTAL2 using the recommended capacitors (capacitance greater than or equal to 22 pF) from each pin to ground. The RC oscillator configuration is an external resistor connected from XTAL1 to XTAL2, with a frequency-setting capacitor from XTAL1 to ground (Figure 8).

Power-On Reset (POR). A timer circuit clocked by a dedicated on-board RC oscillator is used for the Power-On Reset (POR) timer function. The POR time allows V_{CC} and the oscillator circuit to stabilize before instruction execution begins.

The POR timer circuit is a one-shot timer triggered by one of three conditions:

1. Power Fail to Power OK status.
2. Stop-Mode Recovery (if D5 of SMR = 1).
3. WDT Time-Out.

The POR time is a nominal 5 ms. Bit 5 of the Stop-Mode Register determines whether the POR timer is bypassed after Stop-Mode Recovery (typical for external clock, RC, LC oscillators).

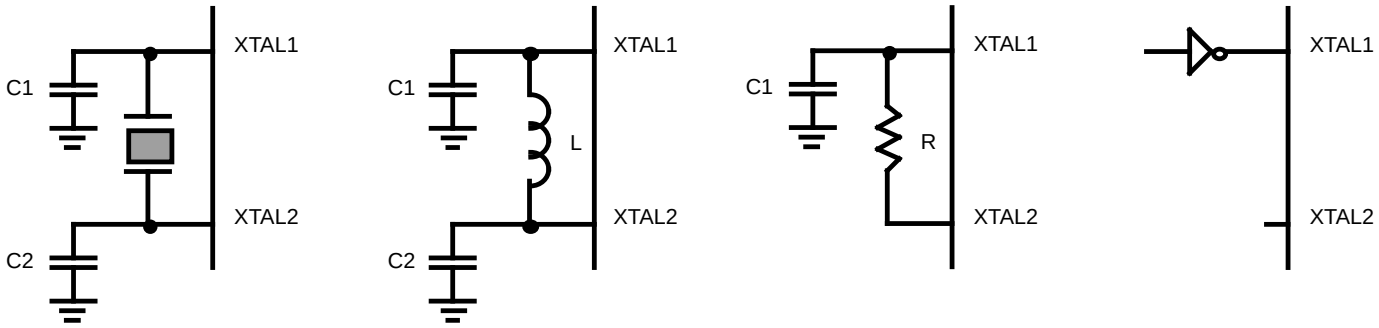

Ceramic Resonator or Crystal
C1, C2 = 47 pF TYP *
f = 8 MHz

* Preliminary value including pin parasitics

LC
C1, C2 = 22 pF

L = 130 µH *
f = 3 MHz *

RC
@ 3V VCC (TYP)

C1 = 33 pF *
R = 1K *

External Clock

Figure 31. Oscillator Configuration

FUNCTIONAL DESCRIPTION (Continued)

HALT. HALT turns off the internal CPU clock, but not the XTAL oscillation. The counter/timers and external interrupts IRQ0, IRQ1, IRQ2, IRQ3, and IRQ4 remain active. The devices are recovered by interrupts, either externally or internally generated. An interrupt request must be executed (enabled) to exit HALT Mode. After the interrupt service routine, the program continues from the instruction after the HALT.

STOP. This instruction turns off the internal clock and external crystal oscillation and reduces the standby current to 10 μA or less. STOP Mode is terminated only by a reset, such as WDT time-out, POR, SMR, or external reset. This causes the processor to restart the application program at address 000CH. In order to enter STOP (or HALT) mode, it is necessary to first flush the instruction pipeline to avoid suspending execution in mid-instruction. To do this, the user must execute a NOP (opcode = FFH) immediately before the appropriate sleep instruction, i.e.,

```
FF      NOP     ; clear the pipeline
6F      STOP    ; enter STOP Mode
        or
FF      NOP     ; clear the pipeline
7F      HALT    ; enter HALT Mode
```

Port Configuration Register (PCON). The PCON register configures the comparator output on Port 3. It is located in the expanded register file at Bank F, location 00 (Figure 32).

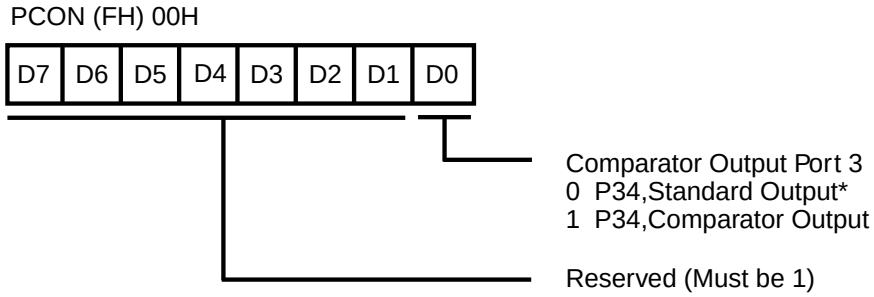

* Default Setting After Reset

Figure 32. Port Configuration Register (PCON) (Write Only)

Comparator Output Port 3 (D0). Bit 0 controls the comparator used in Port 3. A 1 in this location brings the comparator outputs to P34 and P37, and a 0 releases the Port to its standard I/O configuration.

Stop-Mode Recovery Register (SMR). This register selects the clock divide value and determines the mode of Stop-Mode Recovery (Figure 33). All bits are write only except bit 7, which is read only. Bit 7 is a flag bit that is hardware set on the condition of STOP recovery and reset by a power-on cycle. Bits D2, D3, and D4, of the SMR register, specify the source of the Stop-Mode Recovery signal. Bit D0 determines if SCLK/TCLK are divided by 16 or not. The SMR is located in Bank F of the Expanded Register Group at address 0BH.

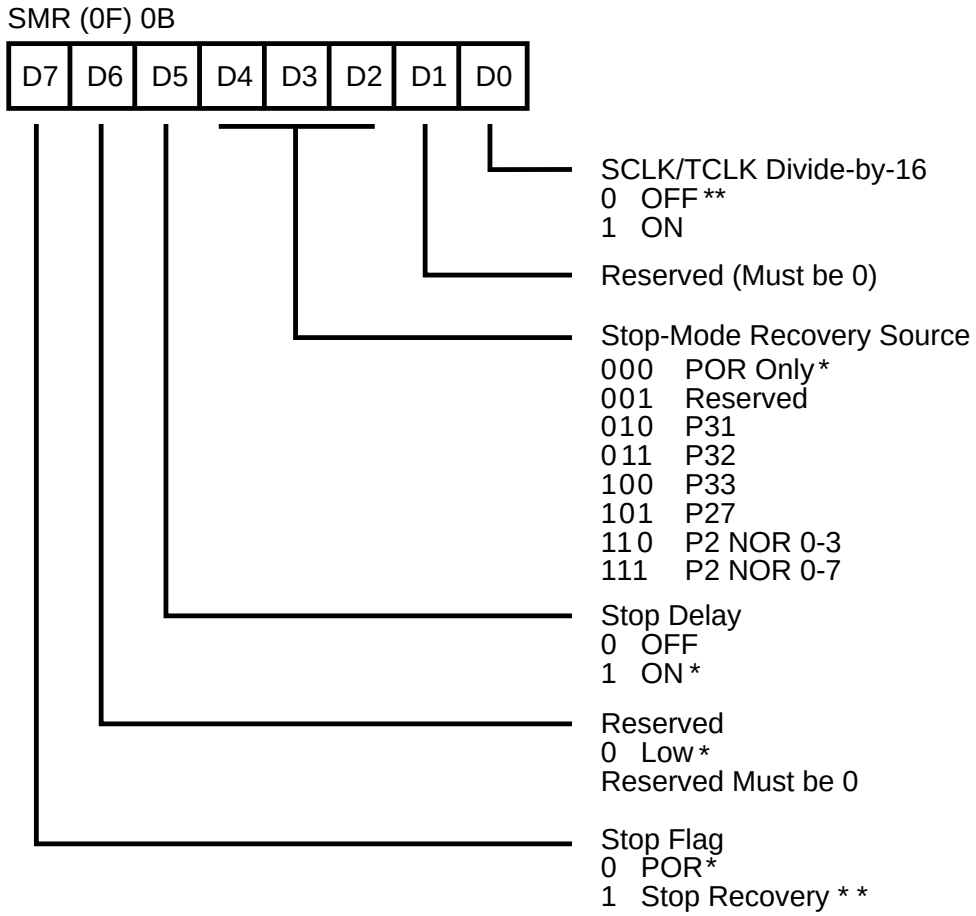

* Default Setting After Reset
** Default Setting After Reset and Stop-Mode Recovery

Figure 33. Stop-Mode Recovery Register

FUNCTIONAL DESCRIPTION (Continued)

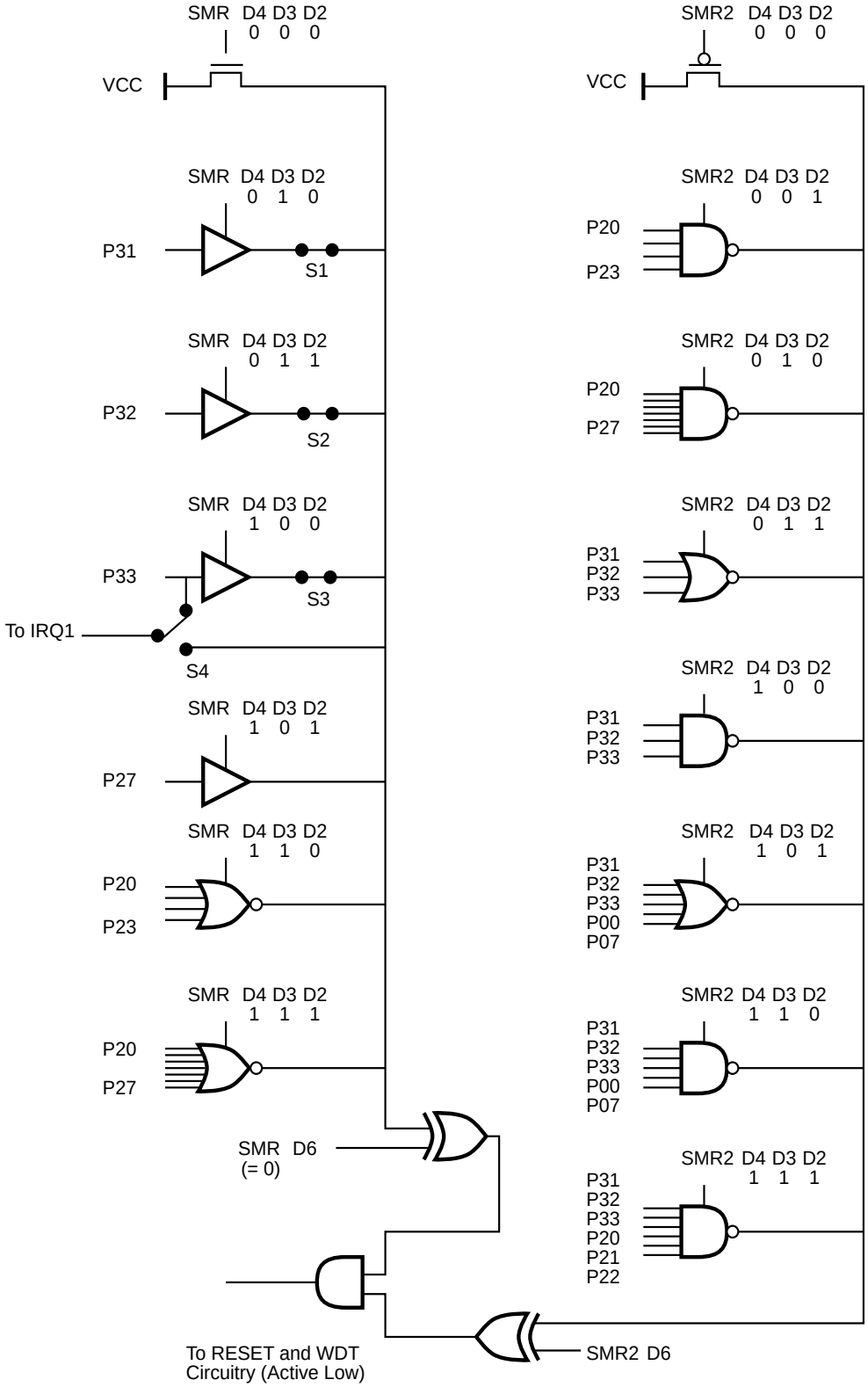

Figure 34. Stop-Mode Recovery Source

SCLK/TCLK Divide-by-16 Select (D0). D0 of the SMR controls a Divide-by-16 prescaler of SCLK/TCLK. The purpose of this control is to selectively reduce device power consumption during normal processor execution (SCLK control) and/or HALT Mode (where TCLK sources interrupt logic). After Stop-Mode Recovery, this bit is set to a 0.

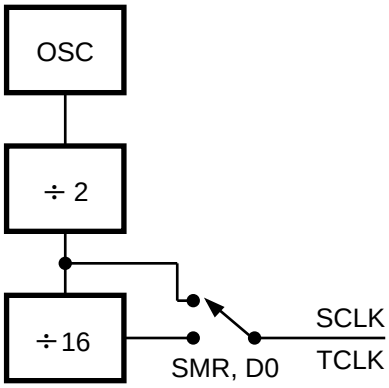

Figure 35. SCLK Circuit

Stop-Mode Recovery Source (D2, D3, and D4). These three bits of the SMR specify the wake up source of the STOP recovery (Figure 36 and Table 5).

Table 5. Stop-Mode Recovery Source

SMR:432			Operation
D4	**D3**	**D2**	**Description of Action**
0	0	0	POR and/or external reset recovery
0	0	1	Reserved
0	1	0	P31 transition
0	1	1	P32 transition
1	0	0	P33 transition
1	0	1	P27 transition
1	1	0	Logical NOR of P20 through P23
1	1	1	Logical NOR of P20 through P27

P33-P31 cannot wake up from STOP Mode if the input lines are configured as analog input.

Note: Port pins defined as an output will drive the corresponding input to the default state to allow the remaining inputs to control the AND/OR function. Refer to SMR2 register for other recover sources.

Stop-Mode Recovery Delay Select (D5). This bit, if Low, disables the 5 ms /RESET delay after Stop-Mode Recovery. The default configuration of this bit is one. If the "fast" wake up is selected, the Stop-Mode Recovery source needs to be kept active for at least 5TpC.

Stop-Mode Recovery Edge Select (D6). A 1 in this bit position indicates that a High level on any one of the recovery sources wakes the Z86L7X from STOP Mode. A 0 indicates Low level recovery. The default is 0 on POR (Figure 36).

Cold or Warm Start (D7). This bit is set by the device upon entering STOP Mode. It is a Read Only Flag bit. A 1 in D7 (warm) indicates that the device will awaken from a SMR source or a WDT while in STOP Mode. A 0 in this bit (cold) indicates that the device will be reset by a POR, WDT while not in STOP, or the device awakened a low voltage standby mode.

Stop-Mode Recovery Register 2 (SMR). This register determines the mode of the Stop-Mode Recovery for SMR2.

If SMR2 is used in conjunction with SMR, either of the specified events will cause a Stop-Mode Recovery.

FUNCTIONAL DESCRIPTION (Continued)

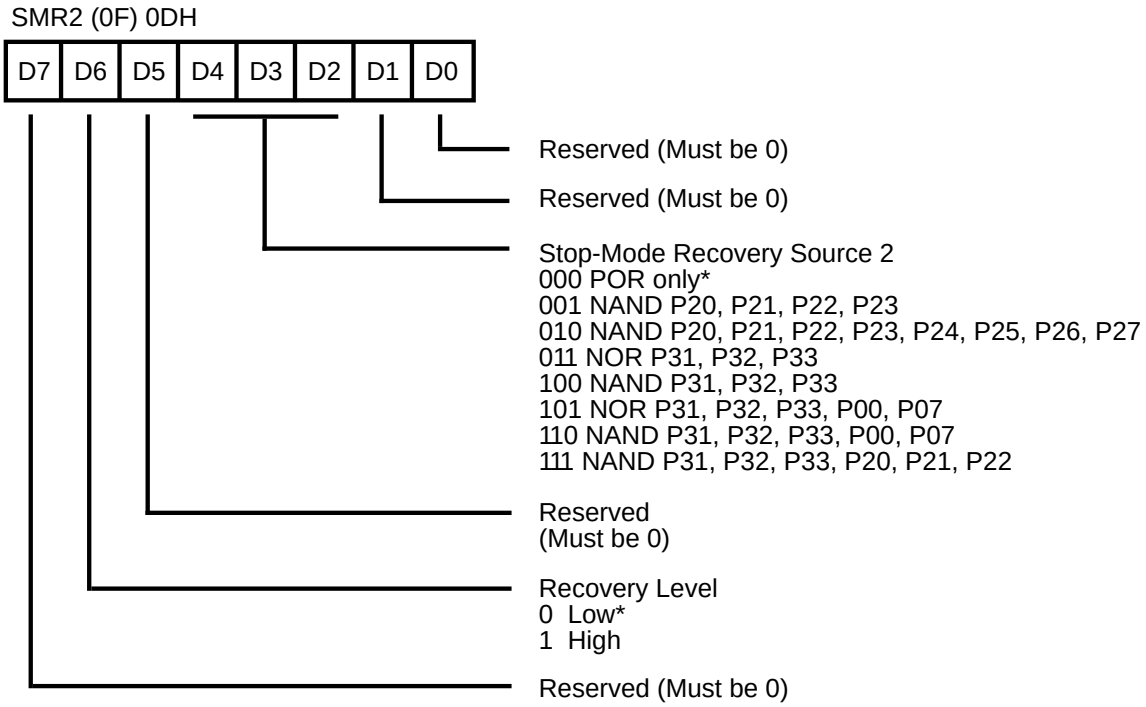

Note: If used in conjunction with SMR, either of the two specified events will cause a Stop-Mode Recovery.

*Default Setting After Reset

Figure 36. Stop-Mode Recovery Register 2 ((0F) 0DH: D2-D4: D6 Write Only)

Watch-Dog Timer Mode Register (WDTMR). The WDT is a retriggerable one-shot timer that resets the Z8 if it reaches its terminal count. The WDT must initially be enabled by executing the WDT instruction and refreshed on subsequent executions of the WDT instruction. The WDT circuit is driven by an on-board RC oscillator or external oscillator from the XTAL1 pin. The WDT instruction affects the Zero (Z), Sign (S), and Overflow (V) flags.

The POR clock source is selected with bit 4 of the WDT register. Bit 0 and 1 control a tap circuit that determines the time-out period. Bit 2 determines whether the WDT is active during HALT and Bit 3 determines WDT activity during STOP. Bits 5 through 7 are reserved (Figure 37). This register is accessible only during the first 64 processor cycles (128 XTAL clocks) from the execution of the first instruction after Power-On-Reset, Watch-Dog Reset, or a Stop-Mode Recovery (Figure 40). After this point, the register cannot be modified by any means, intentional or otherwise. The WDTMR cannot be read and is located in Bank F of the Expanded Register Group at address location 0FH. It is organized as follows:

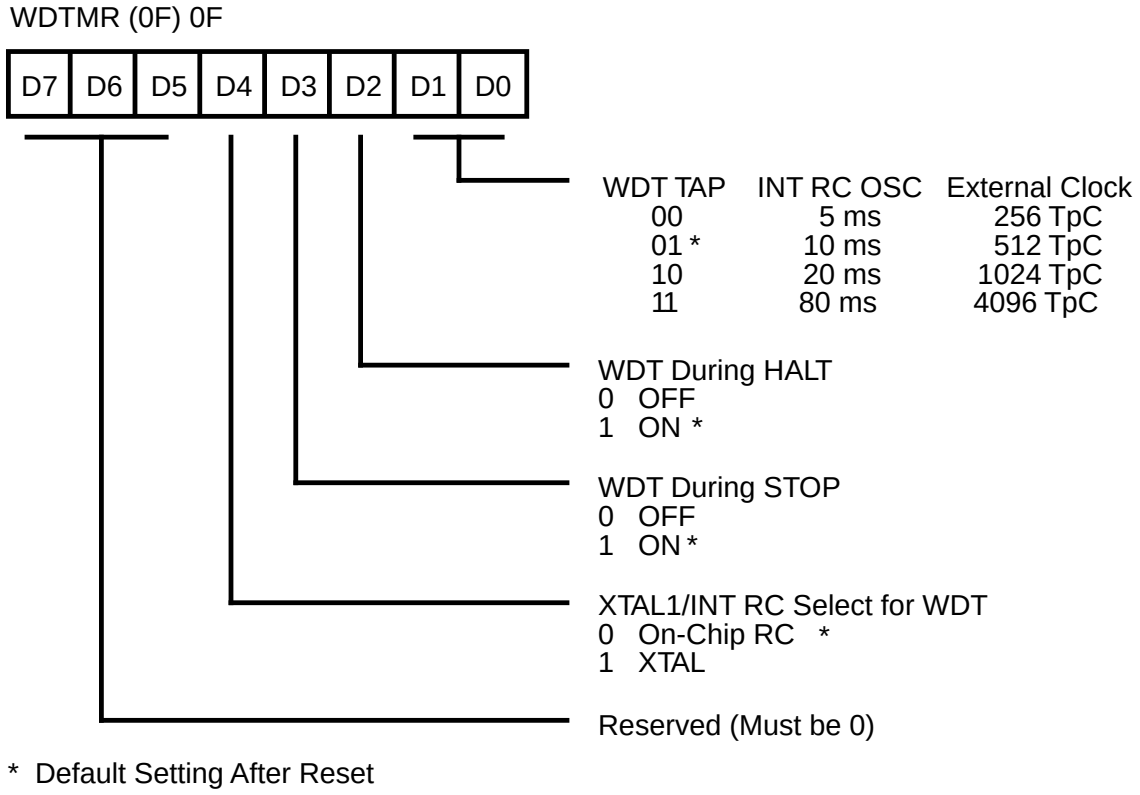

Figure 37. Watch-Dog Timer Mode Register (Write Only)

FUNCTIONAL DESCRIPTION (Continued)

WDT Time Select (D0, D1). Selects the WDT time period. It is configured as shown in Table 6.

Table 6. WDT Time Select

D1	D0	Time-Out of Internal RC OSC	Time-Out of XTAL Clock
0	0	5 ms min	256 TpC
0	1	10 ms min	512 TpC
1	0	20 ms min	1024 TpC
1	1	80 ms min	4096 TpC

Notes:
1. TpC = XTAL clock cycle.
2. The default on reset is 10 ms.

WDTMR During HALT (D2). This bit determines whether or not the WDT is active during HALT Mode. A 1 indicates active during HALT. The default is 1.

WDTMR During STOP (D3). This bit determines whether or not the WDT is active during STOP Mode. Since the XTAL clock is stopped during STOP Mode, the on-board RC has to be selected as the clock source to the WDT/POR counter. A 1 indicates active during STOP. The default is 1.

Clock Source for WDT (D4). This bit determines which oscillator source is used to clock the internal POR and WDT counter chain. If the bit is a 1, the internal RC oscillator is bypassed and the POR and WDT clock source is driven from the external pin, XTAL1. The default configuration of this bit is 0, which selects the RC oscillator.

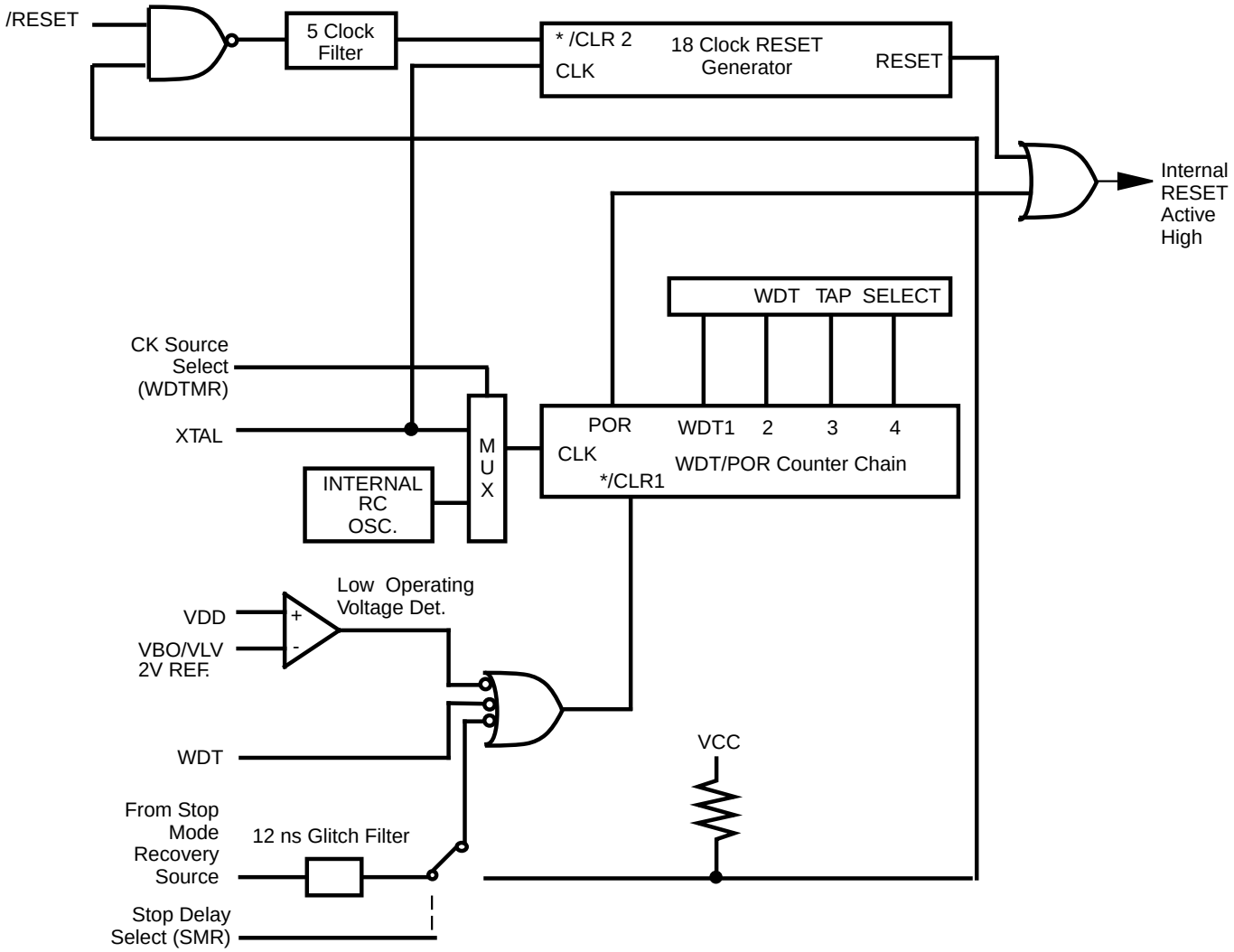

* /CLR1 and /CLR2 enable the WDT/POR and
18 Clock Reset timers upon a Low to High input transition.

Figure 38. Resets and WDT

FUNCTIONAL DESCRIPTION (Continued)

Low Voltage Detection/Protection. An on-chip Voltage Comparator checks that the V_{CC} is at the required level for correct operation of the device. Reset is globally driven when V_{CC} falls below V_{LV} (Vrf1).

Mask Selectable Options. There are six Mask Selectable Options to choose from based on ROM code requirements.

Permanent Watch-Dog Timer	On/WDT command invoked
RAM Protect	On/Off
ROM Protect	On/Off
32 kHz XTAL	On/Off
Port 00-07 Pull-ups	On/Off
Port 31-33 Pull-ups	On/Off
Port 20-27 Pull-ups	On/Off

Note: Internal Port 0/Pull-Up resistors remain connected when port pins are configured as outputs.

The Low Voltage trip voltage (V_{LV}) is less than 2.1V under the following conditions:

Maximum (V_{LV}) Conditions:

T_A = 0°C, +55°C Internal clock frequency equal to or less than 4.0 MHz

Note: The internal clock frequency is one-half the external clock frequency.

The device is guaranteed to function normally until the Low Voltage Protection trip point V_{LV} is reached, below which reset is globally driven. The device is guaranteed to function normally at supply voltages above the V_{LV} trip point for the temperatures and operating frequencies in maximum V_{LV} conditions. The actual V_{LV} trip point is a function of temperature and process parameters (Figure 39).

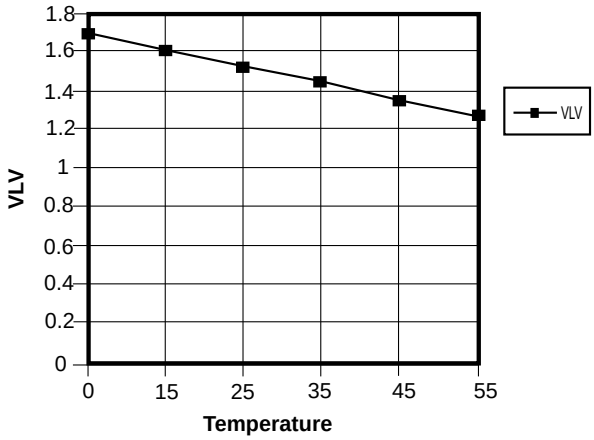

Figure 39. Typical Z86L7X Low Voltage vs Temperature at 8 MHz

EXPANDED REGISTER FILE CONTROL REGISTERS (0D)

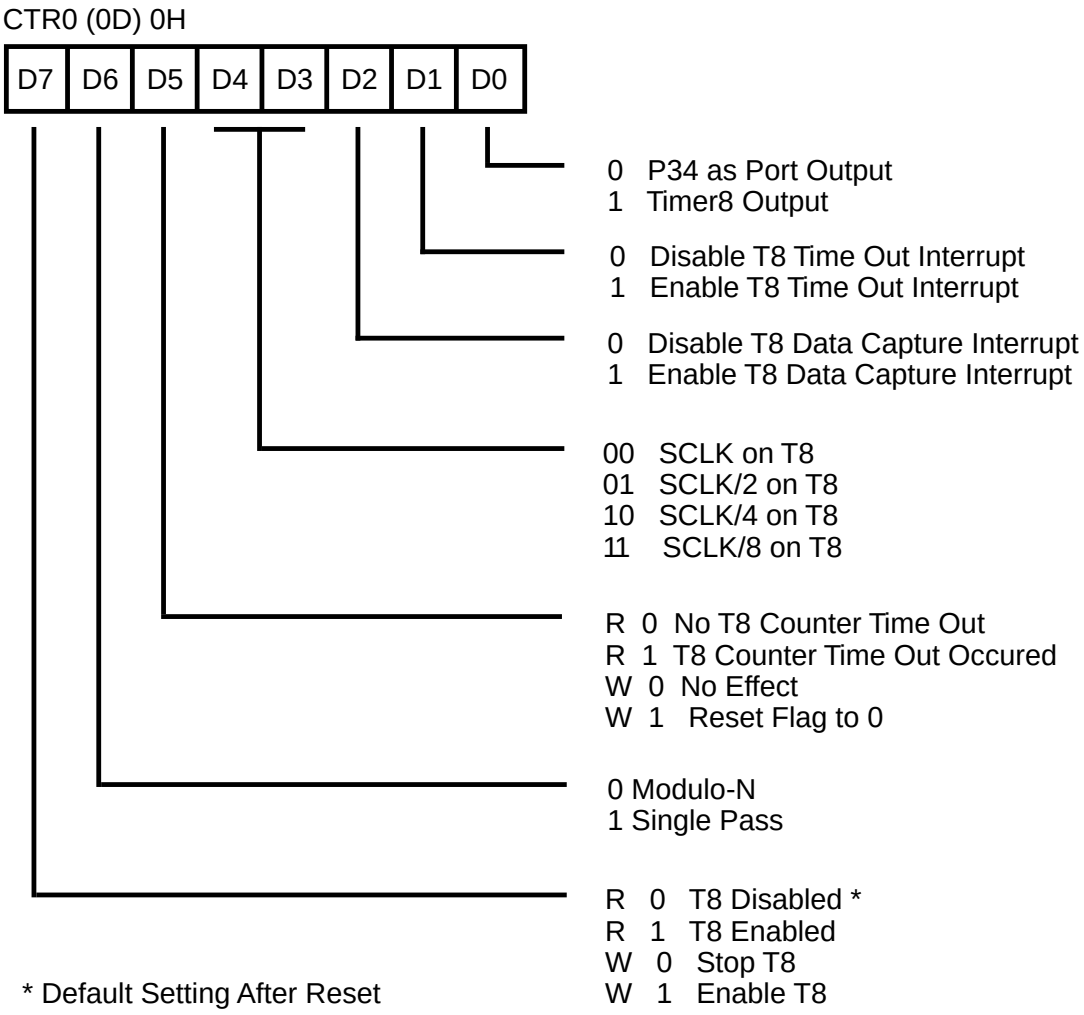

Figure 40. TC8 Control Register
((0D) 0H: Read/Write Except Where Noted)

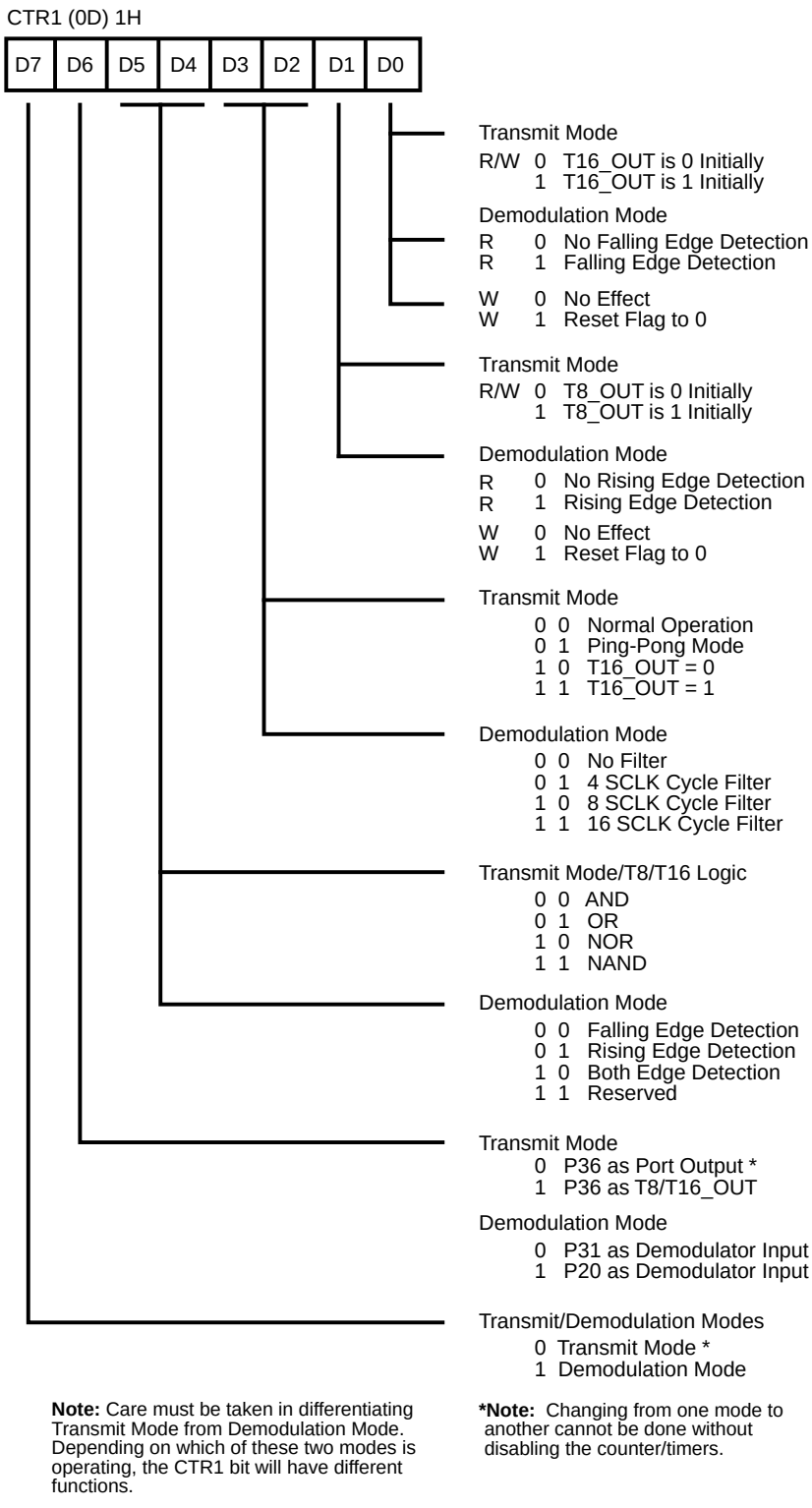

Figure 41. T8 and T16 Common Control Functions ((0D) 1H: Read/Write)

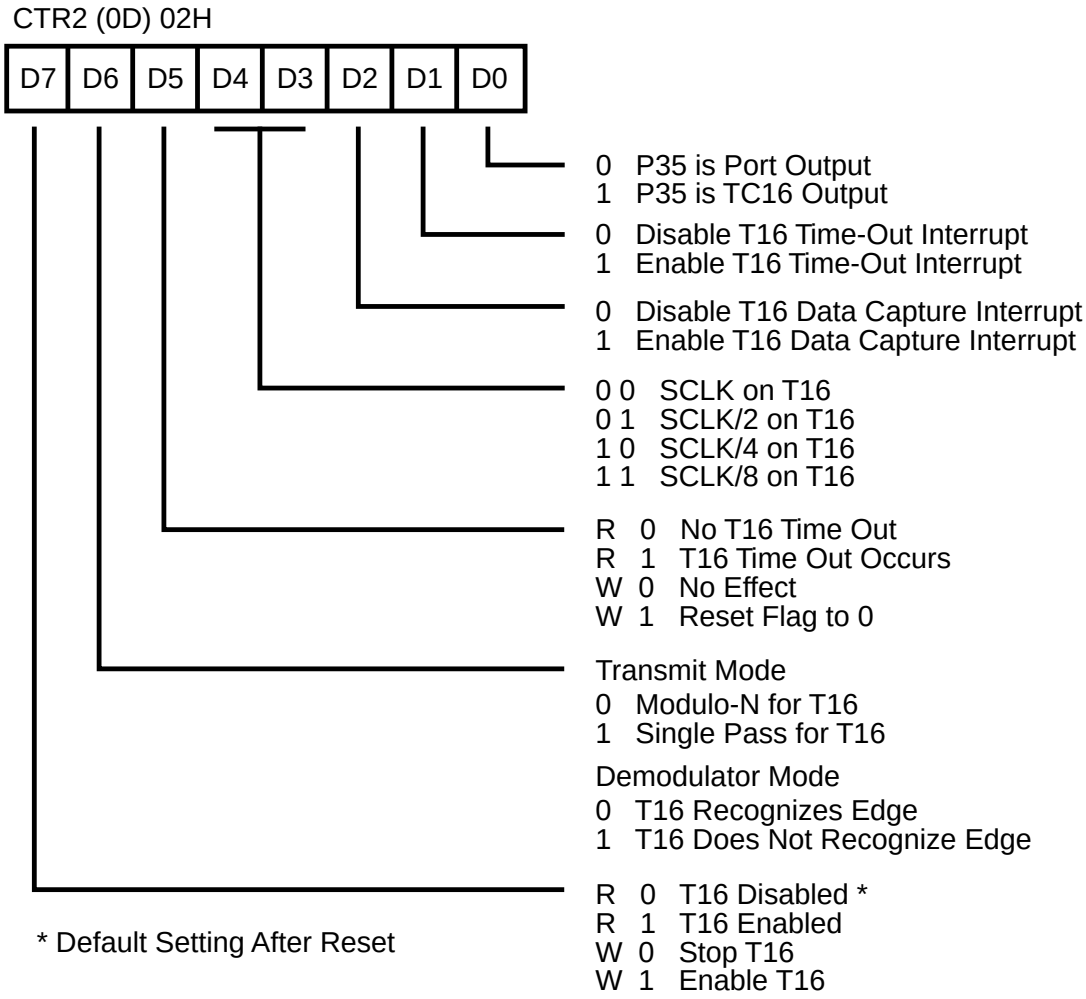

Figure 42. T16 Control Register
((0D) 2H: Read/Write Except Where Noted)

EXPANDED REGISTER FILE CONTROL REGISTERS (0D) (Continued)

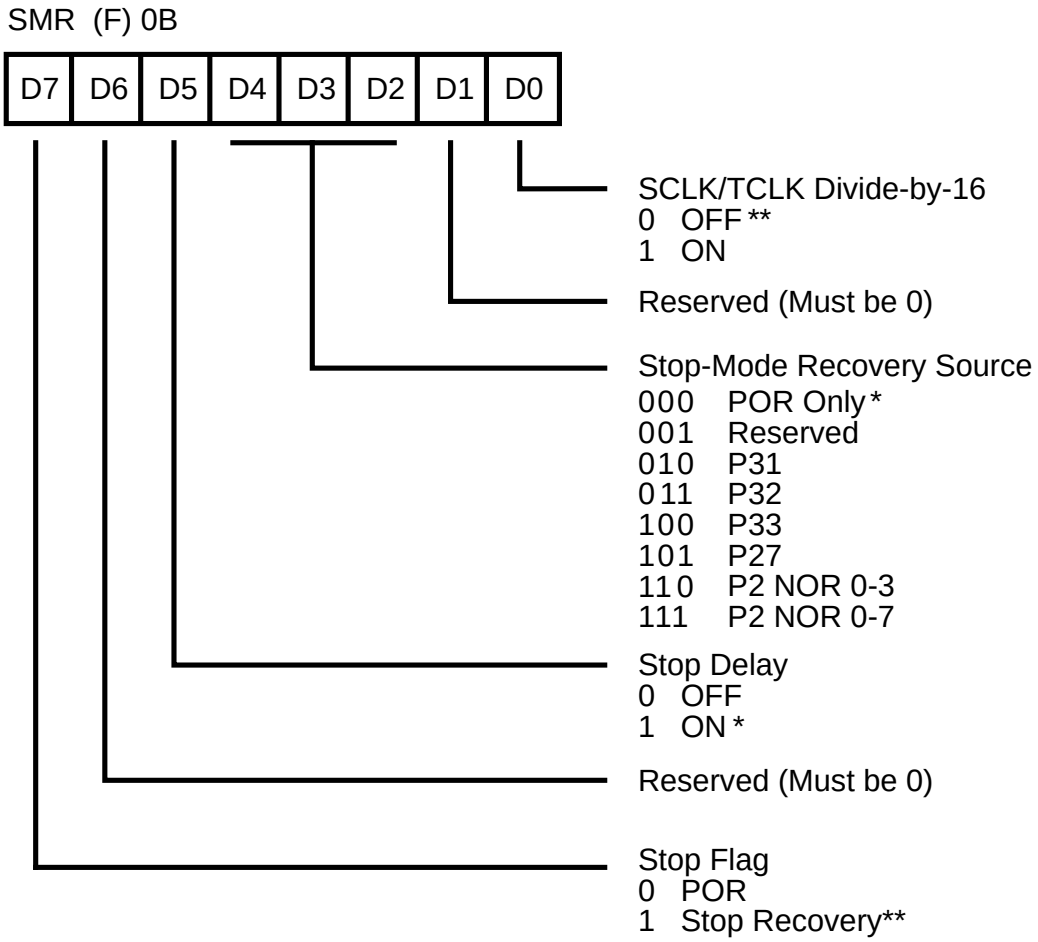

* Default Setting After Reset
** Default Setting After Reset and Stop-Mode Recovery

Figure 43. Stop-Mode Recovery Register ((F) 0BH: D6-D0 = Write Only, D7 = Read Only)

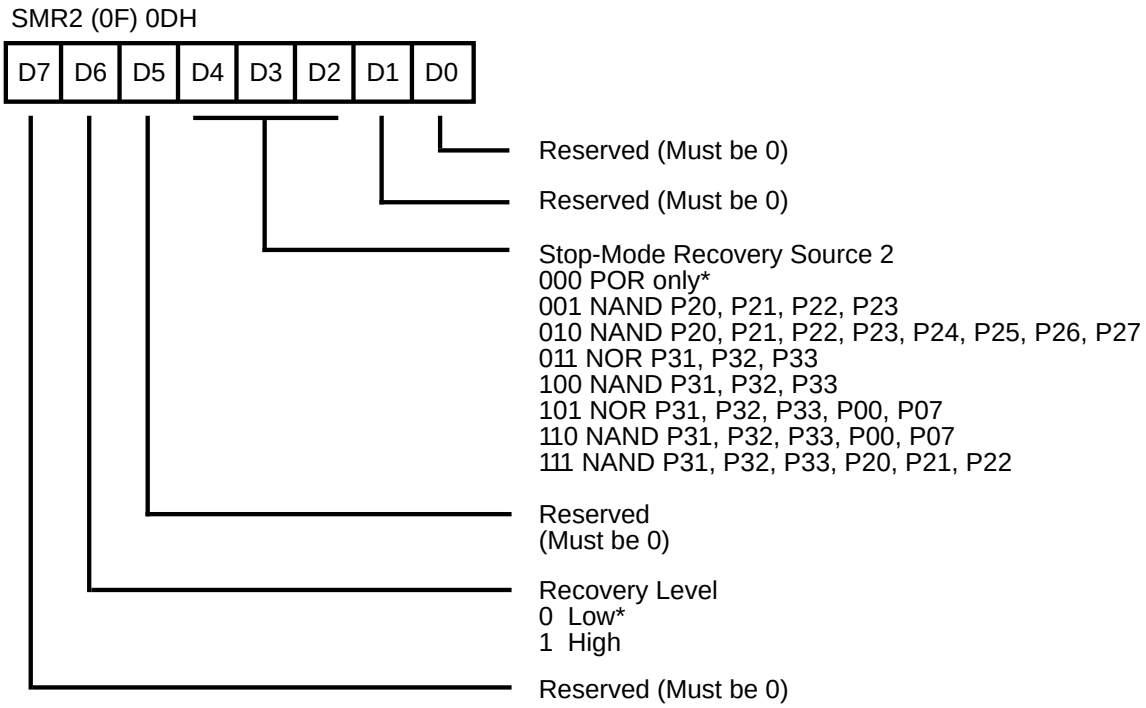

Note: If used in conjunction with SMR, either of the two specified events will cause a Stop-Mode Recovery.

*Default Setting After Reset

Figure 44. Stop-Mode Recovery Register 2 ((0F) 0DH: D2-D4, D6 Write Only)

EXPANDED REGISTER FILE CONTROL REGISTERS (0D) (Continued)

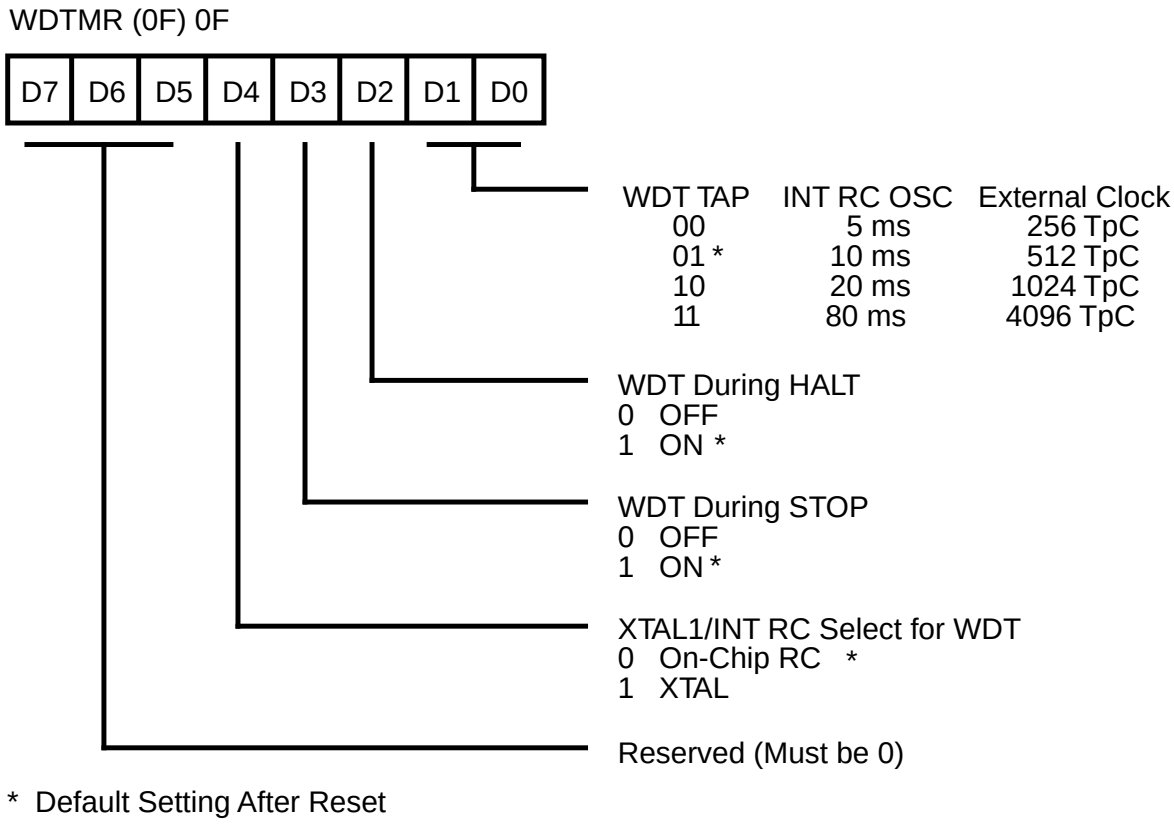

Figure 45. Watch-Dog Timer Mode Register ((F) OFH: Write Only)

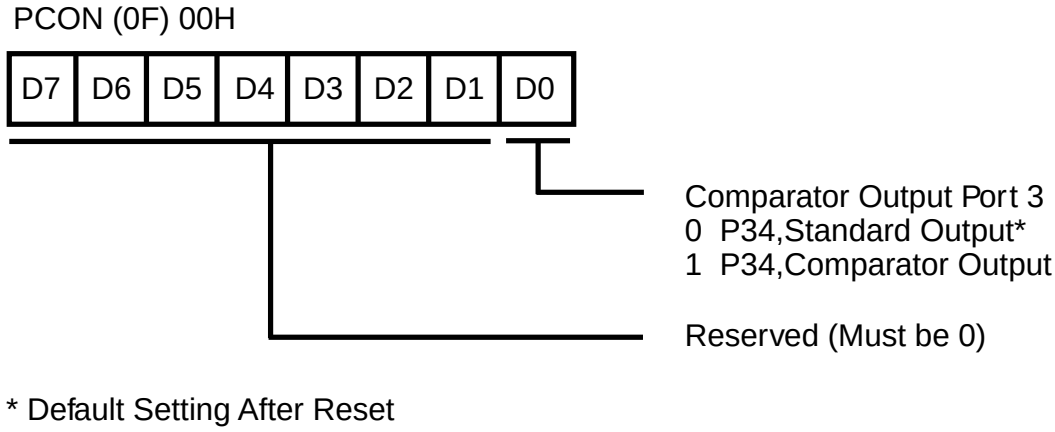

Figure 46. Port Configuration Register (PCON) ((0F) OH: Write Only)

Z8 STANDARD CONTROL REGISTER DIAGRAMS

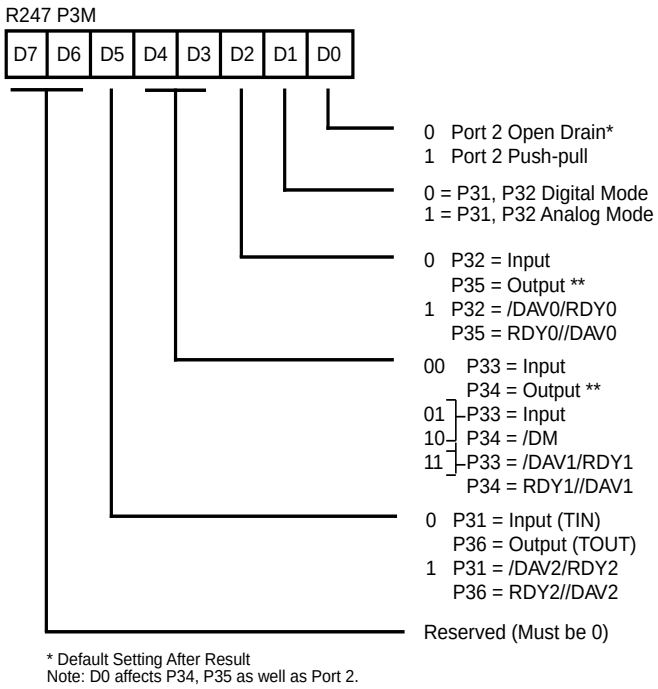

Figure 47. Port 3 Mode Register (F7H: Write Only)

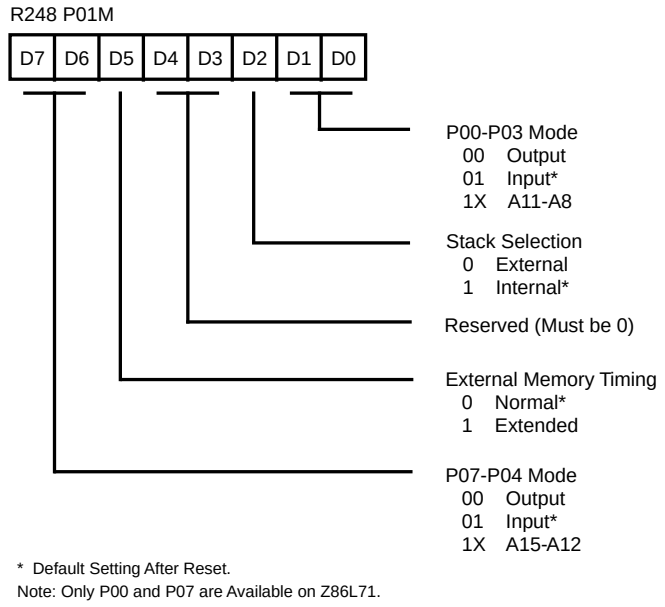

Figure 48. Port 0 and 1 Mode Register (F8H: Write Only)

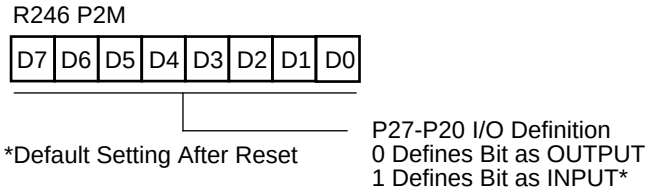

Figure 49. Port 2 Mode Register (F8H: Write Only)

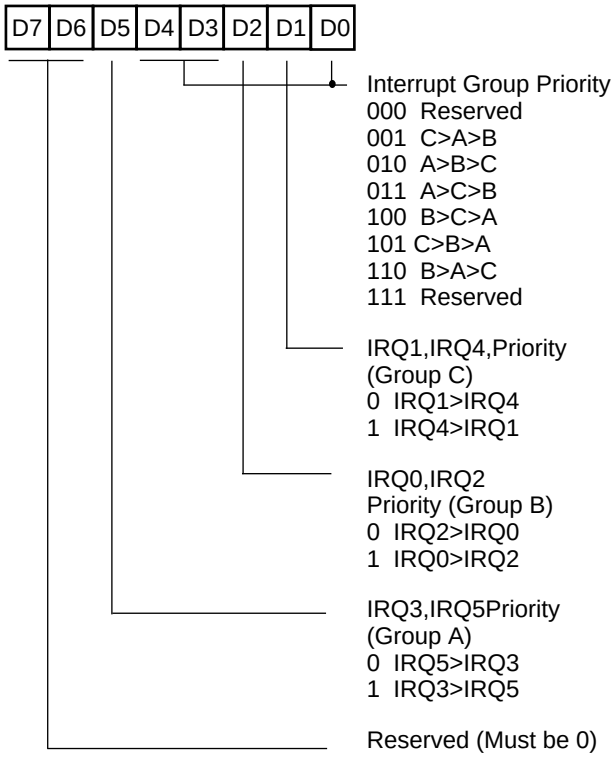

Figure 50. Interrupt Priority Register ((0) F9H: Write Only)

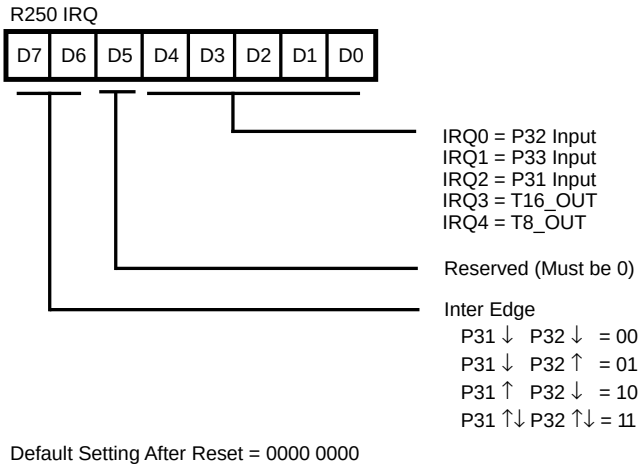

Figure 51. Interrupt Request Register ((0) FAH: Read/Write)

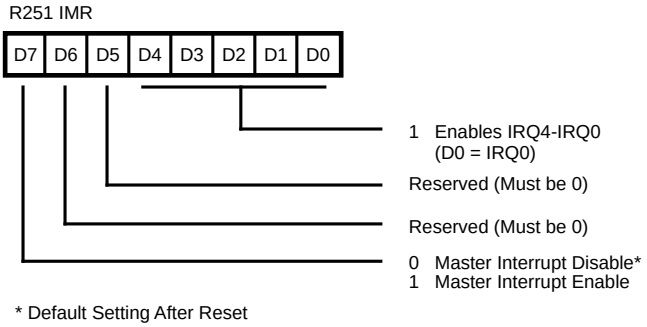

Figure 52. Interrupt Mask Register ((0) FBH: Read/Write)

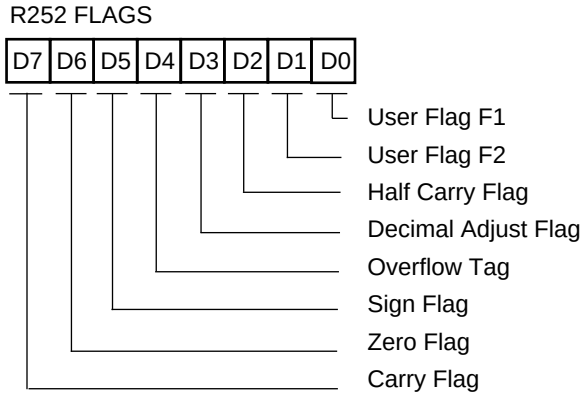

Figure 53. Flag Register ((0) FCH: Read/Write)

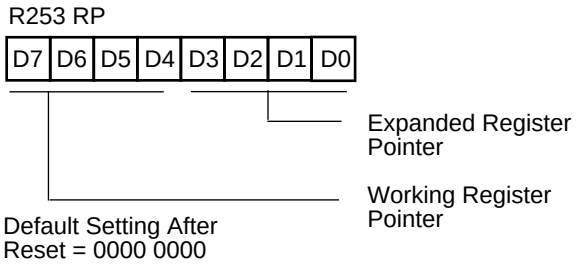

Figure 54. Register Pointer ((0) FDH: Read/Write)

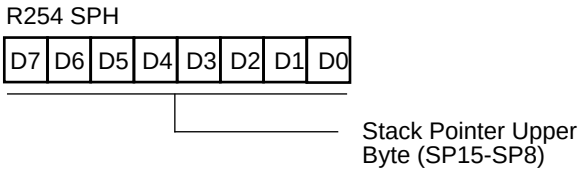

Figure 55. Stack Pointer High ((0) FEH: Read/Write)

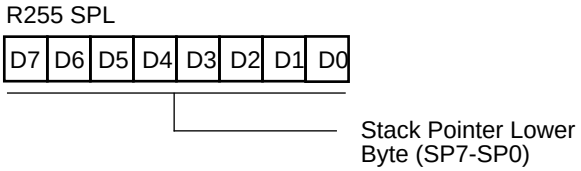

Figure 56. Stack Pointer Low ((0) FFH: Read/Write)

PACKAGE INFORMATION

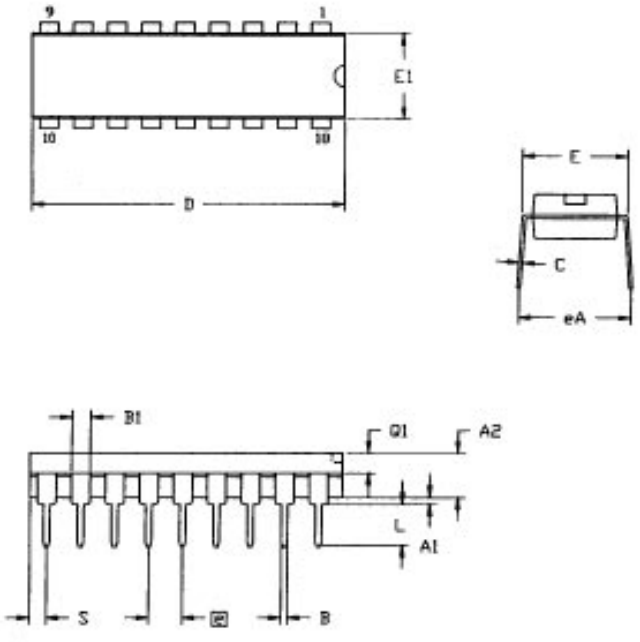

SYMBOL	MILLIMETER		INCH	
	MIN	MAX	MIN	MAX
A1	0.51	0.81	.020	.032
A2	3.25	3.43	.128	.135
B	0.38	0.53	.015	.021
B1	1.14	1.65	.045	.065
C	0.23	0.38	.009	.015
D	22.35	23.37	.880	.920
E	7.62	8.13	.300	.320
E1	6.22	6.48	.245	.255
e	2.54 TYP		.100 TYP	
eA	7.87	8.89	.310	.350
L	3.18	3.81	.125	.150
Q1	1.52	1.65	.060	.065
S	0.89	1.65	.035	.065

CONTROLLING DIMENSIONS : INCH

Figure 57. 18-Pin DIP Pin Assignments

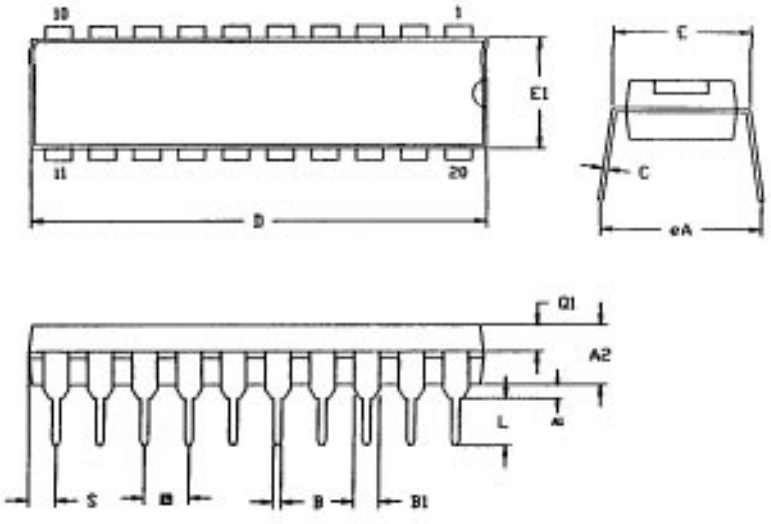

SYMBOL	MILLIMETER		INCH	
	MIN	MAX	MIN	MAX
A1	0.38	-	.015	-
A2	3.25	3.68	.128	.145
B	0.41	0.51	.016	.020
B1	1.47	1.57	.058	.062
C	0.20	0.30	.008	.012
D	25.65	26.16	1.010	1.030
E	7.49	8.26	.295	.325
E1	6.10	6.65	.240	.262
e	2.54 TYP		.100 TYP	
eA	7.87	8.89	.310	.350
L	3.18	3.43	.125	.135
Q1	1.42	1.65	.056	.065
S	1.52	1.65	.060	.065

CONTROLLING DIMENSIONS : INCH

Figure 58. 20-Pin DIP Pin Assignments

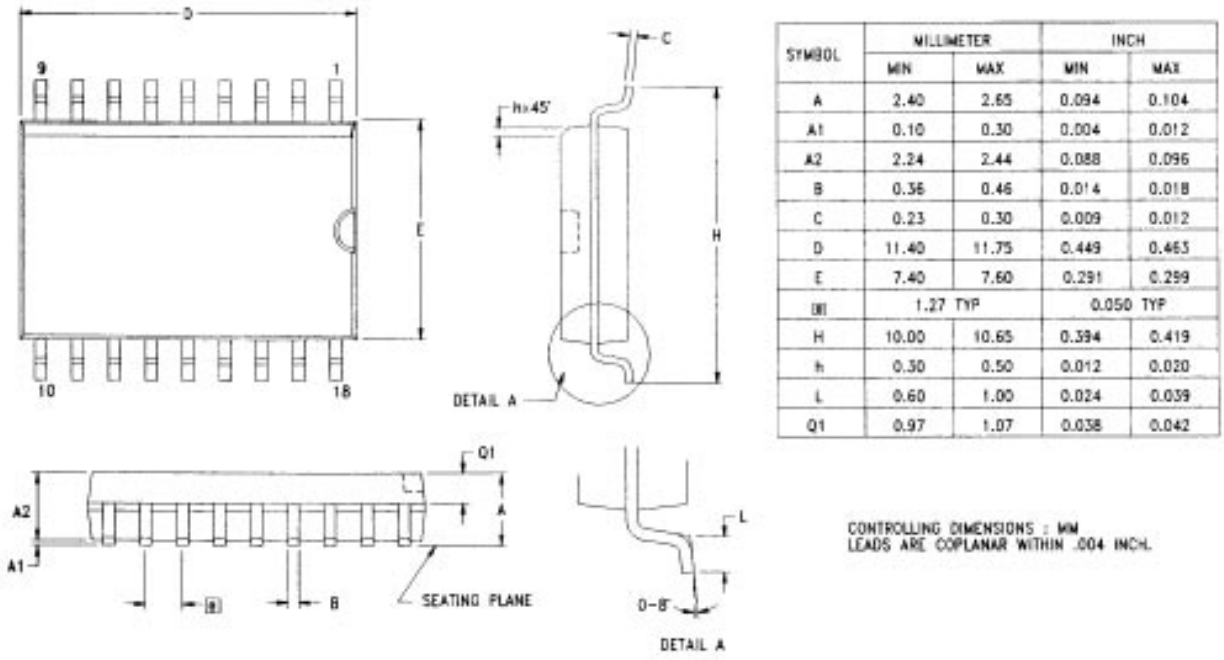

SYMBOL	MILLIMETER		INCH	
	MIN	MAX	MIN	MAX
A	2.40	2.65	0.094	0.104
A1	0.10	0.30	0.004	0.012
A2	2.24	2.44	0.088	0.096
B	0.36	0.46	0.014	0.018
C	0.23	0.30	0.009	0.012
D	11.40	11.75	0.449	0.463
E	7.40	7.60	0.291	0.299
[e]	1.27 TYP		0.050 TYP	
H	10.00	10.65	0.394	0.419
h	0.30	0.50	0.012	0.020
L	0.60	1.00	0.024	0.039
Q1	0.97	1.07	0.038	0.042

Figure 59. 18-Pin SOIC Pin Assignments

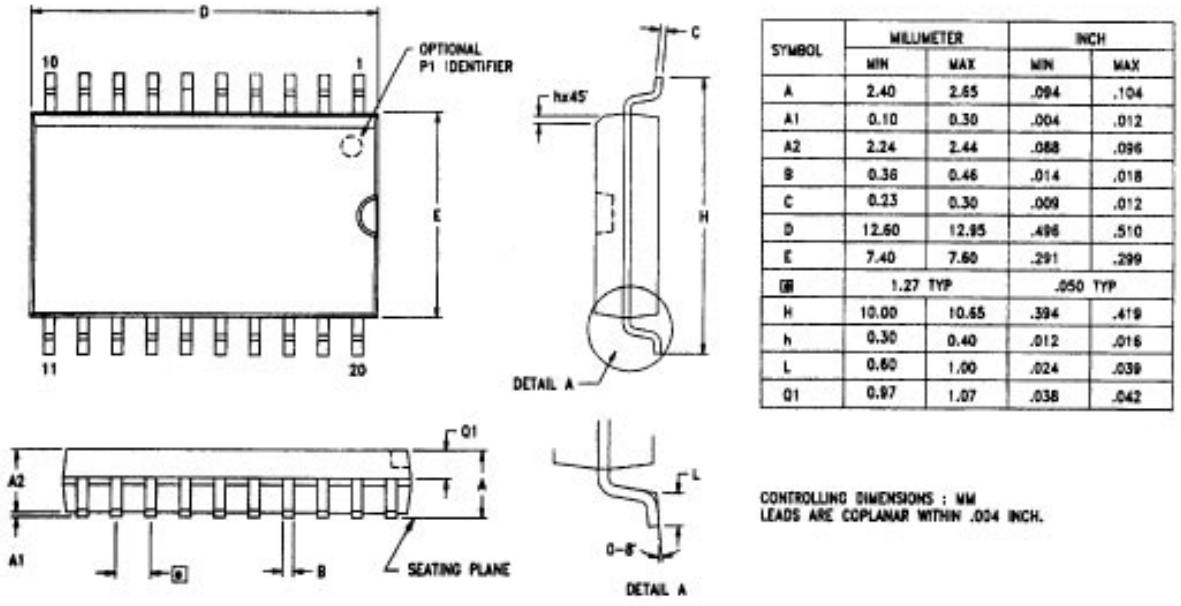

SYMBOL	MILLIMETER		INCH	
	MIN	MAX	MIN	MAX
A	2.40	2.65	.094	.104
A1	0.10	0.30	.004	.012
A2	2.24	2.44	.088	.096
B	0.36	0.46	.014	.018
C	0.23	0.30	.009	.012
D	12.60	12.85	.496	.510
E	7.40	7.60	.291	.299
[e]	1.27 TYP		.050 TYP	
H	10.00	10.65	.394	.419
h	0.30	0.40	.012	.016
L	0.60	1.00	.024	.039
Q1	0.97	1.07	.038	.042

Figure 60. 20-Pin SOIC Pin Assignments

ORDERING INFORMATION

Z86L70/71/75/C71

8.0 MHz

18-pin DIP	**20-pin DIP**
Z86L7008PSC	Z86L7108PSC
Z86L7508PSC	
18-pin SOIC	**20-pin SOIC**
Z86L7008SSC	Z86L7108SSC
Z86L7508SSC	

16.0 MHz

20-pin DIP

Z86C7116PSC

Codes

Package

P = Plastic DIP
S = SOIC (Small Outline Chip Carrier)

Temperature

Standard = 0 °C to +70 °C

Environmental

C = Plastic Standard

Example:

Z 86L71 08 P S C is a Z86L71, 8 MHz, DIP, 0°C to +70°C, Plastic Standard Flow

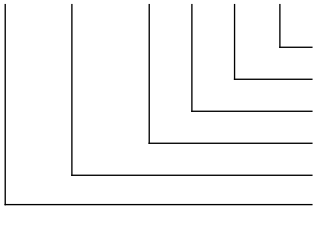

© 1997 by Zilog, Inc. All rights reserved. No part of this document may be copied or reproduced in any form or by any means without the prior written consent of Zilog, Inc. The information in this document is subject to change without notice. Devices sold by Zilog, Inc. are covered by warranty and patent indemnification provisions appearing in Zilog, Inc. Terms and Conditions of Sale only. Zilog, Inc. makes no warranty, express, statutory, implied or by description, regarding the information set forth herein or regarding the freedom of the described devices from intellectual property infringement. Zilog, Inc. makes no warranty of merchantability or fitness for any purpose. Zilog, Inc. shall not be responsible for any errors that may appear in this document. Zilog, Inc. makes no commitment to update or keep current the information contained in this document.

Zilog's products are not authorized for use as critical components in life support devices or systems unless a specific written agreement pertaining to such intended use is executed between the customer and Zilog prior to use. Life support devices or systems are those which are intended for surgical implantation into the body, or which sustains life whose failure to perform, when properly used in accordance with instructions for use provided in the labeling, can be reasonably expected to result in significant injury to the user.

Zilog, Inc. 210 East Hacienda Ave.
Campbell, CA 95008-6600
Telephone (408) 370-8000
FAX 408 370-8056
Internet: http://www.zilog.com