Customer Information Sheet

DRAWING No.: Z80-295 2 OF 2	IF IN DOUBT - ASK	©	NOT TO SCALE	THIRD ANGLE PROJECTION	ALL DIMENSIONS IN mm

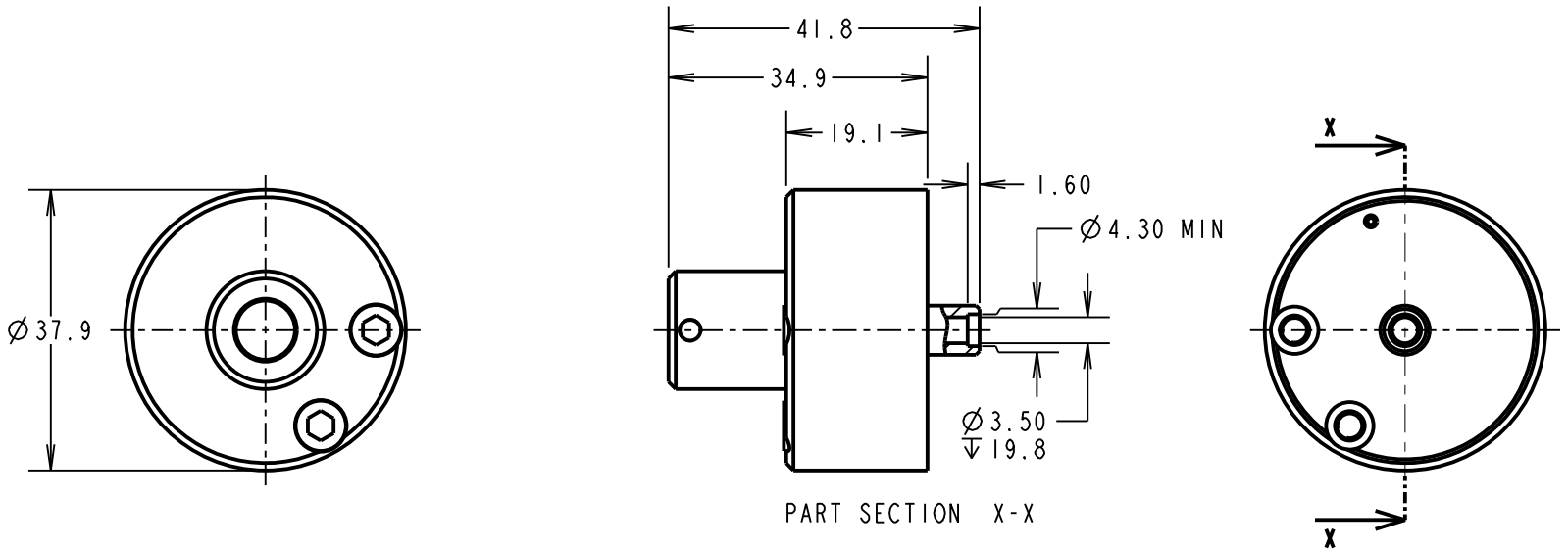

PART SECTION X-X

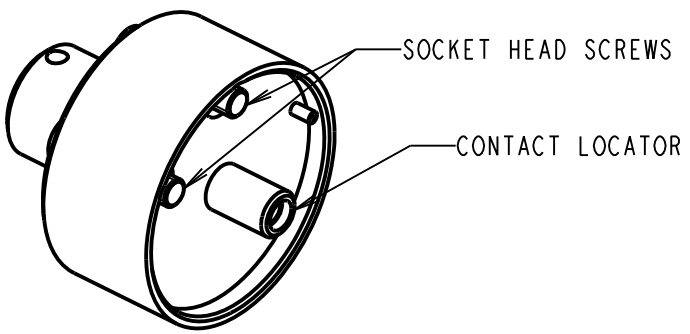

NOTES;
1. USE WITH HAND CRIMP TOOL Z80-294 (M22520/1-01) SEE INSTRUCTION SHEET IS-29.

NAME	ISS.	DATE	C/NOTE
SM	3	15.12.10	11057
APPROVED: S. MCCULLAGH			
CHECKED: R. ADDE			
DRAWN: MARK G PLESTED			
CUSTOMER REF.:			
ASSEMBLY DRG:			

HARWIN

HARWIN USA
TEL: 603 893 5376
FAX: 603 893 5396
mis@harwin.com

HARWIN Europe (UK)
TEL: 023 9231 4545
FAX: 023 9231 4590
mis@harwin.co.uk

HARWIN Asia
TEL: +65 6 779 4909
FAX: +65 6 779 3868
mis@harwin.com.sg

THIS DRAWING AND ANY INFORMATION OR DESCRIPTIVE MATTER SET OUT HEREON ARE CONFIDENTIAL AND COPYRIGHT PROPERTY OF THE HARWIN GROUP AND MUST NOT BE DISCLOSED, LOANED, COPIED OR USED FOR MANUFACTURING, TENDERING OR FOR ANY OTHER PURPOSE WITHOUT THEIR WRITTEN PERMISSION.

TOLERANCES
X. = ±1mm
X.X = ±0.25mm
X.XX = ±0.10mm
X.XXX = ±0.01mm
ANGLES = ±5°
UNLESS STATED

MATERIAL:

FINISH:

S/AREA: mm²

TITLE:
DATAMATE MIX-TEK HAND CRIMP POSITIONER TP1663

DRAWING NUMBER:
Z80-295

SHT 2 OF 2