Z2APK315H

FEATURES

* Halogen-free type
* Compliance to RoHS product
* Lead less chip form, no lead damage
* Low power loss, High efficiency
* High current capability, low VF
* High current capability, low VF
* Plastic package has Underwriters Laboratory Flammability Classification 94V-0
* Patented ZPAK™ Package Technology

APPLICATION

* Switching mode power supply applications
* Portable equipment battery applications
* High frequency rectification
* DC / DC Converter
* Telecommunication

MECHANICAL DATA

Case : Packed with FRP substrate and epoxy underfilled
Terminals : Pure Tin plated (Lead-Free), solderable per MIL-STD-750, Method 2026.
Polarity : Laser Cathode band marking
Weight : 0.027 gram

PACKING

* **3,000 pieces per 7" (178mm ± 2mm) reel**
* **4 reels per box**
* **6 boxes per carton**

OUTLINE DIMENSIONS

Case : Z2APAK

Unit : mm

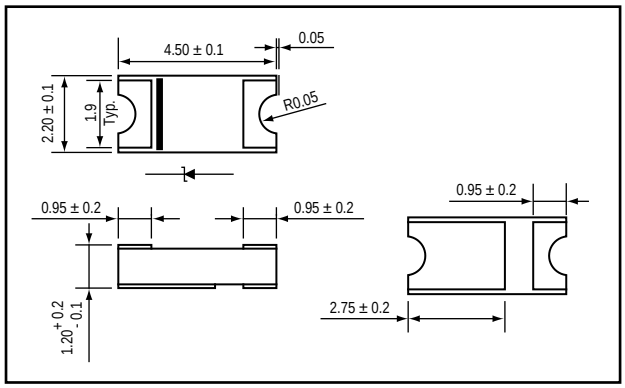

MARKING

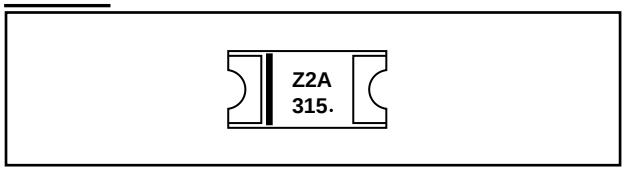

MOUNTING PAD LAYOUT

Unit : mm

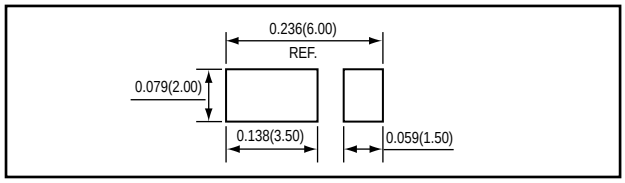

Absolute Maximum Ratings (Ta = 25 °C)

ITEM	Symbol	Conditions	Rating	Unit
Repetitive peak reverse voltage	V_{RRM}		150	V
Average forward current	$I_{F(AV)}$		3.0	A
Peak forward surge current	I_{FSM}	8.3ms single half sine-wave	80	A
Operating junction temperature Range	T_j		-55 to +150	°C
Storage temperature Range	T_{STG}		-55 to +150	°C

Electrical characteristics (Ta = 25 °C)

ITEM	Symbol	Conditions	Min.	Typ.	Max.	Unit
Forward voltage (NOTE 1)	V_F	I_F = 3.0A	-	0.83	0.88	V
Repetitive peak reverse current (NOTE 1)	I_{RRM}	V_R = Max. V_{RRM} , Ta = 25 °C	-	1.0	50	uA
Thermal resistance	$R_{th(JA)}$	Junction to ambient (NOTE 2)	-	97	-	°C / W
	$R_{th(JC)}$	Junction to case (NOTE 2)	-	14	-	°C / W

NOTES : (1) Pulse test width PW=300usec , 1% duty cycle.
(2) Mounted on P.C. board with 2.0 x 2.0mm) copper pad areas.

FIG.1 - FORWARD CURRENT DERATING CURVE

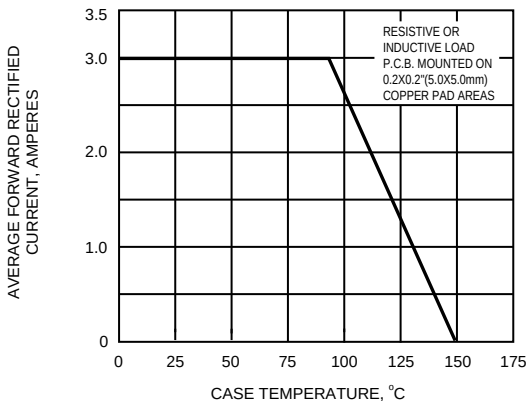

FIG.2 - MAXIMUM NON-REPETITIVE PEAK FORWARD SURGE CURRENT

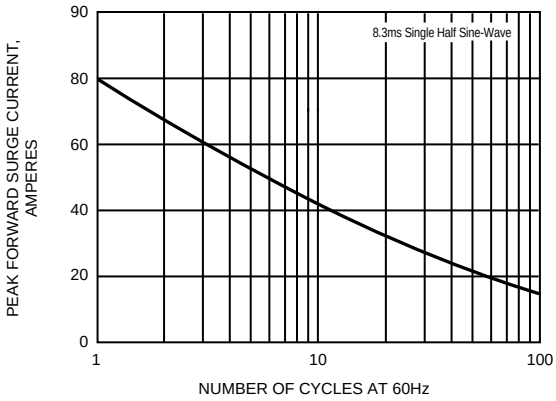

FIG.3 - TYPICAL INSTANTANEOUS FORWARD CHARACTERISTICS

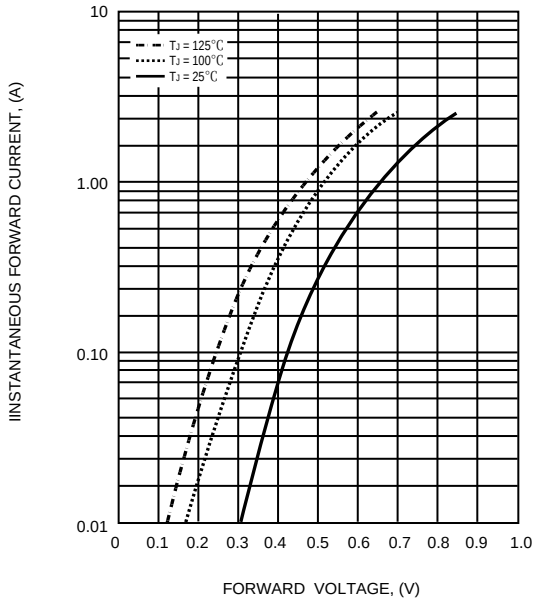

FIG.4 - TYPICAL REVERSE CHARACTERISTICS

