KEMET Part Number: Z0805C750ASMST

KEMET, Z-SMS, Ferrite Beads, Noise Suppression, 100 mOhms

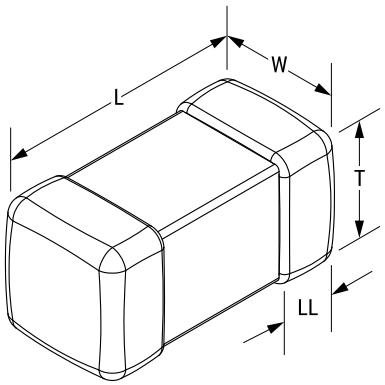

General Information	
Series:	Z-SMS
Style:	SMD Chip
Description:	Chip Bead Signal Line
Features:	Suppresses The XL Component; Helps Stop The Reduction Of The Wave-Form Integrity
RoHS:	Yes
Notes:	Internal Silver Printed Layer Creates A Closed Circuit Which Acts As A Magnetic Shield To Minimize Heat Generation And Crosstalk

Dimensions	
Chip Size	0805
L	2mm +0.3/-0.1mm
W	1.25mm +/-0.2mm
T	0.85mm +/-0.2mm
B	0.5mm +/-0.3mm

Specifications	
Impedance:	75 Ohms (100 mHz)
Impedance Tolerance:	25%
Ripple Current:	1000 mA (MAX)
Temperature Range:	-55/+125°C
Resistance:	0.1 Ohms

Packaging Specifications	
Packaging:	T&R
Packaging Quantity:	4000

Statements of suitability for certain applications are based on our knowledge of typical operating conditions for such applications, but are not intended to constitute - and we specifically disclaim - any warranty concerning suitability for a specific customer application or use. This Information is intended for use only by customers who have the requisite experience and capability to determine the correct products for their application. Any technical advice inferred from this Information or otherwise provided by us with reference to the use of our products is given gratis, and we assume no obligation or liability for the advice given or results obtained.

© 2006 - 2020 KEMET