Z04 Series 4A TRICs

DESCRIPTION:

The Z04 series is suitable for general purpose AC switching applications. They can be found in applications such as touch light dimmers, fan controllers, HID lamp ignitors,...

Different gate current sensitivities are available, allowing optimized performances when controlleddirectly from microcontrollers.

TO-251(IPAK)

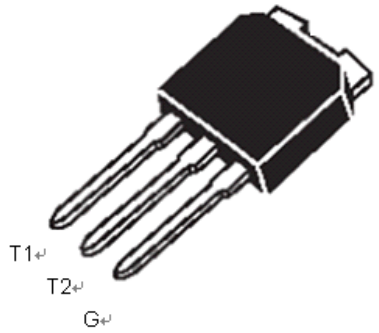

TO-202-3

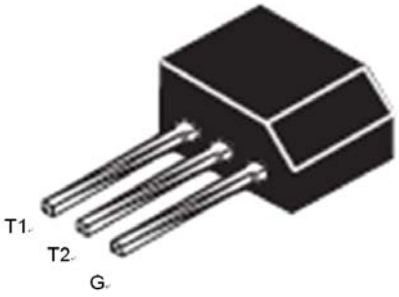

MAIN FEATURES

Symbol	Value	Unit
$I_{T(RMS)}$	4	A
V_{DRM}/V_{RRM}	600	V
I_{GT}	5-25	mA

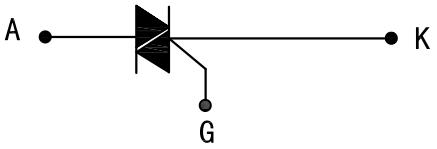

ABSOLUTE MAXIMUM RATINGS

Parameter		Symbol	Value	Unit
Storage junction temperature range Operrating junction temperature range		Tstg Tj	- 40 to +150 - 40 to +125	℃
Repetitive Peak Off-state Voltage Repetitive Peak Reverse Voltage	Tj=25℃	V_{DRM} V_{RRM}	600 600	V
RMS on-state current (180°conduction angle)	Tl=30℃	$I_{T(RMS)}$	4	A
Non repetitive surge peak on-state current (full cycle Tj initial=25℃)	tp=20ms	I_{TSM}	20	A
	tp=16.7ms		21	
I^2t Value for fusing	tp=10ms	I^2t	2.2	A^2s
Critical rate of rise of on-state current $I_G=2\times I_{GT}$, tr≤100 ns, f=120Hz, Tj=125℃		dI /dt	20	A/us
Peak gate current tp=20us, Tj=125℃		I_{GM}	1.2	A
Average gate power dissipation Tj=125℃		$P_{G(AV)}$	0.2	W

ELECTRICAL CHARACTERISTICS(Tj=25℃ unless otherwise specified)

Symbol	Test Condition	Quadrant		Z04××			Unit
				05	09	10	
I_{GT}	V_D=12V R_L=33Ω	ALL	Max.	5	10	25	mA
V_{GT}	V_D=12V R_L=33Ω	ALL	Max.	1.3			V
V_{GD}	V_D=V_{DRM} R_L=3.3KΩ Tj =125℃	ALL	Min.	0.2			V
I_L	I_G=1.2 I_{GT}	I - II - III	Max.	10	15	25	mA
		IV		15	25	35	
I_H	I_T =50mA		Max.	5	10	25	mA
V_{TM}	I_T = 5.5A tp=380uS	Tj=25 ℃	Max.	2.0			V
dV/dt	V_D=67%V_{DRM} Gate open	Tj=110 ℃	Min.	20	100	200	V/μs
(dV/dt)c	(dI/dt)c=1.8A/ms	Tj=110 ℃	Min.	1	2	5	V/μs
I_{DRM} I_{RRM}	V_D= V_{DRM} V_R = V_{RRM}	Tj=25 ℃	Max.	5			uA
		Tj=125 ℃		0.5			mA

THERMAL RESISTANCES

Symbol	Parameter	Value	Unit
$R_{th(J-L)}$	Junction to lead(AC)	15	℃/W

ORDERING INFORMATION

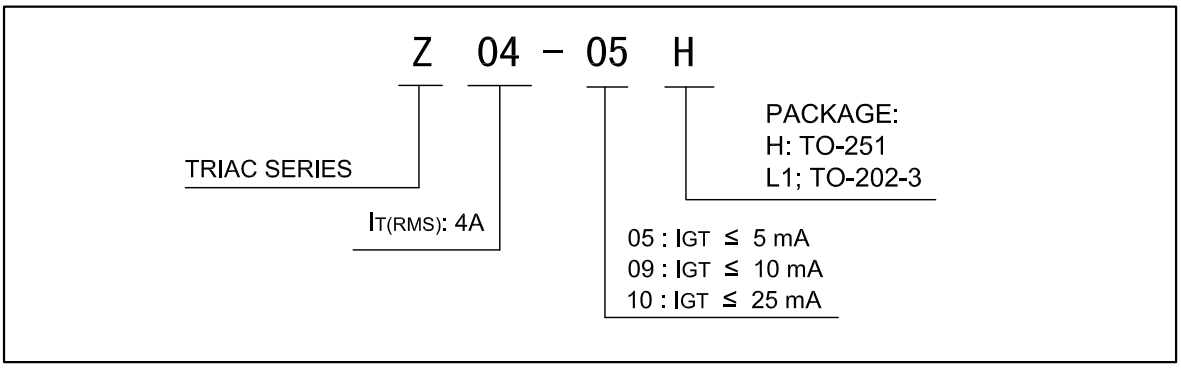

PACKAGE MECHANICAL DATA

TO-202-3

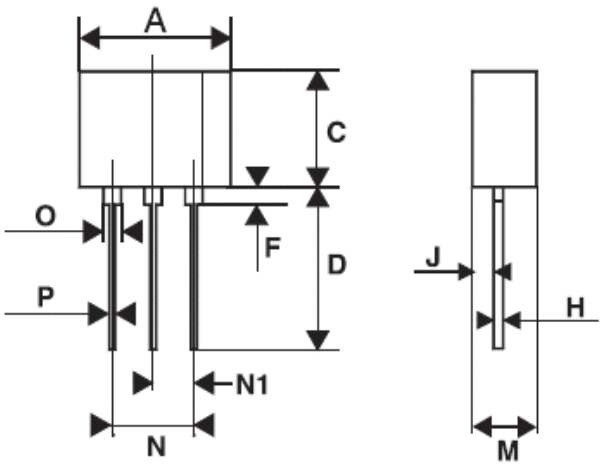

REF.	DIMENSIONS					
	Millimeters			Inches		
	Min.	Typ.	Max.	Min.	Typ.	Max.
A			10.1			0.398
C		7.3			0.287	
D		10.5			0.413	
F			1.5			0.059
H		0.51			0.020	
J		1.5			0.059	
M		4.5			0.177	
N			5.3			0.209
N1		2.54			0.100	
O			1.4			0.055
P			0.7			0.028

TO-251(IPAK)

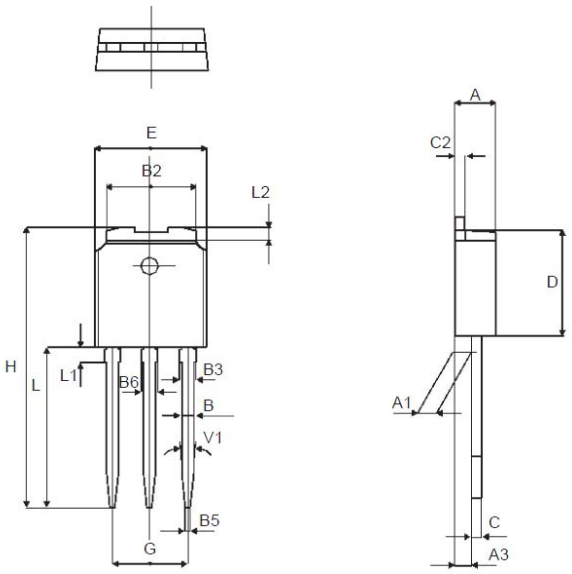

REF.	DIMENSIONS					
	Millimeters			Inches		
	Min.	Typ.	Max.	Min.	Typ.	Max.
A	2.2		2.4	0.086		0.094
A1	0.9		1.1	0.035		0.043
A3	0.7		1.3	0.027		0.051
B	0.64		0.9	0.025		0.035
B2	5.2		5.4	0.204		0.212
B3			0.85			0.033
B5		0.3			0.035	
B6			0.95			0.037
C	0.45		0.6	0.017		0.023
C2	0.48		0.6	0.019		0.023
D	6		6.2	0.236		0.244
E	6.4		6.6	0.252		0.260
G	4.4		4.6	0.173		0.181
H	15.9		16.3	0.626		0.641
L	9		9.4	0.354		0.370
L1	0.8		1.2	0.031		0.047
L2		0.8	1		0.031	0.039
V1		10°			10°	

Fig. 1: Maximum average power dissipation versus average on-state current.

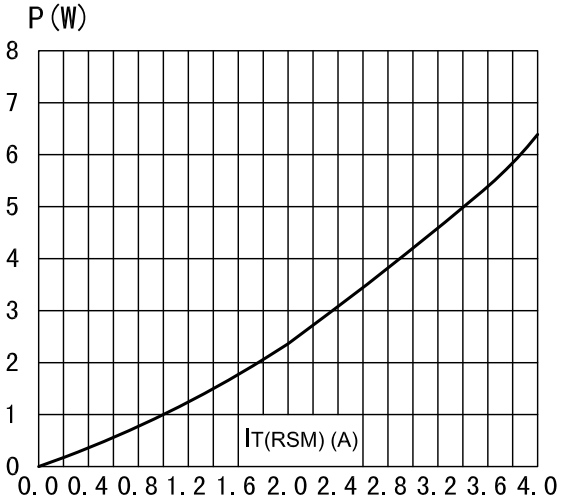

Fig. 2: RMS on-state current versus ambient temperature(full cycle).

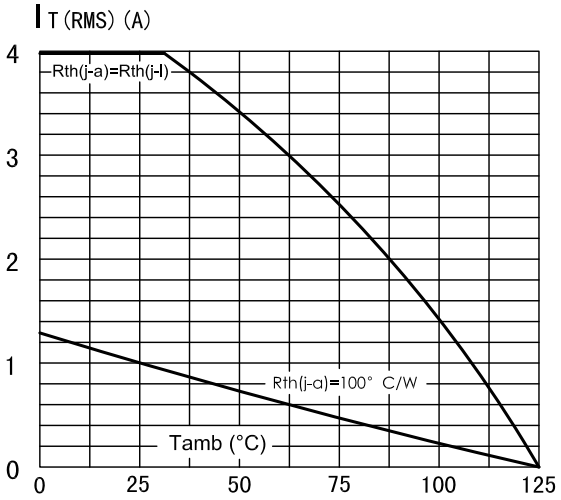

Fig. 3: Surge peak on-state current versus number of cycles.

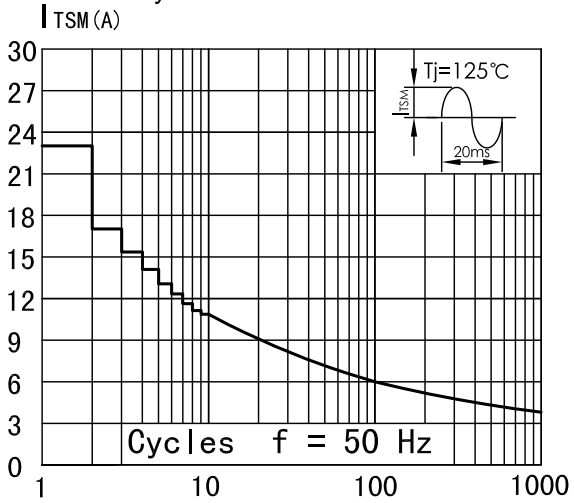

Fig. 4: On-state characteristics (maximum values).

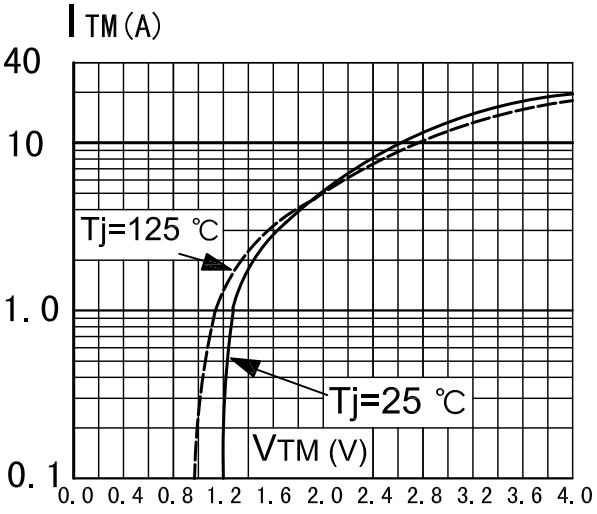

Fig. 5: Relative variation of gate trigger current, holding current and latching current versus junction temperature (typical values).

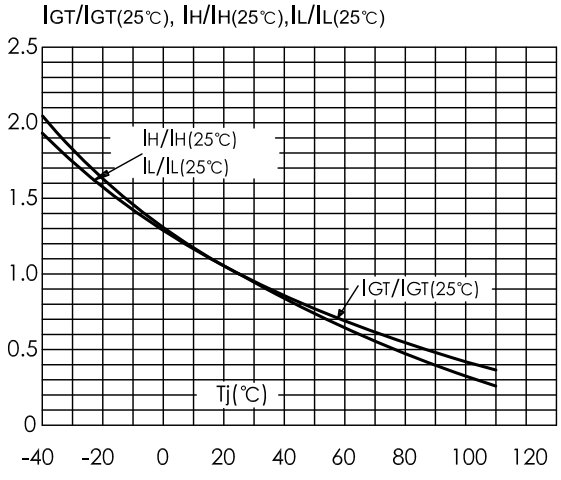

Fig. 6: Non-repetitive surge peak on-state current for a sinusoidal pulse with width tp < 10ms, and corresponding value of I²t.

