YN Series Voltage Controlled Crystal Oscillator (VCXO)
Legacy ST1317 Series
7.0 x 5.0mm

3.3V CMOS Ultra Low Jitter VCXO

YN



7.0 x 5.0mm Ceramic SMD

Product Features

- 32 - 125MHz Frequency Range
- Cost-effective design
- Commercial and industrial operation
- ±50 ppm stability (or as specified)
- ±50 to ±100 ppm absolute (net) pull range
- RoHS Compliant

Product Description

The YN is a voltage controlled crystal oscillator with wide pullability over a broad range of operating conditions and frequencies. The device is constructed with a hermetically sealed, quartz crystal resonator and low noise clock IC. The device, available on tape and reel, is contained in a 7.0 x 5.0mm ceramic package.

Applications

The YN Series VCXO is an ideal component in phase locked loop circuits that perform clock smoothing, clock/data recovery, or frequency translation and card synchronization functions, such as:

- SD/HD Video decoding
- SONET/SDH timing control and line cards
- T3/E3 Platforms
- Satellite and microwave communications
- Wireless base stations
- xDSL and DSLAM
- VoIP

Package:

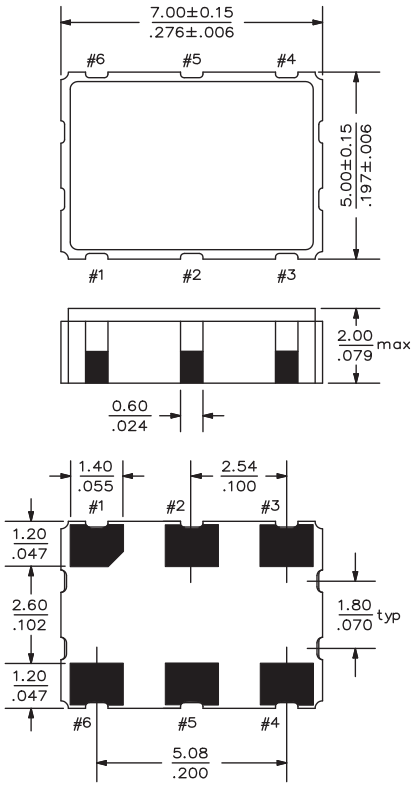

Recommended Land Pattern:

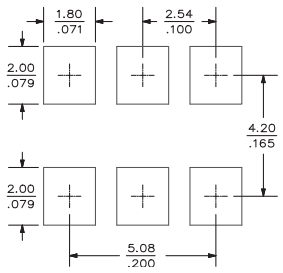

Pin Functions:

Pin	Function
1	Voltage Control
2	OE or NC
3	V_{EE}
4	Output
5	NC
6	V_{CC}

Part Ordering Information:

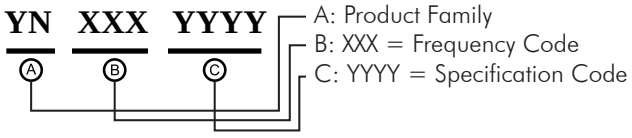

Following the above format, Saronix-eCera part numbers will be assigned upon confirmation of exact customer requirements.

Legacy Ordering Information - For Reference Only:

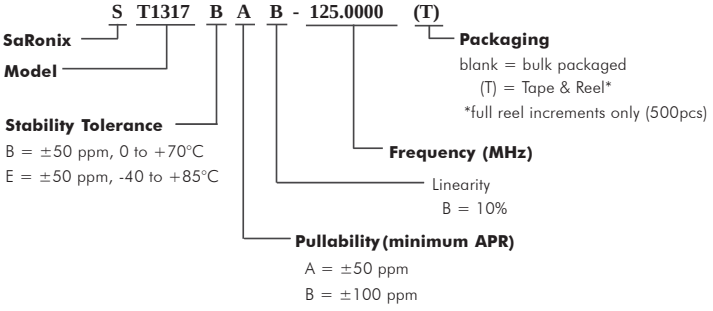

YN Series Voltage Controlled Crystal Oscillator (VCXO)
Legacy ST1317 Series | 7.0 x 5.0mm

Electrical Performance

Parameter	Min.	Typ.	Max.	Units	Notes
Output Frequency (F_N)	32.0		125.0	MHz	As specified
Supply Voltage	+2.97	+3.3	+3.63	V	
Supply Current			35	mA	
Frequency Stability			±50	ppm	See #1 and #2 below
Operating Temperature Range	-40		+85	°C	As specified
Output Logic 0, V_{OL}			10% V_{DD}	V	Capacitive load
			20% V_{DD}	V	AC coupled load
Output logic 1, V_{OH}	90% V_{DD}			V	Capacitive load
	80% V_{DD}			V	AC coupled load
Output Load			30	pF	Up to 80 MHz
			95	Ω AC	Up to 125 MHz
Duty Cycle	45		55	%	measured 50% V_{DD} (0 to +70°C)
	40		60	%	measured 50% V_{DD} (-40 to +85°C)
Rise and Fall Time			4	ns	measured 20/80% V_{DD}
Jitter, Total			100	ps pk-pk	
			20	ps RMS	
Phase Noise		-95		dBc/Hz	100 Hz offset
		-110		dBc/Hz	1 kHz offset
		-100		dBc/Hz	10 kHz offset

Notes:
1. Stability includes all combinations of operating temperature, load changes, rated input (supply) voltage changes, initial calibration tolerance (25°C), aging (5 year at 40°C average effective ambient temperature), shock and vibration.
2. For specifications othere than those listed, please contact sales.

Frequency Modulation Function

Parameter	Min.	Typ.	Max.	Units	Notes
Absolute Pull Range (APR)	±50 to ±100			ppm	See #1 below
Control Voltage Range	+0.3		+3.0	V_{DC}	As rated
Center Control Voltage		+1.65		V	For RMT center frequency
Monotonic Linearity			10	%	Positive transfer slope
Input Impedance	50			kΩ	Control voltage pin
Modulation Bandwidth	50			kHz	-3dB

Notes:
1. As specified. APR is relative to the nominal output frequency FN; APR is inclusive (net) of frequency deviation due to stability.

Output Enable / Disable Function

Parameter	Min.	Typ.	Max.	Units	Notes
Input Voltage, Output Enable	3.0			V	or open
Input Voltage, Output High Impedance			0.3	V	Output is high impendance

Absolute Maximum Ratings

Parameter	Min.	Typ.	Max.	Units	Notes
Storage Temperature	-55		+125	°C	

Test Circuit

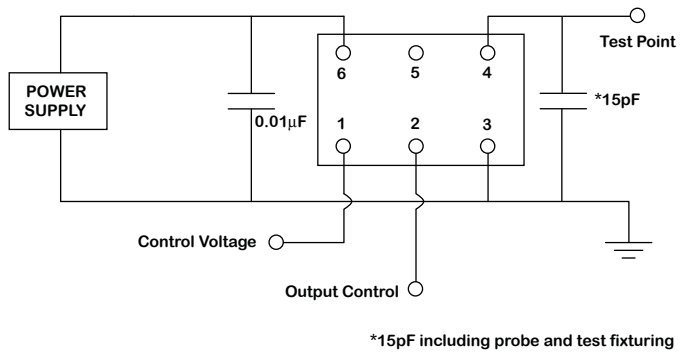

Reflow Soldering Profile

As per IPC/JEDEC J-STD-020C

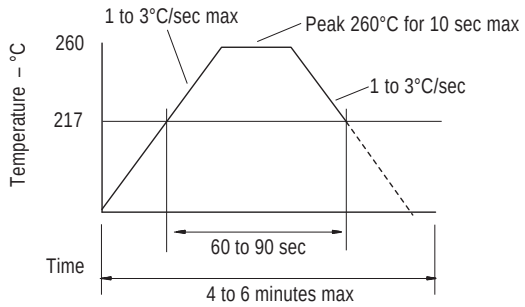

Reliability Test Ratings

This product is rated to meet the following test conditions:

Type	Parameter	Test Condition
Mechanical	Shock	MIL-STD-883, Method 2002, Condition B
Mechanical	Solderability	JESD22-B102-D Method 2 (Preconditioning E)
Mechanical	Terminal strength	MIL-STD-883, Method 2004, Condition D
Mechanical	Gross leak	MIL-STD-883, Method 1014, Condition C
Mechanical	Fine leak	MIL-STD-883, Method 1014, Condition A2 ($R_1 = 2x10^{-8}$ atm cc/s)
Mechanical	Solvent resistance	MIL-STD-202, Method 215
Environmental	Thermal shock	MIL-STD-883, Method 1011, Condition A
Environmental	Moisture resistance	MIL-STD-883, Method 1004
Environmental	Vibration	MIL-STD-883, Method 2007, Condition A
Environmental	Resistance to soldering heat	J-STD-020C Table 5-2 Pb-free devices (2 cycles max)

Output Waveform

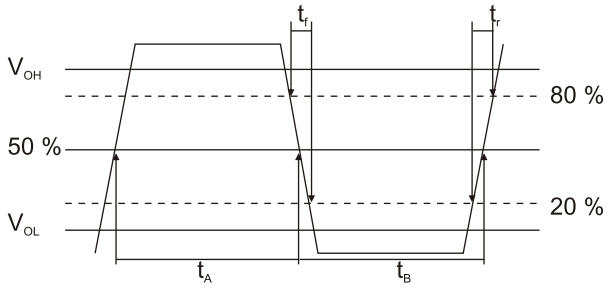

Duty cycle = 100% x (t_A) / (t_A + t_B)

Mechanical Drawing

