

SBOS146A − OCTOBER 1986 − REVISED AUGUST 2004

Precision, Low Drift 4-20mA TWO-WIRE TRANSMITTER

FEATURES

- **INSTRUMENTATION AMPLIFIER INPUT:**
  - **Low Offset Voltage, 30μV max**
  - **Low Voltage Drift, 0.75μV/°C max**
  - **Low Nonlinearity, 0.01% max**
- **TRUE TWO-WIRE OPERATION:**
  - **Power and Signal on One Wire Pair**
  - **Current Mode Signal Transmission**
  - **High Noise Immunity**
- **DUAL MATCHED CURRENT SOURCES**
- **WIDE SUPPLY RANGE: 11.6V to 40V**
- **SPECIFICATION RANGE: −40°C to +85°C**
- **SMALL DIP-14 PACKAGE, CERAMIC AND PLASTIC**

APPLICATIONS

- **INDUSTRIAL PROCESS CONTROL:**
  - **Pressure Transmitters**
  - **Temperature Transmitters**
  - **Millivolt Transmitters**
- **RESISTANCE BRIDGE INPUTS**
- **THERMOCOUPLE INPUTS**
- **RTD INPUTS**
- **CURRENT SHUNT (mV) INPUTS**
- **PRECISION DUAL CURRENT SOURCES**
- **AUTOMATED MANUFACTURING**
- **POWER/PLANT ENERGY SYSTEM MONITORING**

DESCRIPTION

The XTR101 is a microcircuit, 4-20mA, two-wire transmitter containing a high accuracy instrumentation amplifier (IA), a voltage-controlled output current source, and dual-matched precision current reference. This combination is ideally suited for remote signal conditioning of a wide variety of transducers such as thermocouples, RTDs, thermistors, and strain gauge bridges. State-of-the-art design and laser-trimming, wide temperature range operation, and small size make it very suitable for industrial process control applications. In addition, the optional external transistor allows even higher precision.

The two-wire transmitter allows signal and power to be supplied on a single wire pair by modulating the power-supply current with the input signal source. The transmitter is immune to voltage drops from long runs and noise from motors, relays, actuators, switches, transformers, and industrial equipment. It can be used by OEMs producing transmitter modules or by data acquisition system manufacturers.

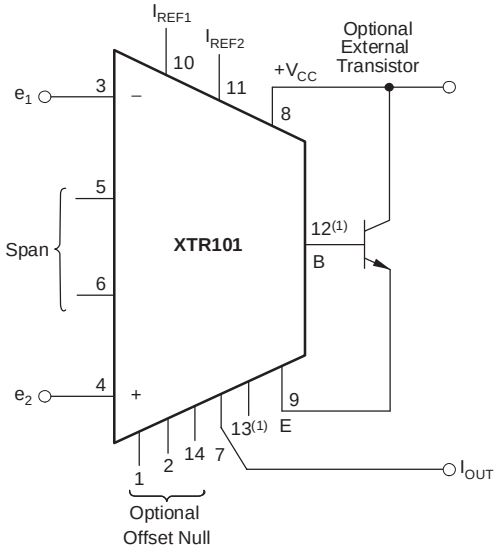

NOTE: (1) Pins 12 and 13 are used for optional BW control.

Please be aware that an important notice concerning availability, standard warranty, and use in critical applications of Texas Instruments semiconductor products and disclaimers thereto appears at the end of this data sheet.

All trademarks are the property of their respective owners.

PRODUCTION DATA information is current as of publication date. Products conform to specifications per the terms of Texas Instruments standard warranty. Production processing does not necessarily include testing of all parameters.

Copyright © 1986-2004, Texas Instruments Incorporated

ABSOLUTE MAXIMUM RATINGS(1)

Power Supply, $+V_{CC}$	40V
Input Voltage, e_1 or e_2	≥ V_{OUT}, ≤ $+V_{CC}$
Storage Temperature Range, Ceramic	−55°C to +165°C
Plastic	−55°C to +125°C
Lead Temperature (soldering, 10s) G, P	+300°C
(wave soldering, 3s) U	+260°C
Output Short-Circuit Duration	Continuous $+V_{CC}$ to I_{OUT}
Junction Temperature	+165°C

(1) Stresses above these ratings may cause permanent damage. Exposure to absolute maximum conditions for extended periods may degrade device reliability. These are stress ratings only, and functional operation of the device at these or any other conditions beyond those specified is not supported.

This integrated circuit can be damaged by ESD. Texas Instruments recommends that all integrated circuits be handled with appropriate precautions. Failure to observe proper handling and installation procedures can cause damage.

ESD damage can range from subtle performance degradation to complete device failure. Precision integrated circuits may be more susceptible to damage because very small parametric changes could cause the device not to meet its published specifications.

ORDERING INFORMATION

PRODUCT	PACKAGE-LEAD	PACKAGE DESIGNATOR(1)	SPECIFIED TEMPERATURE RANGE	PACKAGE MARKING
XTR101	Ceramic DIP-14	JD	−40°C to +85°C	XTR101AG
				XTR101BG
	Plastic DIP-14	N		XTR101AP
	SO-16	DW		XTR101AU

(1) For the most current package and ordering information, see the Package Option Addendum located at the end of this data sheet.

PIN CONFIGURATION

Top View **DIP**

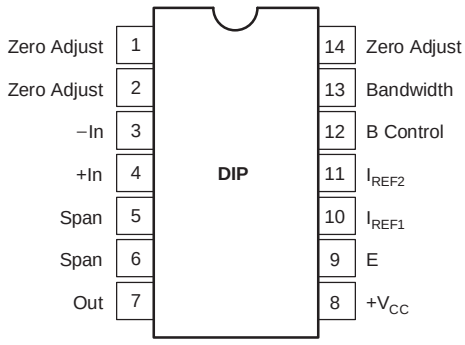

Top View **SO**

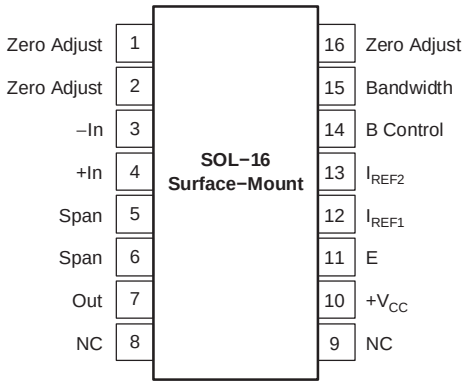

NC = No Connection

ELECTRICAL CHARACTERISTICS

At T_A = +25°C, $+V_{CC}$ = 24VDC, and R_L = 100Ω with external transistor connected, unless otherwise noted.

PARAMETER	CONDITIONS	XTR101AG			XTR101BG			XTR101AP			XTR101AU			UNIT
		MIN	TYP	MAX	MIN	TYP	MAX	MIN	TYP	MAX	MIN	TYP	MAX	
OUTPUT AND LOAD CHARACTERISTICS														
Current	Linear Operating Region	4		20	✻		✻	✻		✻	✻		✻	mA
	Derated Performance	3.8		22	✻		✻	✻		✻	✻		✻	mA
Current Limit			28	38		✻	✻		31	✻		31	✻	mA
Offset Current Error	I_{OS}, I_O = 4mA		±3.9	±10		±2.5	±6		±8.5	±19		±8.5	±19	µA
vs Temperature	$\Delta I_{OS}/\Delta T$		±10.5	±20		±8	±15		±10.5	±20		✻		ppm, FS/°C
Full-Scale Output Current Error	Full-Scale = 20mA		±20	±40		±15	±30		±30	±60		±30	±60	µA
Power-Supply Voltage	V_{CC}, Pins 7 and 8, Compliance(1)	+11.6		±40	✻		✻	✻		✻	✻		✻	VDC
Load Resistance	At V_{CC} = +24V, I_O = 20mA			600			✻			✻			✻	Ω
	At V_{CC} = +40V, I_O = 20mA			1400			✻			✻			✻	Ω
SPAN														
Output Current Equation	R_S in Ω, e_1 and e_2 in V			$I_O = 4mA + \left[0.016amps/volt + \left(40/R_S\right)\right]\left(e_2 - e_1\right)$										
Span Equation	R_S in Ω			$S = \left[0.016amps/volt + \left(40/R_S\right)\right]$										A/V
vs Temperature	Excluding TCR of R_S		±30	±100		✻	✻		✻	✻		✻	✻	ppm/°C
Untrimmed Error(2)	ε_{SPAN}	−5	−2.5	0	✻	✻	✻	✻	✻	✻	✻	✻	✻	%
Nonlinearity	$\varepsilon_{NONLINEARITY}$			0.01			✻			✻			✻	%
Hysteresis			0			✻			✻			✻		%
Dead Band			0			✻			✻			✻		%
INPUT CHARACTERISTICS														
Impedance: Differential			0.4 ||3			✻			✻			✻		GΩ ||pF
Common-Mode			10 ||3			✻			✻			✻		GΩ ||pF
Voltage Range, Full-Scale	$\Delta e = (e_2 - e_1)$(3)	0		1	✻		✻	✻		✻	✻		✻	V
Offset Voltage	V_{OS}		±30	±60		±20	±30		✻	±100		✻	±100	µV
vs Temperature	$\Delta V_{OS}/\Delta T$		±0.75	±1.5		±0.35	±0.75		✻	✻		✻	✻	µV/°C
Power-Supply Rejection	ΔV_{CC}/PSRR = V_{OS} Error	110	125		✻	✻		✻	122		✻	122		dB
Bias Current	I_B		60	150		✻	✻		✻	✻		✻	✻	nA
vs Temperature	$\Delta I_B/\Delta T$		0.30	1		✻	✻		✻	✻		✻	✻	nA/°C
Offset Current	I_{OSI}		10	±30		✻	±20		✻	✻		✻	✻	nA
vs Temperature	$\Delta I_{OSI}/\Delta T$		0.1	0.3		✻	✻		✻	✻		✻	✻	nA/°C
Common-Mode Rejection(4)	DC	90	100		✻	✻		✻	✻		✻	✻		dB
Common-Mode Range	e_1 and e_2 with Respect to Pin 7	4		6	✻		✻	✻		✻	✻		✻	V
CURRENT SOURCES														
Magnitude			1			✻			✻			✻		mA
Accuracy	V_{CC} = 24V, $V_{PIN\ 8} - V_{PIN\ 10,\ 11}$ = 19V, R_2 = 5kΩ, see Figure 5		±0.06	±0.17		±0.025	±0.075		±0.2	±0.37		±0.2	±0.37	%
vs Temperature			±50	±80		±30	±50		✻	✻		✻	✻	ppm/°C
vs V_{CC}			±3			✻			✻			✻		ppm/V
vs Time			±8			✻			✻			✻		ppm/month
Compliance Voltage Ratio Match	With Respect to Pin 7 Tracking	0	V_{CC} − 3.5		✻		✻	✻		✻	✻		✻	V
Accuracy	$(1 - I_{REF1}/I_{REF2}) \times 100\%$		±0.014	±0.06		±0.009	±0.04		±0.031	±0.088		±0.031	±0.088	%
vs Temperature				±15			10			✻			✻	ppm/°C
vs V_{CC}			±10			✻			✻			✻		ppm/V
vs Time			±1			✻			✻			✻		ppm/month
Output Impedance		10	20		✻	✻		✻	15		✻	15		MΩ
TEMPERATURE RANGE														
Specification		−40		+85	✻		✻	✻		✻	✻		✻	°C
Operating		−55		+125	✻		✻	−40		+85	−40		+85	°C
Storage		−55		+165	✻		✻	−55		+125	−55		+125	°C

✻ Same as XTR101AG.

(1) See the Typical Characteristics.

(2) Span error shown is untrimmed and may be adjusted to zero.

(3) e_1 and e_2 are signals on the −In and +In terminals with respect to the output, pin 7. While the maximum permissible Δe is 1V, it is primarily intended for much lower signal levels, for instance, 10mV or 50mV full-scale for the XTR101A and XTR101B grades, respectively. 2mV FS is also possible with the B grade, but accuracy will degrade due to possible errors in the low value span resistance and very high amplification of offset, drift, and noise.

(4) Offset voltage is trimmed with the application of a 5V common-mode voltage. Thus, the associated common-mode error is removed. See the *Application Information* section.

TYPICAL CHARACTERISTICS

At T_A = +25°C and V_{CC} = 24VDC, unless otherwise noted.

SPAN vs FREQUENCY

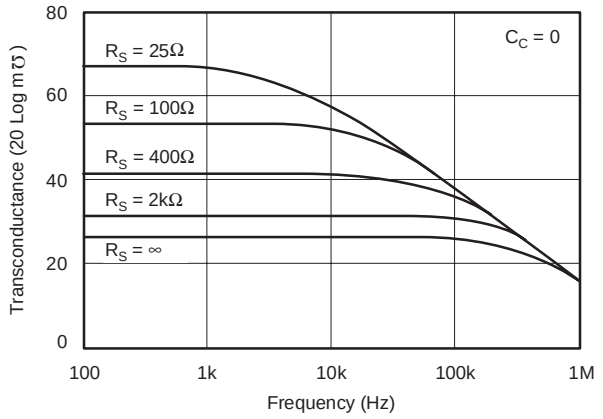

STEP RESPONSE

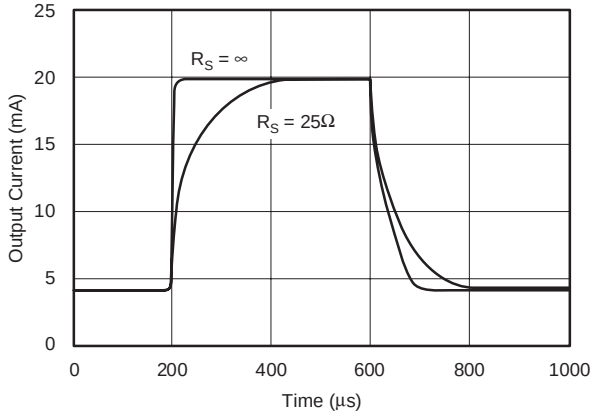

FULL−SCALE INPUT VOLTAGE vs R_S

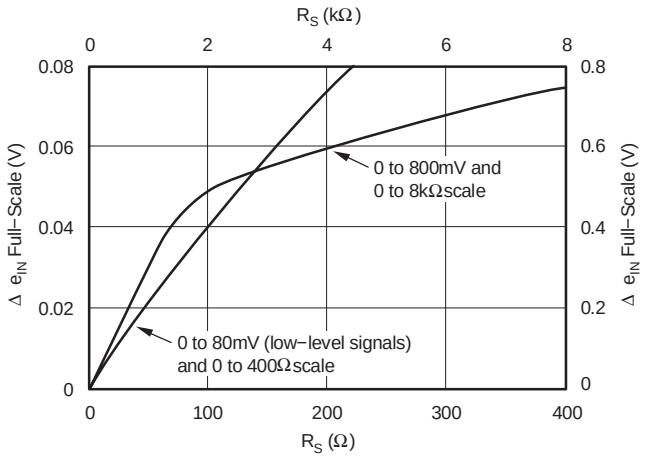

COMMON−MODE REJECTION vs FREQUENCY

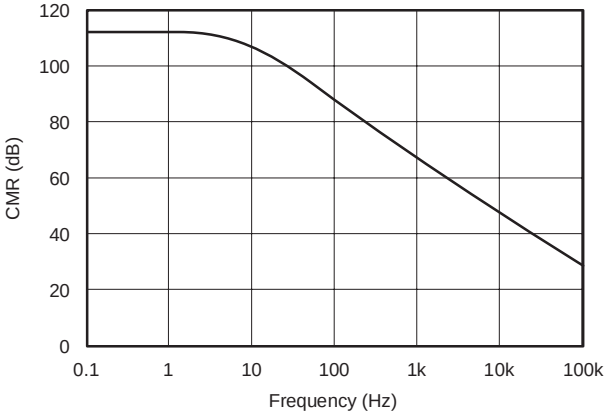

POWER−SUPPLY REJECTION vs FREQUENCY

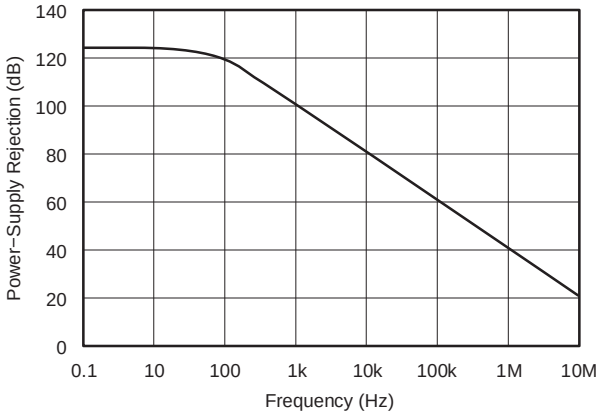

BANDWIDTH vs PHASE COMPENSATION

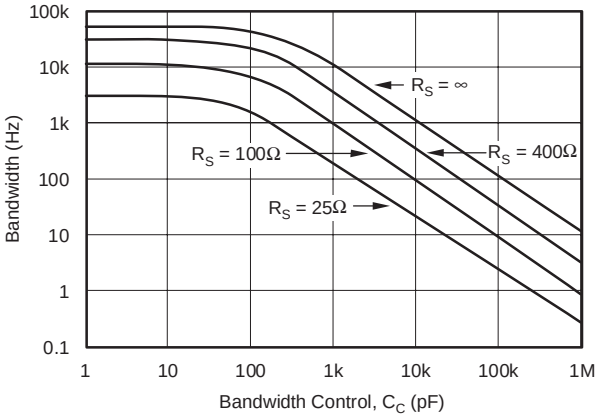

TYPICAL CHARACTERISTICS (continued)

At T_A = +25°C, V_{DD} = +3.3V, and V_{IO} = +3.3V, unless otherwise noted.

INPUT VOLTAGE NOISE DENSITY vs FREQUENCY

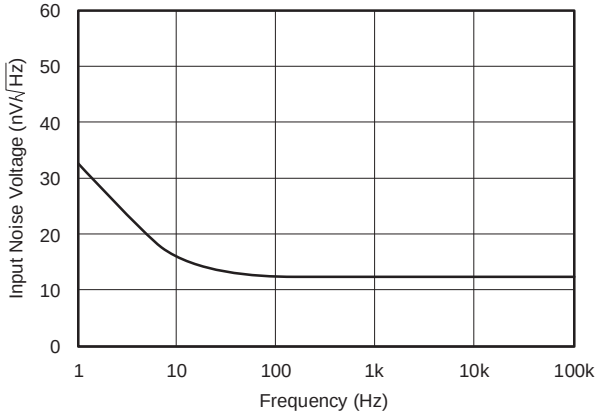

INPUT CURRENT NOISE DENSITY vs FREQUENCY

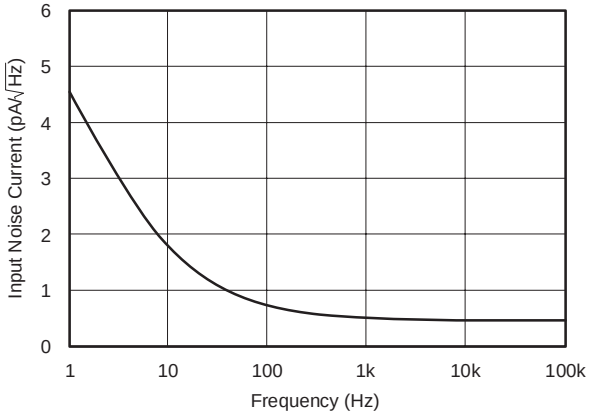

OUTPUT CURRENT NOISE DENSITY vs FREQUENCY

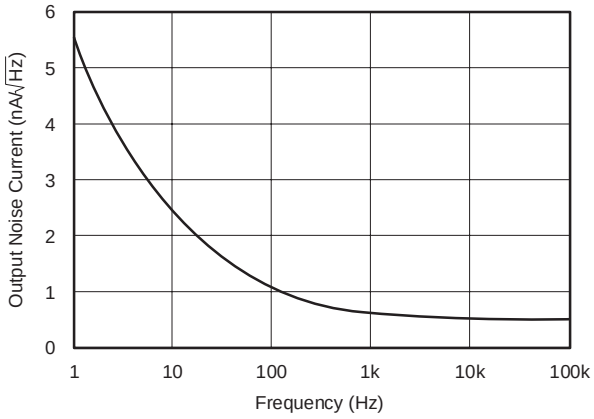

THEORY OF OPERATION

A simplified schematic of the XTR101 is shown in Figure 1. Basically, the amplifiers A_1 and A_2 act as a single power-supply instrumentation amplifier controlling a current source, A_3 and Q_1. Operation is determined by an internal feedback loop. e_1 applied to pin 3 will also appear at pin 5, and similarly, e_2 will appear at pin 6. Therefore, the current in R_S (the span setting resistor) will be $I_S = (e_2 - e_1)/R_S = e_{IN}/R_S$. This current combines with the current I_3 to form I_1. The circuit is configured such that I_2 is 19 times I_1. From this point, the derivation of the transfer function is straightforward but lengthy. The result is shown in Figure 1.

Examination of the transfer function shows that I_O has a lower range-limit of 4mA when $e_{IN} = e_2 - e_1 = 0V$. This 4mA is composed of 2mA quiescent current exiting pin 7 plus 2mA from the current sources. The upper range limit of I_O is set to 20mA by the proper selection of R_S based on the upper range limit of e_{IN}. Specifically, R_S is chosen for a 16mA output current span for the given full-scale input voltage span.

$$\text{For example, } \left(0.016\frac{\text{amps}}{\text{volt}} + \frac{40}{R_S}\right)(e_{IN}\ \text{full-scale}) = 16\text{mA}.$$

Note that since I_O is unipolar, e_2 must be kept larger than e_1 (that is, $e_2 \geq e_1$ or $e_{IN} \geq 0$). Also note that in order not to exceed the output upper range limit of 20mA, e_{IN} must be kept less than 1V when $R_S = \infty$ and proportionately less as R_S is reduced.

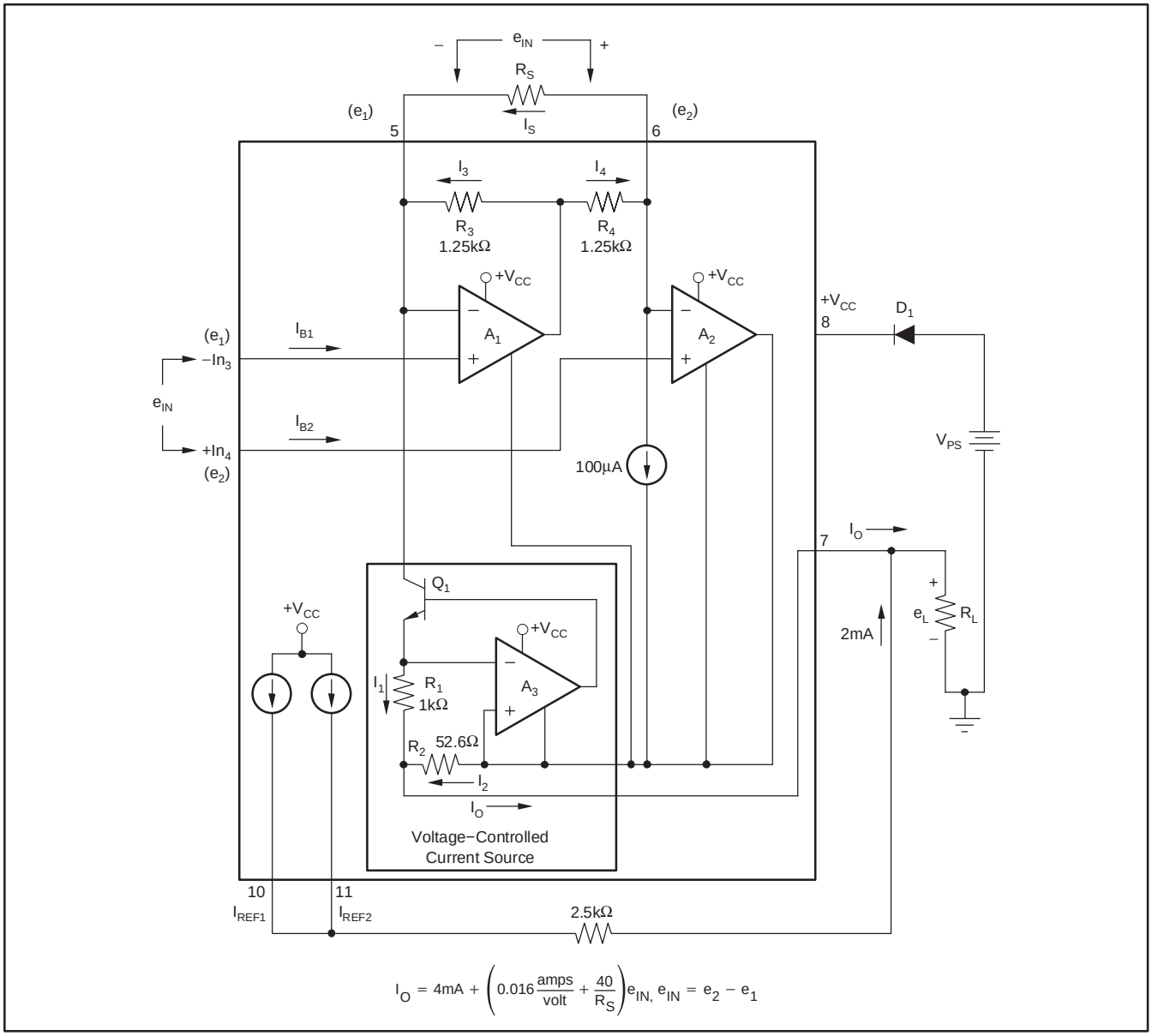

Figure 1. Simplified Schematic of the XTR101

INSTALLATION AND OPERATING INSTRUCTIONS

BASIC CONNECTION

See Figure 1 for the basic connection of the XTR101. A difference voltage applied between input pins 3 and 4 will cause a current of 4-20mA to circulate in the two-wire output loop (through R_L, V_{PS}, and D_1). For applications requiring moderate accuracy, the XTR101 operates very cost-effectively with just its internal drive transistor. For more demanding applications (high accuracy in high gain), an external NPN transistor can be added in parallel with the internal one. This keeps the heat out of the XTR101 package and minimizes thermal feedback to the input stage. Also, in such applications where the e_{IN} full-scale is small (< 50mV) and R_{SPAN} is small (< 150Ω), caution should be taken to consider errors from the external span circuit plus high amplification of offset drift and noise.

OPTIONAL EXTERNAL TRANSISTOR

The optional external transistor, when used, is connected in parallel with the XTR101 internal transistor. The purpose is to increase accuracy by reducing heat change inside the XTR101 package as the output current spans from 4-20mA. Under normal operating conditions, the internal transistor is never completely turned off, as shown in Figure 2. This maintains frequency stability with varying external transistor characteristics and wiring capacitance. The actual current sharing between internal and external transistors is dependent on two factors:

1. relative geometry of emitter areas, and
2. relative package dissipation (case size and thermal conductivity).

For best results, the external device should have a larger base-emitter area and smaller package. It will, upon turn-on, take about [0.95(I_O − 3.3mA)]mA. However, it will heat faster and take a greater share after a few seconds.

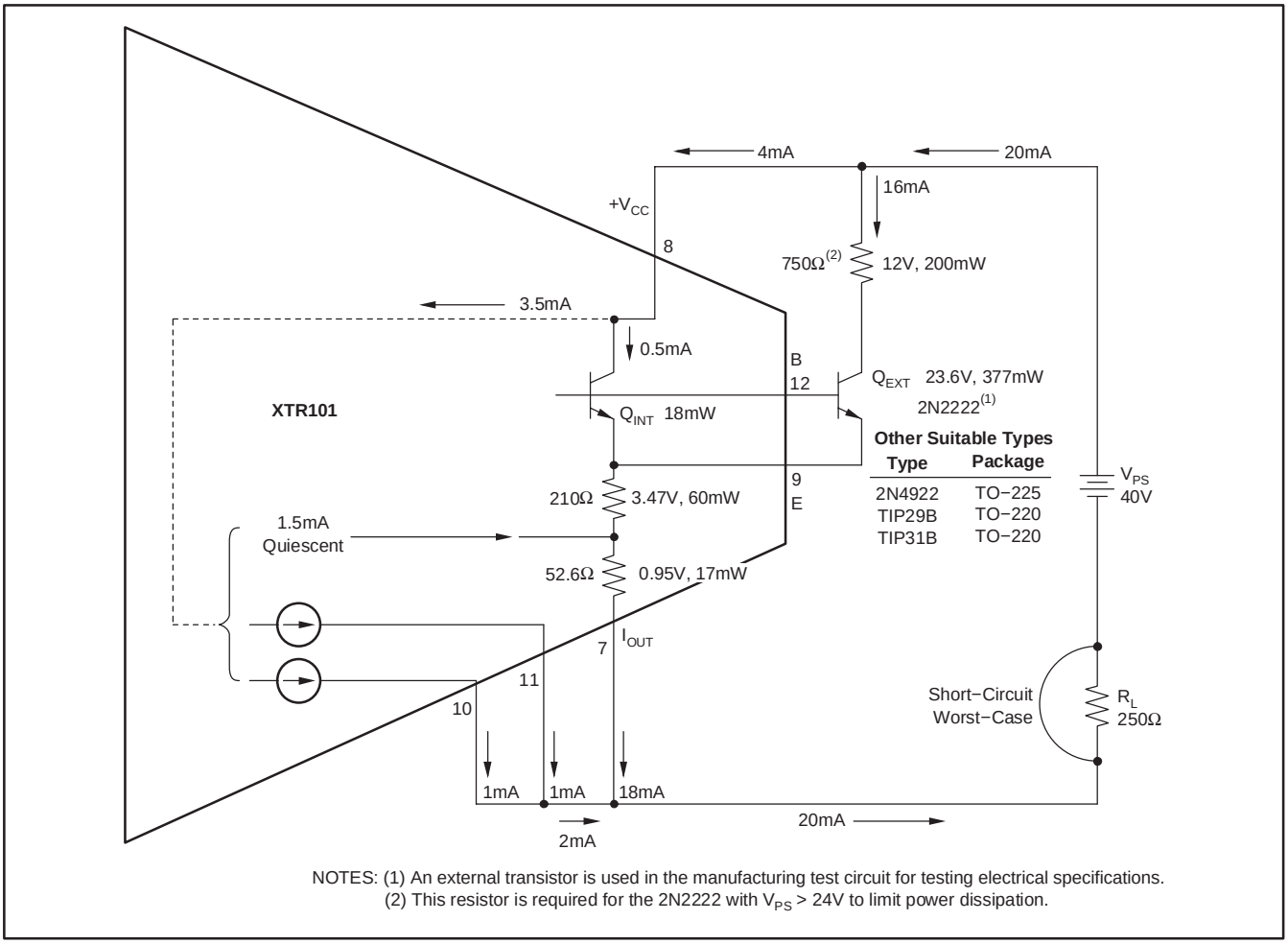

NOTES: (1) An external transistor is used in the manufacturing test circuit for testing electrical specifications.
(2) This resistor is required for the 2N2222 with V_{PS} > 24V to limit power dissipation.

Figure 2. Power Calculation of the XTR101 with an External Transistor

Although any NPN of suitable power rating will operate with the XTR101, two readily available transistors are recommended:

1. 2N2222 in the TO-18 package. For power-supply voltages above 24V, a 750Ω, 1/2W resistor should be connected in series with the collector. This will limit the power dissipation to 377mW under the worst-case conditions; see Figure 2. Thus, the 2N2222 will safely operate below its 400mW rating at the upper temperature of +85°C. Heat sinking the 2N2222 will result in greatly reduced accuracy improvement and is not recommended.

2. TIP29B in the TO-220 package. This transistor will operate over the specified temperature and output voltage range without a series collector resistor. Heat sinking the TIP29B will result in slightly less accuracy improvement. It can be done, however, when mechanical constraints require it.

ACCURACY WITH AND WITHOUT AN EXTERNAL TRANSISTOR

The XTR101 has been tested in a circuit using an external transistor. The relative difference in accuracy with and without an external transistor is shown in Figure 3. Notice that a dramatic improvement in offset voltage change with supply voltage is evident for any value of load resistor.

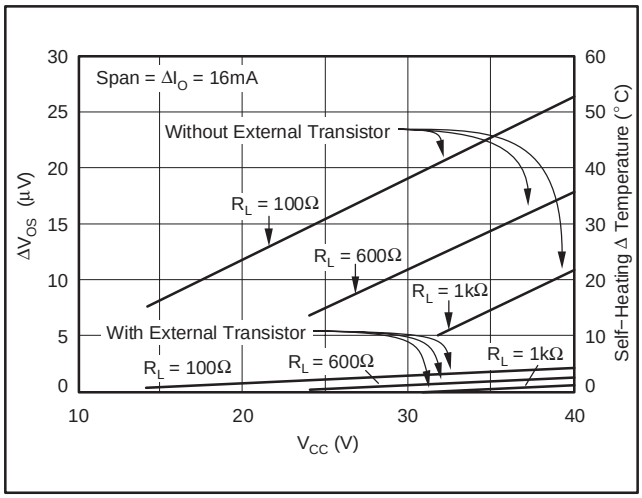

Figure 3. Thermal Feedback Due to Change in Output Current

MAJOR POINTS TO CONSIDER WHEN USING THE XTR101

1. The leads to R_S should be kept as short as possible to reduce noise pick-up and parasitic resistance.
2. $+V_{CC}$ should be bypassed with a 0.01μF capacitor as close to the unit as possible (pin 8 to pin 7).
3. Always keep the input voltages within their range of linear operation, +4V to +6V (e_1 and e_2 measured with respect to pin 7).
4. The maximum input signal level (e_{INFS}) is 1V with $R_S = \infty$ and proportionally less as R_S decreases.
5. Always return the current references (pins 10 and 11) to the output (pin 7) through an appropriate resistor. If the references are not used for biasing or excitation, connect them together to pin 7. Each reference must have between 0V and $+(V_{CC} - 4V)$ with respect to pin 7.
6. Always choose R_L (including line resistance) so that the voltage between pins 7 and 8 ($+V_{CC}$) remains within the 11.6V to 40V range as the output changes between the 4-20mA range (as shown in Figure 4).
7. It is recommended that a reverse polarity protection diode (D_1 in Figure 1) be used. This will prevent damage to the XTR101 caused by a momentary (such as a transient) or long-term application of the wrong polarity of voltage between pins 7 and 8.
8. Consider PC board layout which minimizes parasitic capacitance, especially in high gain.

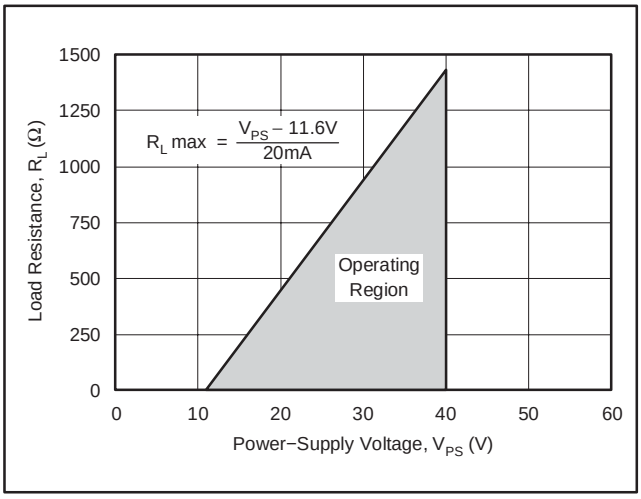

Figure 4. Power-Supply Operating Range

SELECTING THE R_S

R_{SPAN} is chosen so that a given full-scale input span (e_{INFS}) will result in the desired full-scale output span of ΔI_{OFS}:

$$\left[\left(0.016\frac{\text{amps}}{\text{volt}}\right) + \left(\frac{40}{R_S}\right)\right] \Delta e_{IN} = \Delta I_O = 16\text{mA}.$$

Solving for R_S:

$$R_S = \frac{40}{\Delta I_O/\Delta e_{IN} - 0.016\frac{\text{amps}}{\text{volt}}} \qquad (1)$$

For example, if Δe_{INFS} = 100mV for ΔI_{OFS} = 16mA,

$$R_S = \frac{40}{(16\text{mA}/100\text{mV}) - 0.016} = \frac{40}{0.16 - 0.016}$$
$$= \frac{40}{0.144} = 278\Omega$$

See the Typical Characteristics for a plot of R_S vs Δe_{INFS}. Note that in order not to exceed the 20mA upper range limit, e_{IN} must be less than 1V when $R_S = \infty$ and proportionately smaller as R_S decreases.

BIASING THE INPUTS

Because the XTR operates from a single supply, both e_1 and e_2 must be biased approximately 5V above the voltage at pin 7 to assure linear response. This is easily done by using one or both current sources and an external resistor, R_2. Figure 5 shows the simplest case—a floating voltage source e'_2. The 2mA from the current sources flows through the 2.5kΩ value of R_2 and both e_1 and e_2 are raised by the required 5V with respect to pin 7. For linear operation the constraint is:

$$+4\text{V} \le e_1 \le +6\text{V}$$
$$+4\text{V} \le e_2 \le +6\text{V}$$

The offset adjustment is used to remove the offset voltage of the input amplifier. When the input differential voltage (e_{IN}) equals zero, adjust for 4mA output.

Figure 6 shows a similar connection for a resistive transducer. The transducer could be excited either by one (as shown) or both current sources. Also, the offset adjustment has higher resolution compared to Figure 5.

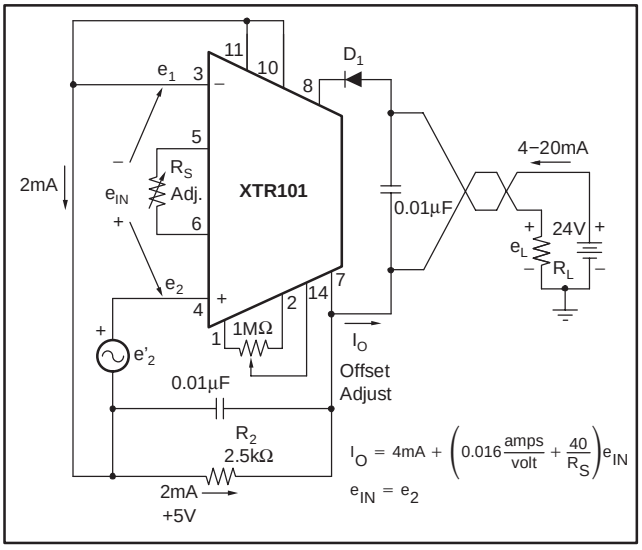

Figure 5. Basic Connection for Floating Voltage Source

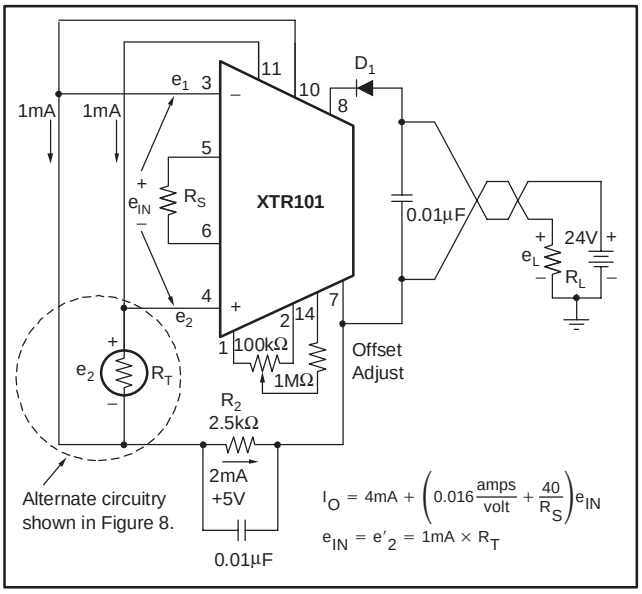

Figure 6. Basic Connection for Resistive Source

CMV AND CMR

The XTR101 is designed to operate with a nominal 5V common-mode voltage at the input and will function properly with either input operating over the range of 4V to 6V with respect to pin 7. The error caused by the 5V CMV is already included in the accuracy specifications.

If the inputs are biased at some other CMV, then an input offset error term is (CMV − 5)/CMRR, where CMR is in dB, and CMRR is in V/V.

SIGNAL SUPPRESSION AND ELEVATION

In some applications, it is desired to have suppressed zero range (input signal elevation) or elevated zero range (input signal suppression). This is easily accomplished with the XTR101 by using the current sources to create the suppression/elevation voltage. The basic concept is shown in Figure 7 and Figure 8(a). In this example, the sensor voltage is derived from R_T (a thermistor, RTD, or other variable resistance element) and excited by one of the 1mA current sources. The other current source is used to create the elevated zero range voltage. Figure 8(b), (c), and (d) show some of the possible circuit variations. These circuits have the desirable feature of noninteractive span and suppression/elevation adjustments.

Note: It is not recommended to use the optional offset voltage null (pins 1, 2, and 14) for elevation/suppression. This trim capability is used only to null the amplifier's input offset voltage. In many applications the already low offset voltage (typically 20µV) will not need to be nulled at all. Adjusting the offset voltage to non-zero values will disturb the voltage drift by ±0.3µV/°C per 100µV or induced offset.

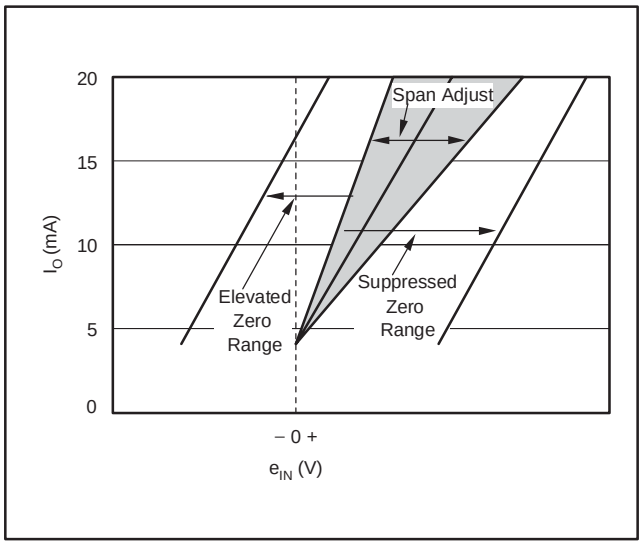

Figure 7. Elevation and Suppression Graph

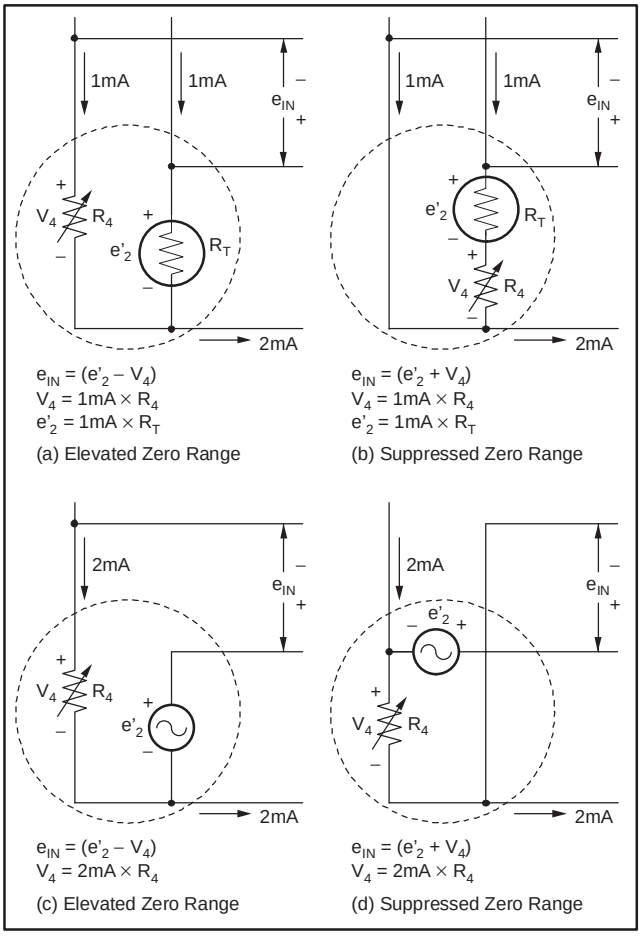

Figure 8. Elevation and Suppression Circuits

APPLICATION INFORMATION

The small size, low offset voltage and drift, excellent linearity, and internal precision current sources make the XTR101 ideal for a variety of two-wire transmitter applications. It can be used by OEMs producing different types of transducer transmitter modules and by data acquisition systems manufacturers who gather transducer data. Current-mode transmission greatly reduces noise interference. The two-wire nature of the device allows economical signal conditioning at the transducer. Thus the XTR101 is, in general, very suitable for individualized and special-purpose applications.

EXAMPLE 1

An RTD transducer is shown in Figure 9.

Given a process with temperature limits of +25°C and +150°C, configure the XTR101 to measure the temperature with a platinum RTD which produces 100Ω at 0°C and 200Ω at +266°C (obtained from standard RTD tables). Transmit 4mA for +25°C and 20mA for +150°C.

COMPUTING R_S:

The sensitivity of the RTD is $\Delta R/\Delta T = 100\Omega/266°C$. When excited with a 1mA current source for a 25°C to 150°C range (a 125°C span), the span of e_{IN} is $1mA \times (100\Omega/266°C) \times 125°C = 47mV = \Delta e_{IN}$.

From Equation 1, $$R_S = \frac{40}{\Delta I_O/\Delta e_{IN} - 0.016\frac{amps}{volt}}$$

$$R_S = \frac{40}{16mA/47mV - 0.016A/V} = \frac{40}{0.3244} = 123.3\Omega$$

Span adjustment (calibration) is accomplished by trimming R_S.

COMPUTING R_4:

$$\text{At } +25°C, e'_2 = 1mA(R_T + \Delta R_T)$$
$$= 1mA\left[100\Omega + \frac{100\Omega}{266°C} \times 25°C\right]$$
$$= 1mA(109.4\Omega) = 109.4mV$$

In order to make the lower range limit of 25°C correspond to the output lower range limit of 4mA, the input circuitry shown in Figure 9 is used.

e_{IN}, the XTR101 differential input, is made 0 at 25°C or:

$$e'_{2\ 25°C} - V_4$$
$$\text{thus, } V_4 = e'_{2\ 25°C} = 109.4mV$$
$$R_4 = \frac{V_4}{1mA} = \frac{109.4mV}{1mA} = 109.4\Omega$$

COMPUTING R_2 AND CHECKING CMV:

$$\text{At } +25°C, e'_2 = 109.4mV$$
$$\text{At } +150°C, e'_2 = 1mA(R_T + \Delta R_T)$$
$$= 1mA\left[100\Omega + \frac{100\Omega}{266°C} \times 150°C\right]$$
$$= 156.4mV$$

Since both e'_2 and V_4 are small relative to the desired 5V common-mode voltage, they may be ignored in computing R_2 as long as the CMV is met.

$$R_2 = \frac{5V}{2mA} = 2.5k\Omega$$

e_2 min = 5V + 0.1094V
e_2 max = 5V + 0.1564V
e_1 = 5V + 0.1094V

⟩ The 4V to 6V CMV requirement is met.

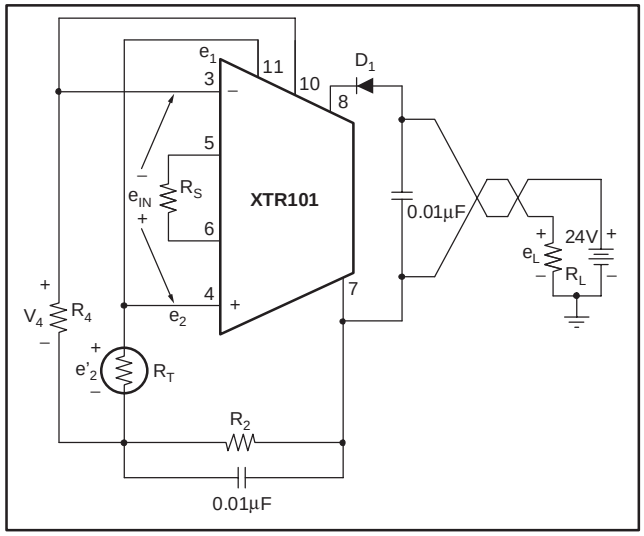

Figure 9. Circuit for Example 1

EXAMPLE 2

A thermocouple transducer is shown in Figure 10.

Given a process with temperature (T_1) limits of 0°C and +1000°C, configure the XTR101 to measure the temperature with a type J thermocouple that produces a 58mV change for 1000°C change. Use a semiconductor diode for cold junction compensation to make the measurement relative to 0°C. This is accomplished by supplying a compensating voltage (V_{R6}) equal to that normally produced by the thermocouple with its cold junction (T_2) at ambient. At a typical ambient of +25°C, this is 1.28mV (obtained from standard thermocouple tables with reference junction of 0°C). Transmit 4mA for T_1 = 0°C and 20mA for T_1 = +1000°C. Note: $e_{IN} = e_2 - e_1$ indicates that T_1 is relative to T_2.

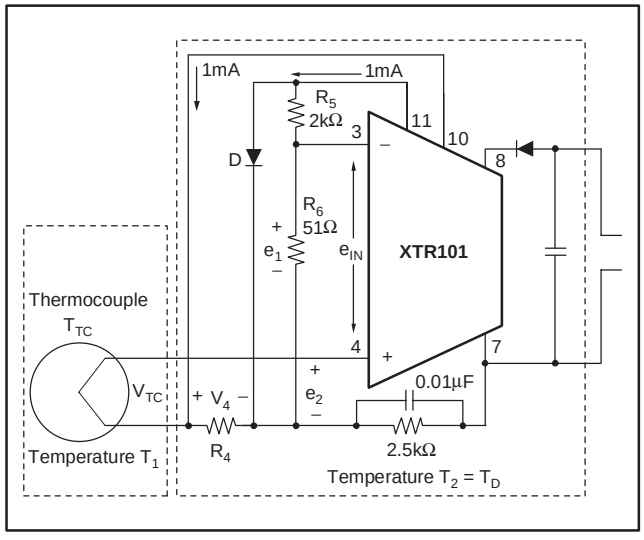

Figure 10. Thermocouple Input Circuit with Two Temperature Regions and Diode (D) Cold Junction Compensation

ESTABLISHING R_S:

The input full-scale span is 58mV (Δe_{INFS} = 58mV).

R_S is found from Equation 1.

$$R_S = \frac{40}{\Delta I_O/\Delta e_{IN} - 0.016\frac{\text{amps}}{\text{volt}}}$$

$$= \frac{40}{16\text{mA}/58\text{mV} - 0.016\text{A/V}} = \frac{40}{0.2599} = 153.9\Omega$$

SELECTING R_4:

R_4 is chosen to make the output 4mA at T_{TC} = 0°C (V_{TC} = −1.28mV) and T_D = +25°C (V_D = 0.6V); see Figure 10.

V_{TC} will be −1.28mV when T_{TC} = 0°C and the reference junction is at +25°C. e_1 must be computed for the condition of T_D = +25°C to make e_{IN} = 0V.

$$V_{D\,25^oC} = 600\text{mV}$$

$$e_{1\,25^oC} = 600\text{mV}\left(\frac{51}{2051}\right) = 14.9\text{mV}$$

$$e_{IN} = e_2 - e_1 = V_{TC} + V_4 - e_1$$

With e_{IN} = 0 and V_{TC} = −1.28mV,

$$V_4 = e_1 + e_{IN} - V_{TC}$$

$$= 14.9\text{mV} + 0\text{V} - (-1.28\text{mV})$$

$$1\text{mA}(R_4) = 16.18\text{mV}$$

$$R_4 = 16.18\Omega$$

COLD JUNCTION COMPENSATION:

A temperature reference circuit is shown in Figure 11.

The diode voltage has the form:

$$V_D = \frac{KT}{q}\ \ln\ \frac{I_{DIODE}}{I_{SAT}}$$

Typically at T_2 = +25°C, V_D = 0.6V and $\Delta V_D/\Delta T$ = −2mV/°C. R_5 and R_6 form a voltage divider for the diode voltage V_D. The divider values are selected so that the gradient $\Delta V_D/\Delta T$ equals the gradient of the thermocouple at the reference temperature. At +25°C this is approximately 52µV/°C (obtained from a standard thermocouple table); therefore,

$$\frac{\Delta T_C}{\Delta T} = \frac{\Delta V_D}{\Delta T}\left(\frac{R_6}{R_5 + R_6}\right)$$

$$\frac{52\mu\text{V}}{^\circ\text{C}} = \frac{2000\mu\text{V}}{^\circ\text{C}}\left(\frac{R_6}{R_5 + R_6}\right) \qquad (2)$$

R_5 is chosen as 2kΩ to be much larger than the resistance of the diode. Solving for R_6 yields 51Ω.

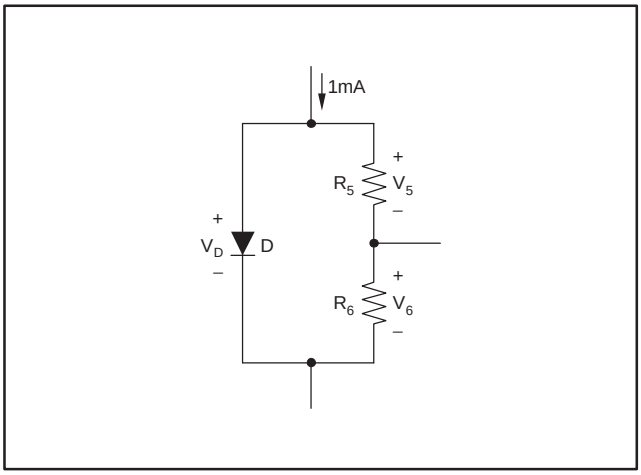

Figure 11. Cold Junction Compensation Circuit

THERMOCOUPLE BURN-OUT INDICATION

In process control applications it is desirable to detect when a thermocouple has burned out. This is typically done by forcing the two-wire transmitter current to either limit when the thermocouple impedance goes very high. The circuits of Figure 16 and Figure 17 inherently have downscale indication. When the impedance of the thermocouple gets very large (open) the bias current flowing into the + input (large impedance) will cause I_O to go to its lower range limit value (about 3.8mA). If upscale indication is desired, the circuit of Figure 18 should be used. When T_C opens, the output will go to its upper range limit value (about 25mA or higher).

OPTIONAL INPUT OFFSET VOLTAGE TRIM

The XTR101 has provisions for nulling the input offset voltage associated with the input amplifiers. In many applications the already low offset voltages (30µV max for the B grade and 60µV max for the A grade) will not need to be nulled at all. The null adjustment can be done with a potentiometer at pins 1, 2, and 14; see Figure 5 and Figure 6. Either of these two circuits may be used. NOTE: It is not recommended to use this input offset voltage nulling capability for elevation or suppression. See the *Signal Suppression and Elevation* section for the proper techniques.

OPTIONAL BANDWIDTH CONTROL

Low-pass filtering is recommended where possible and can be done by either one of two techniques; see Figure 12. C_2 connected to pins 3 and 4 will reduce the bandwidth with a cutoff frequency given by:

$$f_{CO} = \frac{15.9}{(R_1 + R_2 + R_3 + R_4)(C_2 + 3pF)}$$

This method has the disadvantage of having f_{CO} vary with R_1, R_2, R_3, R_4, and it may require large values of R_3 and R_4. The other method, using C_1, will use smaller values of capacitance and is not a function of the input resistors. It is, however, more subject to nonlinear distortion caused by slew rate limiting. This is normally not a problem with the slow signals associated with most process control transducers. The relationship between C_1 and f_{CO} is shown in the Typical Characteristics.

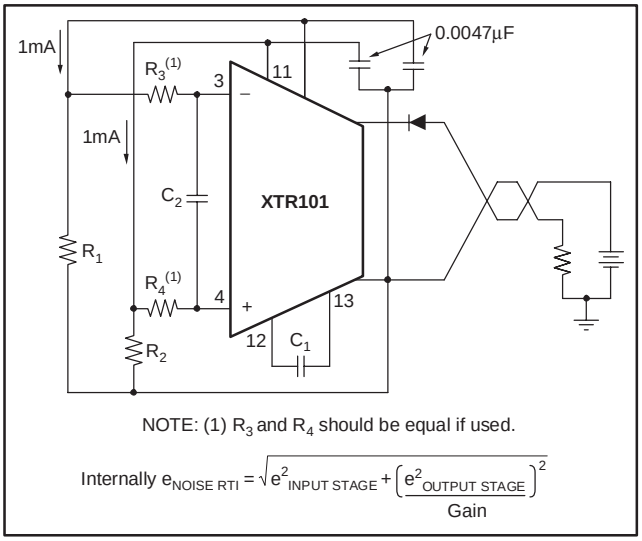

Figure 12. Optional Filtering

APPLICATION CIRCUITS

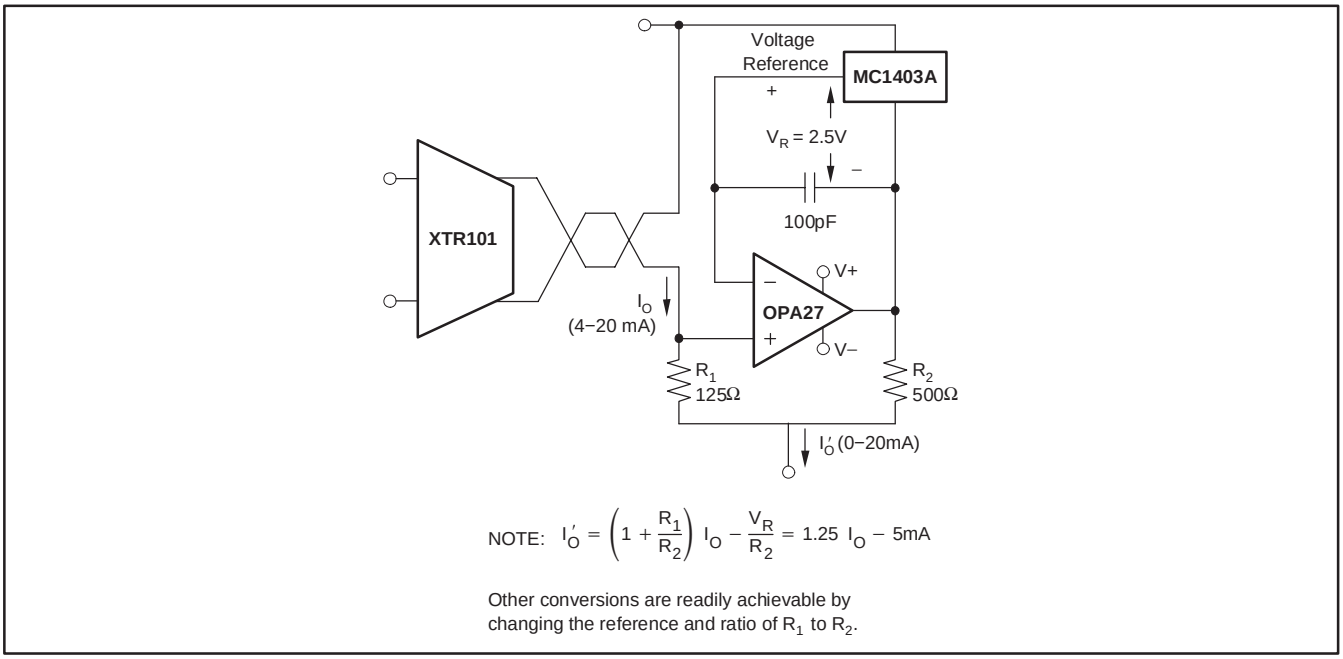

Figure 13. 0-20mA Output Converter

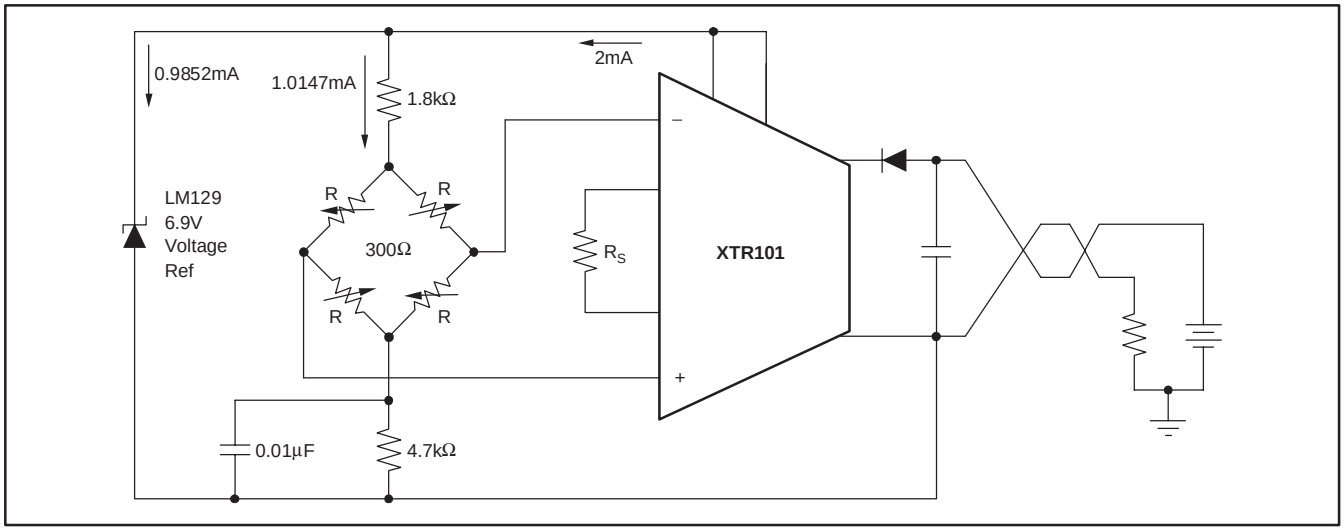

Figure 14. Bridge Input, Voltage Excitation

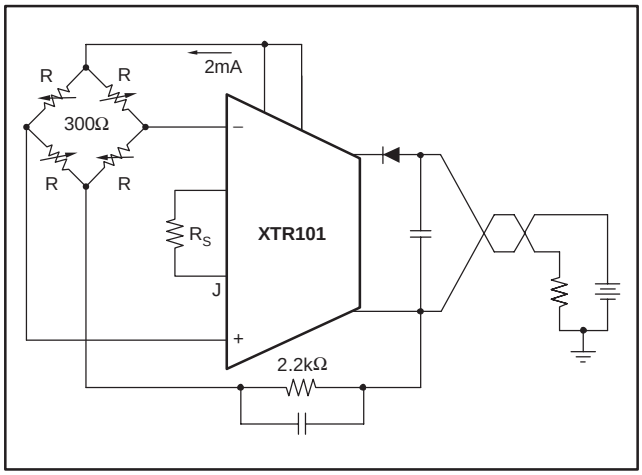

Figure 15. Bridge Input, Current Excitiation

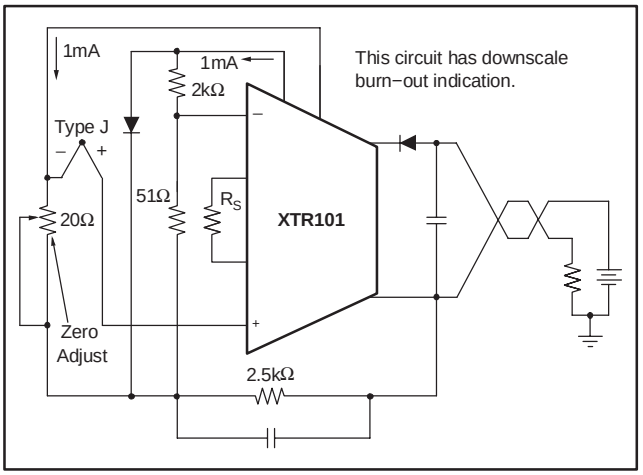

Figure 17. Thermocouple Input with Diode Cold Junction Compensation

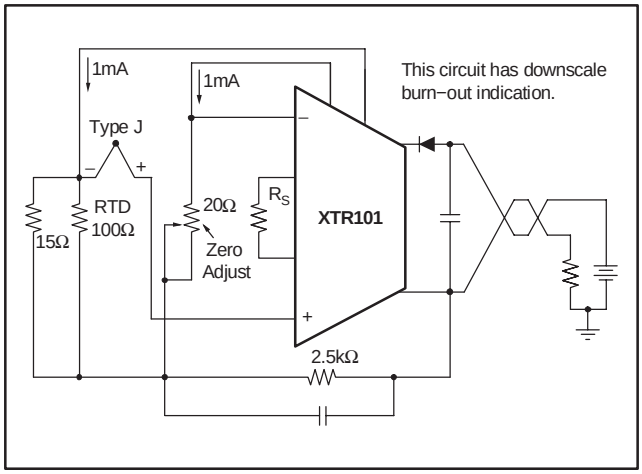

Figure 16. Thermocouple Input with RTD Cold Junction Compensation

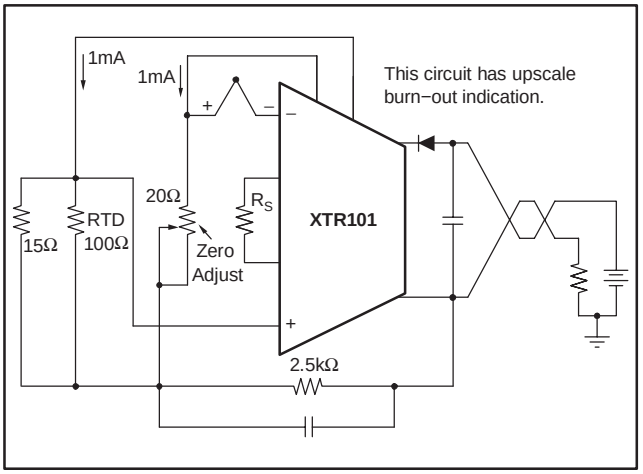

Figure 18. Thermocouple Input with RTD Cold Junction Compensation

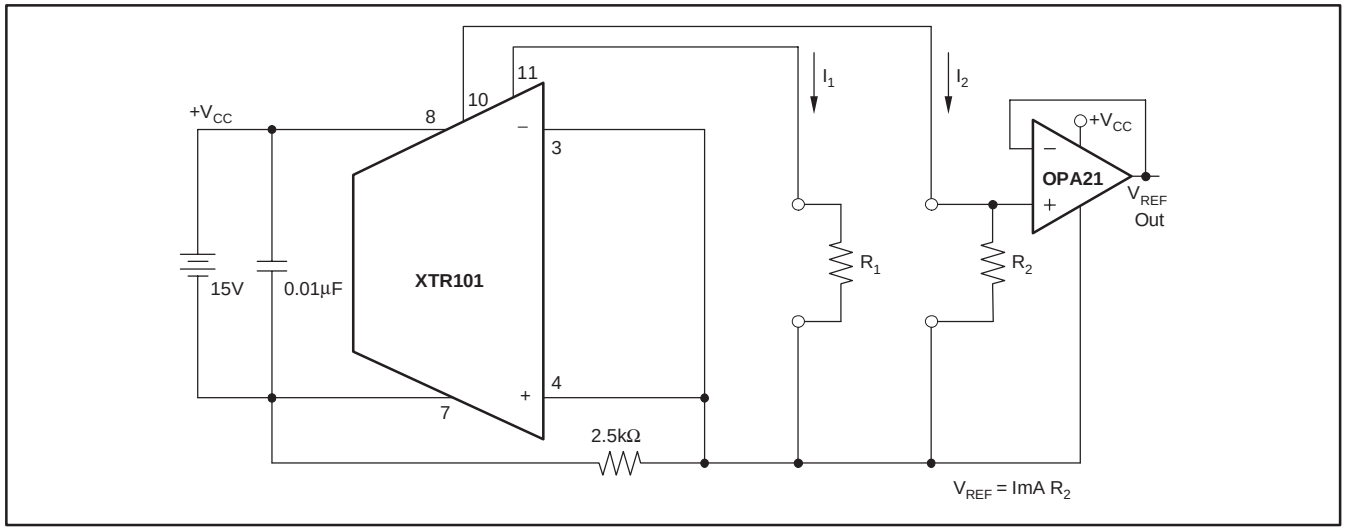

Figure 19. Dual Precision Current Sources Operated from One Supply

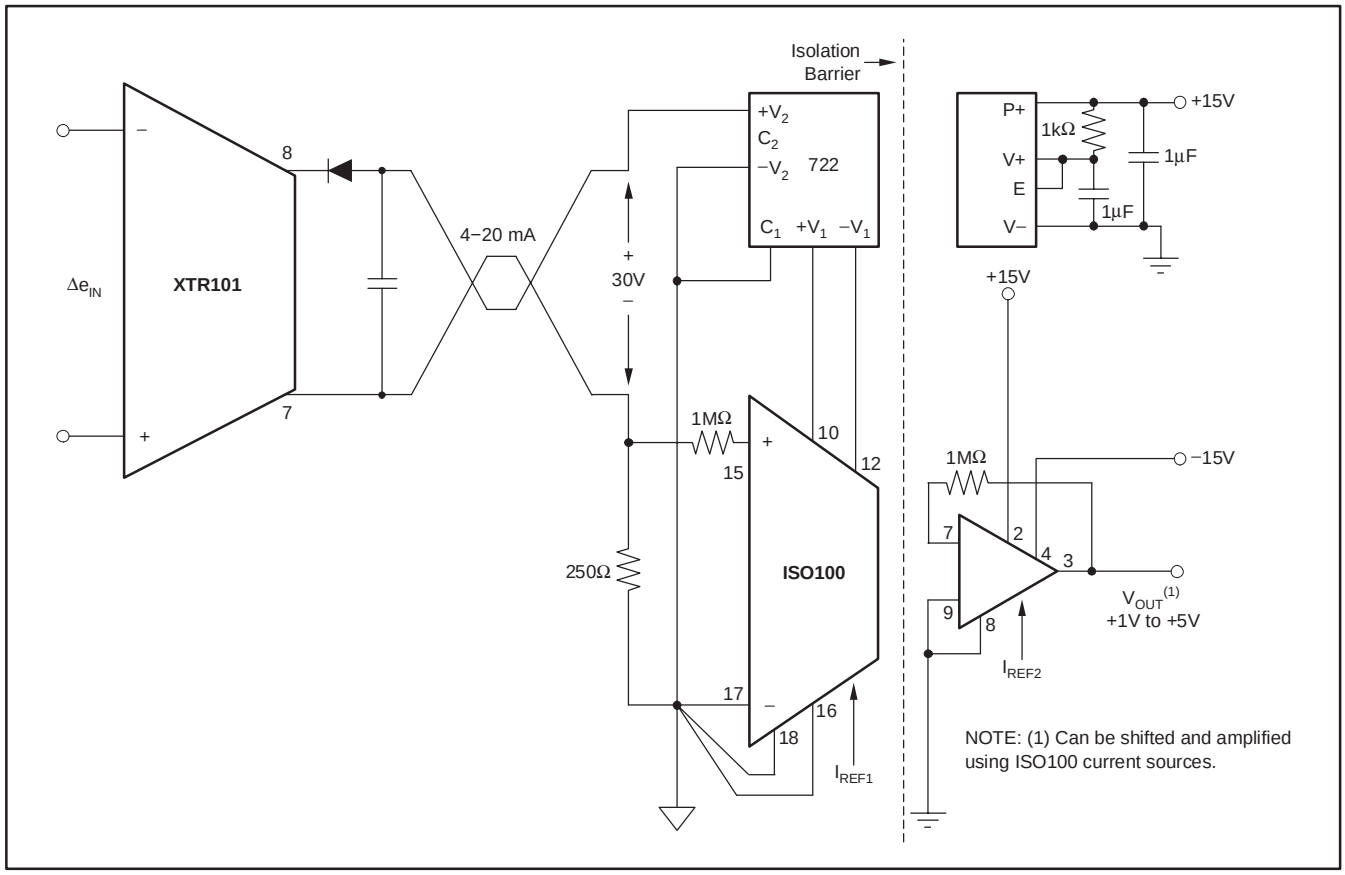

Figure 20. Isolated Two-Wire Current Loop

DETAILED ERROR ANALYSIS

The ideal output current is:

$$I_{O\ IDEAL} = 4mA + K\ e_{IN} \quad (3)$$

where K is the span (gain) term, $\left(0.016\frac{amps}{volt} + \left(\frac{40}{R_S}\right)\right)$

In the XTR101 there are three major components of error:

1. σ_O = errors associated with the output stage.
2. σ_S = errors associated with span adjustment.
3. σ_I = errors associated with the input stage.

The transfer function including these errors is:

$$I_{O\ ACTUAL} = (4mA + \sigma_O) + K(1 + \sigma_S)(e_{IN} + \sigma_I) \quad (4)$$

When this expression is expanded, second-order terms (σ_S, σ_I) dropped, and terms collected, the result is:

$$I_{O\ ACTUAL} = (4mA + \sigma_O) + K\ e_{IN} + K\sigma_I + K\sigma_S\ e_{IN} \quad (5)$$

The error in the output current is $I_{O\ ACTUAL} - I_{O\ IDEAL}$ and can be found by subtracting Equation 3 from Equation 5.

$$I_{O\ ERROR} = \sigma_O + K\sigma_I + K\sigma_S\ e_{IN} \quad (6)$$

This is a general error expression. The composition of each component of error depends on the circuitry inside the XTR101 and the particular circuit in which it is applied. The circuit of Figure 9 will be used to illustrate the principles.

$$\sigma_O = I_{OS\ RTO} \quad (7)$$

$$\sigma_S = \varepsilon_{NONLINEARITY} + \varepsilon_{SPAN} \quad (8)$$

$$\sigma_I = V_{OSI} + (I_{B1} + R_4 - I_{B2}\ R_T) + \frac{\Delta V_{CC}}{PSRR} + \frac{\frac{(e_1+e_2)}{2} - 5V}{CMRR} \quad (9)$$

The term in parentheses may be written in terms of offset current and resistor mismatches as $I_{B1}\ \Delta R + I_{OS}'\ R_4$.

V_{OSI}[(1)] = input offset voltage.

I_{B1}[(1)], I_{B2}[(1)] = input bias current.

I_{OSI}[(1)] = input offset current.

$I_{OS\ RTO}$[(1)] = output offset current error.

$\Delta R = R_T - R_4$ = mismatch in resistor.

ΔV_{CC} = change supply voltage between pins 7 and 8 away from 24V nominal.

PSRR[(1)] = power-supply rejection ratio.

CMRR[(1)] = common-mode rejection ratio.

ε_{NONLIN}[(1)] = span nonlinearity.

ε_{SPAN}[(1)] = span equation error.

Untrimmed error = 5% max. May be trimmed to zero.

(1) These items can be found in the Electrical Characteristics.

EXAMPLE 3

See the circuit in Figure 9 with the XTR101BG specifications and the following conditions: R_T = 109.4Ω at 25°C, R_T = 156.4Ω at 150°C, I_O = 4mA at 25°C, I_O = 20mA at 150°C, R_S = 123.3Ω, R_4 = 109Ω, R_L = 250Ω, R_{LINE} = 100Ω, V_{DI} = 0.6V, and V_{PS} = 24V ± 0.5%. Determine the % error at the upper and lower range values.

A. AT THE LOWER RANGE VALUE (T = +25°C)

$$\sigma_O = I_{OS\ RTO} = \pm 6\mu A$$

$$\sigma_I = V_{OSI} + (I_{BI}\ \Delta R + I_{OSI}\ R_4) + \frac{\Delta V_{CC}}{PSRR} + \left[\frac{\frac{[e_1+e_2]}{2} - 5V}{CMRR}\right]$$

$$\Delta R = R_{T\ 25^oC} - R_4 = 109.4 - 109 \approx 0$$

$$\Delta V_{CC} = (24 \times 0.005) + 4mA(250\Omega + 100\Omega) + 0.6V$$
$$= 120mV + 1400mV + 600mV = 2120mV$$

$$e_1 = (2mA \times 2.5k\Omega) + (1mA \times 109\Omega)$$
$$= 5.109V$$

$$e_2 = (2mA \times 2.5k\Omega) + (1mA \times 109.4\Omega)$$
$$= 5.1094V$$

$$\frac{(e_1 + e_2)}{2} - 5V = 0.1092V$$

$$PSRR = 3.16 \times 10^5 \text{ for } 110dB$$

$$CMRR = 31.6 \times 10^3 \text{ for } 90dB$$

$$\sigma_1 = 30\mu V + (150nA \times 0 + 20nA \times 109\Omega) + \frac{2120mV}{3.16 \times 10^5} + \frac{0.1092V}{3.16 \times 10^3} \quad (10)$$
$$= 30\mu V + 2.18\mu V + 6.7\mu V + 3.46\mu V$$
$$= 42.34\mu V$$

$$\sigma_S = \varepsilon_{NONLIN} + \varepsilon_{SPAN}$$
$$= 0.0001 + 0 \text{ (assumes trim of } R_S)$$

$$I_{O\ ERROR} = \sigma_O + K\ \sigma_I + K\ \sigma_S\ e_{IN}$$

$$K = 0.016 + \frac{40}{R_S} = 0.016 + \frac{40}{123.3\Omega}$$
$$= 0.340\frac{amps}{volts}$$

$$e_{IN} = e_2 - V_4 = I_{REF1}\ R_{T\ 25^oC} - I_{REF2}\ R_4$$

Since $R_{T\ 25°C} = R_4$:

$$e_{IN} = (I_{REF1} - I_{REF2})\ R_4 = 0.4\mu A \times 109\Omega$$
$$= 43.6\mu V$$

Since the maximum mismatch of the current references is 0.04% of 1mA = 0.4μA:

$$I_O \text{ error} = 6\mu A + (0.34A/V \times 42.34\mu V) + (0.34A/V \times 0.0001 \times 43.6\mu V)$$
$$= 6\mu A + 14.40\mu A + 0.0015\mu A = 20.40\mu A$$

$$\% \text{ error} = \frac{20.40\mu A}{16mA} \times 100\%$$

0.13% of span at lower range value.

B. AT THE UPPER RANGE VALUE (T = +150°C)

$$\Delta R = R_{T\,150^oC} - R_4 = 156.4 - 109.4 = 47\Omega$$

$$\Delta V_{CC} = (24 \times 0.005) + 20mA(250\Omega + 100\Omega) + 0.6V = 7720mV$$

$$e_1 = 5.109V$$

$$e_2 = (2mA \times 2.5k\Omega) + (1mA \times 156.4\Omega) = 5.156V$$

$$\frac{(e_1 - e_2)}{2} - 5V = 0.1325V$$

$$\sigma_O = 6\mu A$$

$$\sigma_1 = 30\mu V + (150nA \times 47\Omega + 20nA \times 190\Omega) + \frac{7720mV}{3.16 \times 10^5} + \frac{0.1325V}{3.16 \times 10^3}$$
$$= 30\mu V + 9.23\mu V + 24\mu V + 4.19\mu V = 67.42\mu V$$

$$\sigma_S = 0.0001$$

$$e_{IN} = e'_2 - V_4 = I_{REF1} R_{T\,150^oC} - I_{REF2} R_4$$
$$= (1mA \times 156.4\Omega) - (1mA \times 109\Omega) = 47mV$$

$$I_O \text{ error} = \sigma_O + K\,\sigma_I + K\,\sigma_S\,e_{IN} \quad (11)$$
$$= 6\mu A + (0.34A/V \times 67.42\mu V) + (0.34A/V \times 0.0001 \times 47000\mu V)$$
$$= 6\mu A + 22.92\mu A + 1.60\mu A = 30.52\mu A$$

$$\%\text{ error} = \frac{30.52\mu A}{16mA} \times 100\%$$

0.19% of span at upper range value.

CONCLUSIONS

Lower Range: From Equation 10, it is observed that the predominant error term is the input offset voltage (30µV for the B grade). This is of little consequence in many applications. $V_{OS\ RTI}$ can, however, be nulled using the plots shown in Figure 5 and Figure 6. The result is an error of 0.06% of span instead of 0.13% of span.

Upper Range: From Equation 11, the predominant errors are $I_{OS\ RTO}$ (6µA), $V_{OS\ RTI}$ (30µV), and I_B (150nA), max, B grade. Both I_{OS} and V_{OS} can be trimmed to zero; however, the result is an error of 0.09% of span instead of 0.19% of span.

RECOMMENDED HANDLING PROCEDURES FOR INTEGRATED CIRCUITS

All semiconductor devices are vulnerable, in varying degrees, to damage from the discharge of electrostatic energy. Such damage can cause performance degradation or failure, either immediate or latent. As a general practice, we recommend the following handling procedures to reduce the risk of electrostatic damage:

1. Remove the static-generating materials (such as untreated plastic) from all areas that handle microcircuits.
2. Ground all operators, equipment, and work stations.
3. Transport and ship microcircuits, or products incorporating microcircuits, in static-free, shielded containers.
4. Connect together all leads of each device by means of a conductive material when the device is not connected into a circuit.
5. Control relative humidity to as high a value as practical (50% recommended).

PACKAGING INFORMATION

Orderable Device	Status (1)	Package Type	Package Drawing	Pins	Package Qty	Eco Plan (2)	Lead/Ball Finish	MSL Peak Temp (3)	Op Temp (°C)	Top-Side Markings (4)	Samples
XTR101AG	NRND	CDIP SB	JD	14	1	Green (RoHS & no Sb/Br)	AU	N / A for Pkg Type		XTR101AG	
XTR101AP	ACTIVE	PDIP	N	14	25	Green (RoHS & no Sb/Br)	CU NIPDAU	N / A for Pkg Type		XTR101AP	Samples
XTR101APG4	ACTIVE	PDIP	N	14	25	Green (RoHS & no Sb/Br)	CU NIPDAU	N / A for Pkg Type		XTR101AP	Samples
XTR101AU	ACTIVE	SOIC	DW	16	40	Green (RoHS & no Sb/Br)	CU NIPDAU	Level-3-260C-168 HR		XTR101AU	Samples
XTR101AU/1K	ACTIVE	SOIC	DW	16	1000	Green (RoHS & no Sb/Br)	CU NIPDAU	Level-3-260C-168 HR		XTR101AU	Samples
XTR101AU/1KG4	ACTIVE	SOIC	DW	16	1000	Green (RoHS & no Sb/Br)	CU NIPDAU	Level-3-260C-168 HR		XTR101AU	Samples
XTR101AUG4	ACTIVE	SOIC	DW	16	40	Green (RoHS & no Sb/Br)	CU NIPDAU	Level-3-260C-168 HR		XTR101AU	Samples
XTR101BG	NRND	CDIP SB	JD	14	1	Green (RoHS & no Sb/Br)	AU	N / A for Pkg Type		XTR101BG	

(1) The marketing status values are defined as follows:
ACTIVE: Product device recommended for new designs.
LIFEBUY: TI has announced that the device will be discontinued, and a lifetime-buy period is in effect.
NRND: Not recommended for new designs. Device is in production to support existing customers, but TI does not recommend using this part in a new design.
PREVIEW: Device has been announced but is not in production. Samples may or may not be available.
OBSOLETE: TI has discontinued the production of the device.

(2) Eco Plan - The planned eco-friendly classification: Pb-Free (RoHS), Pb-Free (RoHS Exempt), or Green (RoHS & no Sb/Br) - please check http://www.ti.com/productcontent for the latest availability information and additional product content details.
TBD: The Pb-Free/Green conversion plan has not been defined.
Pb-Free (RoHS): TI's terms "Lead-Free" or "Pb-Free" mean semiconductor products that are compatible with the current RoHS requirements for all 6 substances, including the requirement that lead not exceed 0.1% by weight in homogeneous materials. Where designed to be soldered at high temperatures, TI Pb-Free products are suitable for use in specified lead-free processes.
Pb-Free (RoHS Exempt): This component has a RoHS exemption for either 1) lead-based flip-chip solder bumps used between the die and package, or 2) lead-based die adhesive used between the die and leadframe. The component is otherwise considered Pb-Free (RoHS compatible) as defined above.
Green (RoHS & no Sb/Br): TI defines "Green" to mean Pb-Free (RoHS compatible), and free of Bromine (Br) and Antimony (Sb) based flame retardants (Br or Sb do not exceed 0.1% by weight in homogeneous material)

(3) MSL, Peak Temp. -- The Moisture Sensitivity Level rating according to the JEDEC industry standard classifications, and peak solder temperature.

(4) Only one of markings shown within the brackets will appear on the physical device.

Important Information and Disclaimer: The information provided on this page represents TI's knowledge and belief as of the date that it is provided. TI bases its knowledge and belief on information provided by third parties, and makes no representation or warranty as to the accuracy of such information. Efforts are underway to better integrate information from third parties. TI has taken and continues to take reasonable steps to provide representative and accurate information but may not have conducted destructive testing or chemical analysis on incoming materials and chemicals. TI and TI suppliers consider certain information to be proprietary, and thus CAS numbers and other limited information may not be available for release.

In no event shall TI's liability arising out of such information exceed the total purchase price of the TI part(s) at issue in this document sold by TI to Customer on an annual basis.

TAPE AND REEL INFORMATION

REEL DIMENSIONS

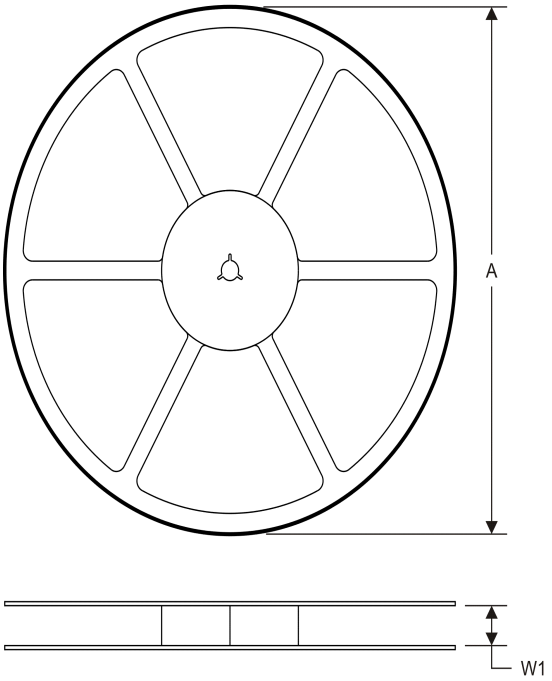

TAPE DIMENSIONS

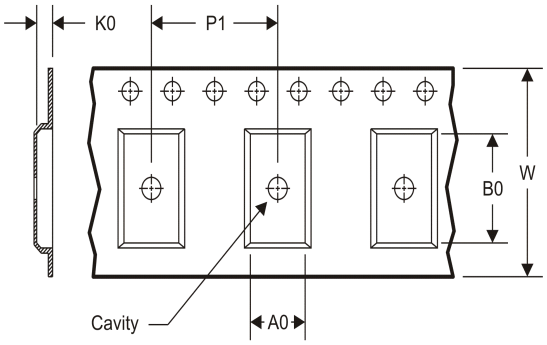

A0	Dimension designed to accommodate the component width
B0	Dimension designed to accommodate the component length
K0	Dimension designed to accommodate the component thickness
W	Overall width of the carrier tape
P1	Pitch between successive cavity centers

TAPE AND REEL INFORMATION

*All dimensions are nominal

Device	Package Type	Package Drawing	Pins	SPQ	Reel Diameter (mm)	Reel Width W1 (mm)	A0 (mm)	B0 (mm)	K0 (mm)	P1 (mm)	W (mm)	Pin1 Quadrant
XTR101AU/1K	SOIC	DW	16	1000	330.0	16.4	10.75	10.7	2.7	12.0	16.0	Q1

TAPE AND REEL BOX DIMENSIONS

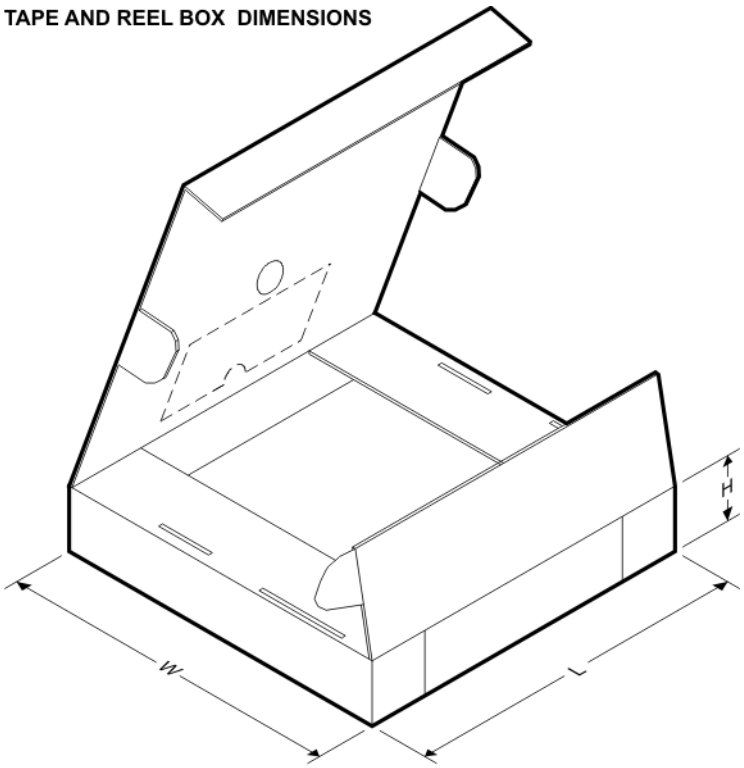

*All dimensions are nominal

Device	Package Type	Package Drawing	Pins	SPQ	Length (mm)	Width (mm)	Height (mm)
XTR101AU/1K	SOIC	DW	16	1000	367.0	367.0	38.0

JD (R–CDIP–T14) CERAMIC SIDE–BRAZE DUAL–IN–LINE

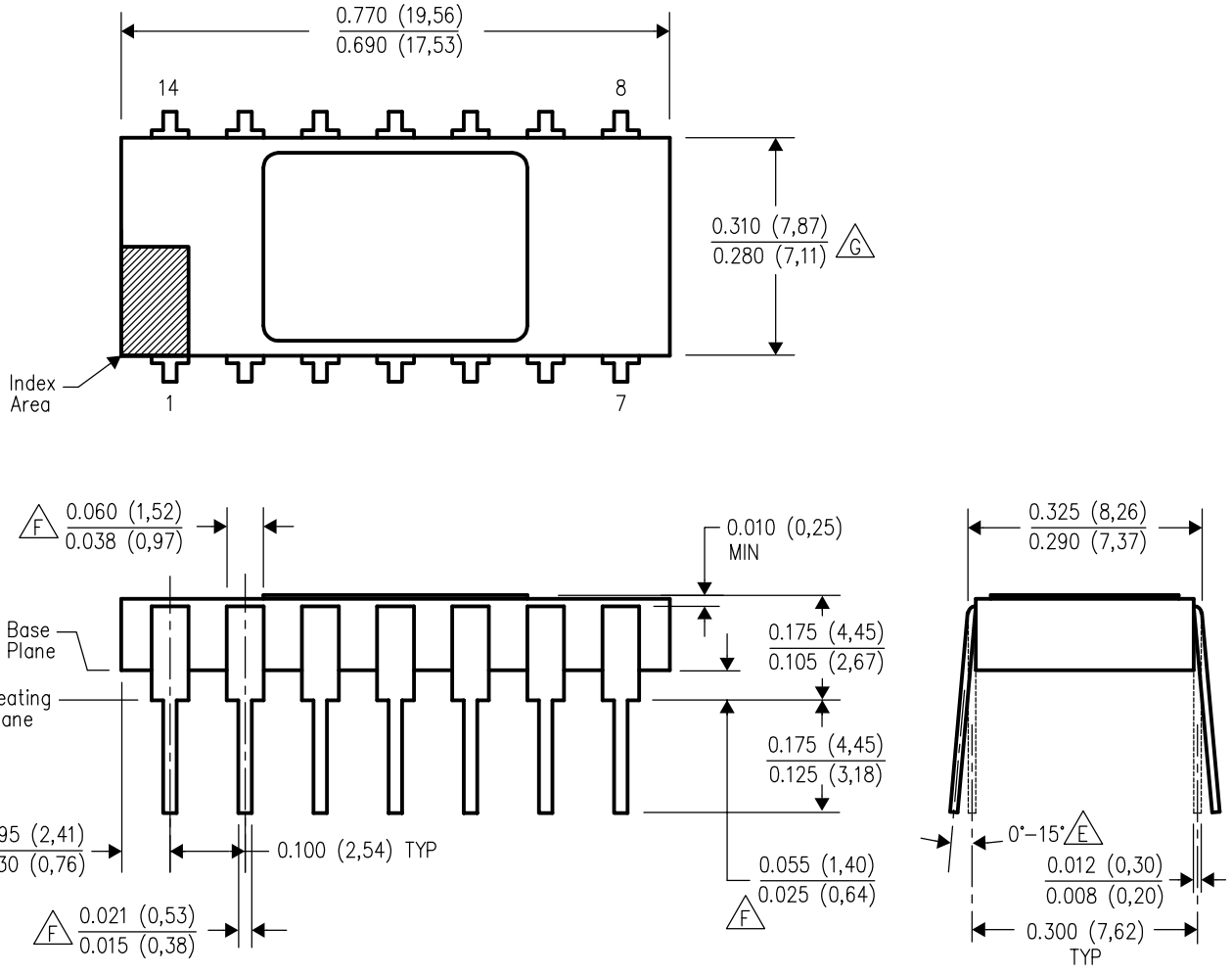

NOTES:
- A. All linear dimensions are in inches (millimeters).
- B. This drawing is subject to change without notice.
- C. Controlling dimension: inch.
- D. Leads within 0.005 (0,13) radius of true position (TP) at gage plane with maximum material condition and unit installed.
- E Angle applies to spread leads prior to installation.
- F Outlines on which the seating plane is coincident with the plane (standoff = 0), terminals lead standoffs are not required, and lead shoulder may equal lead width along any part of the lead above the seating/base plane.
- G Body width does not include particles of packing materials.
- H. A visual index feature must be located within the cross–hatched area.

N (R–PDIP–T**)

PLASTIC DUAL–IN–LINE PACKAGE

16 PINS SHOWN

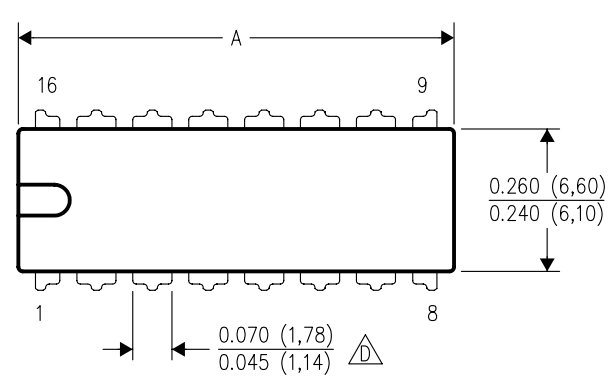

DIM \ PINS **	14	16	18	20
A MAX	0.775 (19,69)	0.775 (19,69)	0.920 (23,37)	1.060 (26,92)
A MIN	0.745 (18,92)	0.745 (18,92)	0.850 (21,59)	0.940 (23,88)
MS–001 VARIATION (C)	AA	BB	AC	AD

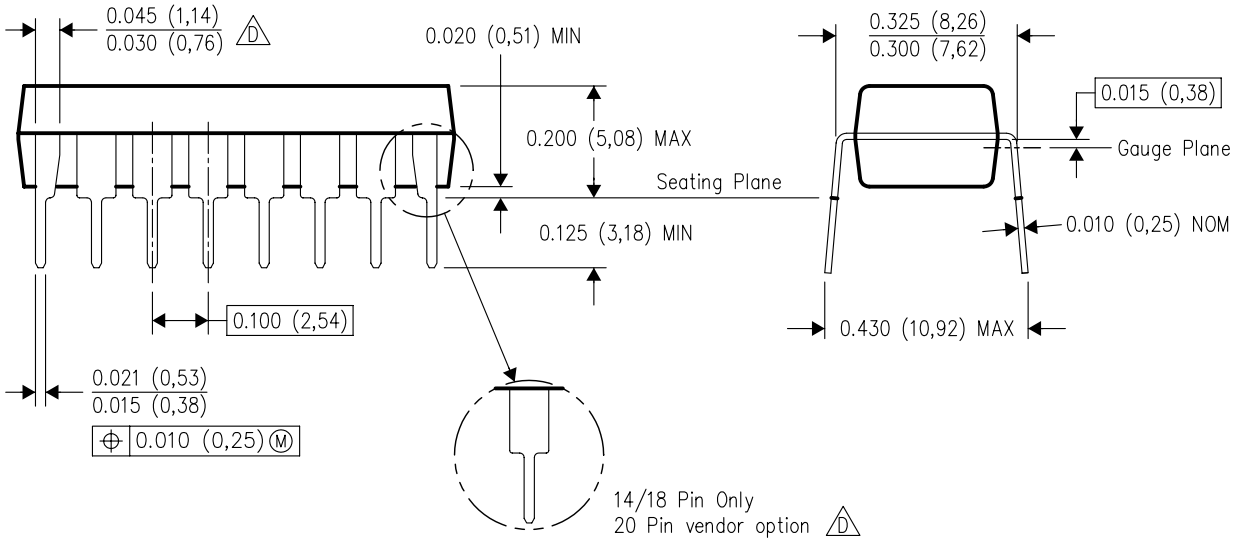

4040049/E 12/2002

NOTES:
A. All linear dimensions are in inches (millimeters).
B. This drawing is subject to change without notice.
C. Falls within JEDEC MS–001, except 18 and 20 pin minimum body length (Dim A).
D. The 20 pin end lead shoulder width is a vendor option, either half or full width.

DW (R–PDSO–G16) PLASTIC SMALL OUTLINE

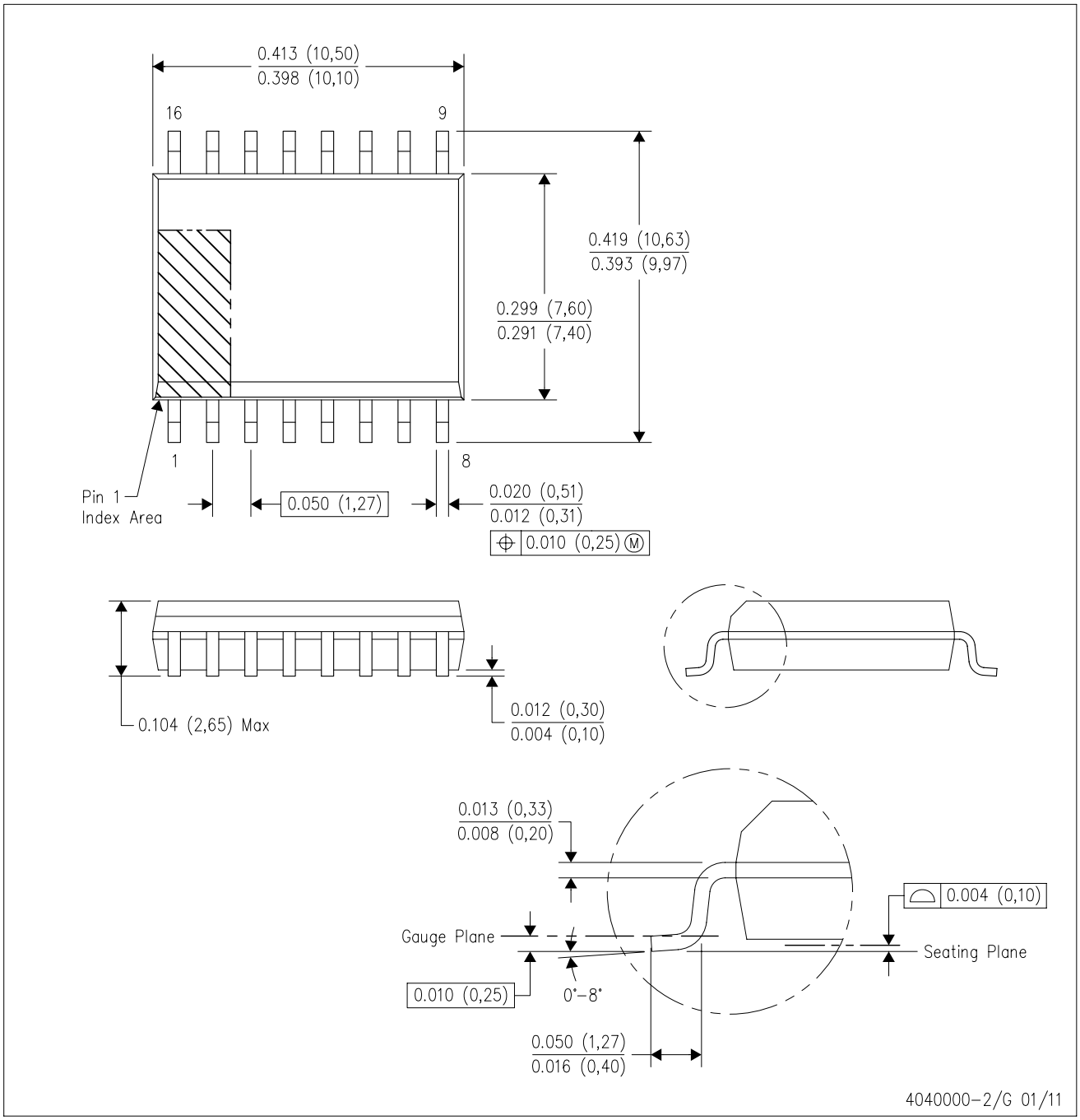

NOTES:
A. All linear dimensions are in inches (millimeters). Dimensioning and tolerancing per ASME Y14.5M–1994.
B. This drawing is subject to change without notice.
C. Body dimensions do not include mold flash or protrusion not to exceed 0.006 (0,15).
D. Falls within JEDEC MS–013 variation AA.

DW (R–PDSO–G16) PLASTIC SMALL OUTLINE

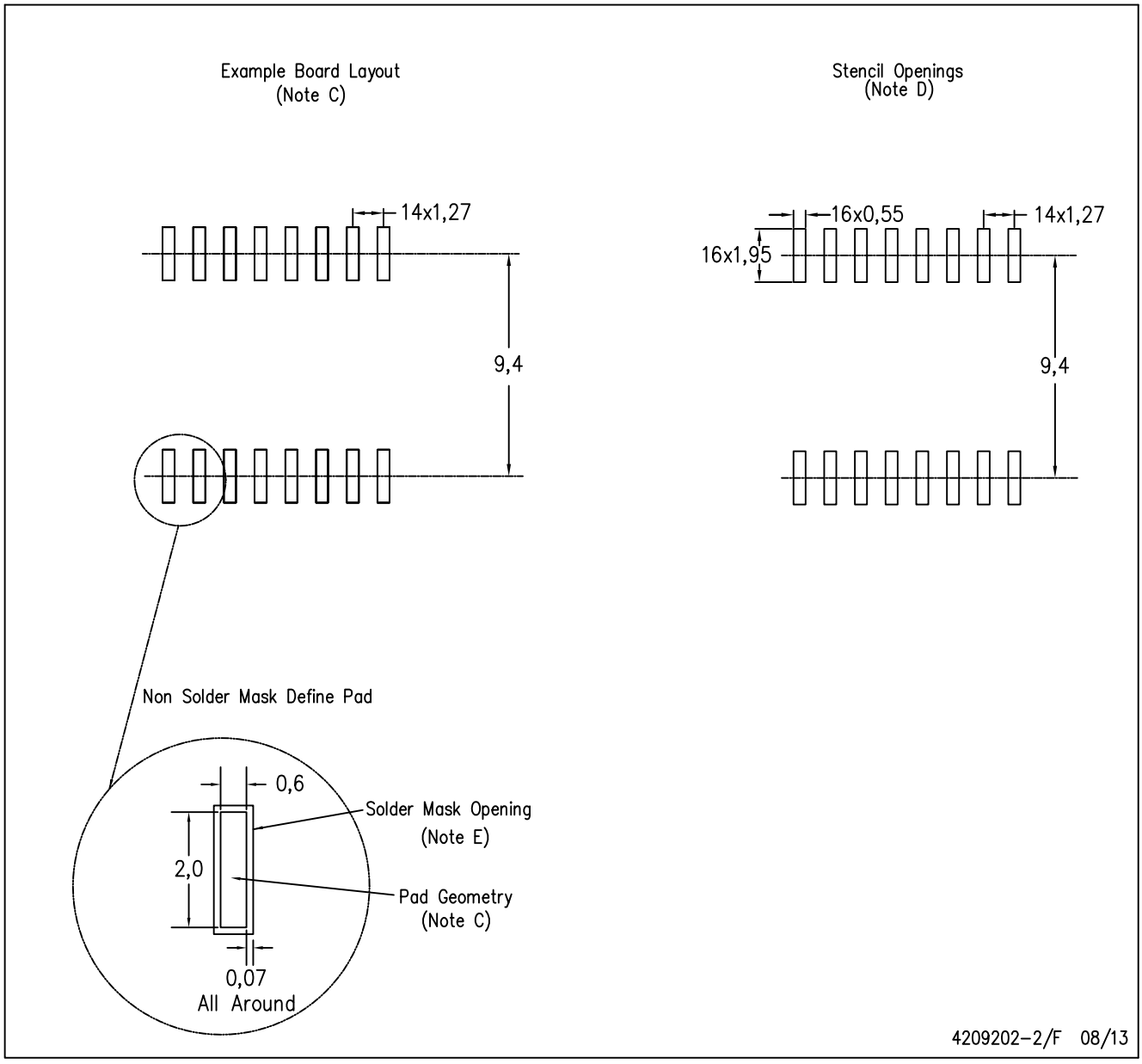

NOTES:
A. All linear dimensions are in millimeters.
B. This drawing is subject to change without notice.
C. Refer to IPC7351 for alternate board design.
D. Laser cutting apertures with trapezoidal walls and also rounding corners will offer better paste release. Customers should contact their board assembly site for stencil design recommendations. Refer to IPC–7525
E. Customers should contact their board fabrication site for solder mask tolerances between and around signal pads.

IMPORTANT NOTICE

Texas Instruments Incorporated and its subsidiaries (TI) reserve the right to make corrections, enhancements, improvements and other changes to its semiconductor products and services per JESD46, latest issue, and to discontinue any product or service per JESD48, latest issue. Buyers should obtain the latest relevant information before placing orders and should verify that such information is current and complete. All semiconductor products (also referred to herein as “components”) are sold subject to TI’s terms and conditions of sale supplied at the time of order acknowledgment.

TI warrants performance of its components to the specifications applicable at the time of sale, in accordance with the warranty in TI’s terms and conditions of sale of semiconductor products. Testing and other quality control techniques are used to the extent TI deems necessary to support this warranty. Except where mandated by applicable law, testing of all parameters of each component is not necessarily performed.

TI assumes no liability for applications assistance or the design of Buyers’ products. Buyers are responsible for their products and applications using TI components. To minimize the risks associated with Buyers’ products and applications, Buyers should provide adequate design and operating safeguards.

TI does not warrant or represent that any license, either express or implied, is granted under any patent right, copyright, mask work right, or other intellectual property right relating to any combination, machine, or process in which TI components or services are used. Information published by TI regarding third-party products or services does not constitute a license to use such products or services or a warranty or endorsement thereof. Use of such information may require a license from a third party under the patents or other intellectual property of the third party, or a license from TI under the patents or other intellectual property of TI.

Reproduction of significant portions of TI information in TI data books or data sheets is permissible only if reproduction is without alteration and is accompanied by all associated warranties, conditions, limitations, and notices. TI is not responsible or liable for such altered documentation. Information of third parties may be subject to additional restrictions.

Resale of TI components or services with statements different from or beyond the parameters stated by TI for that component or service voids all express and any implied warranties for the associated TI component or service and is an unfair and deceptive business practice. TI is not responsible or liable for any such statements.

Buyer acknowledges and agrees that it is solely responsible for compliance with all legal, regulatory and safety-related requirements concerning its products, and any use of TI components in its applications, notwithstanding any applications-related information or support that may be provided by TI. Buyer represents and agrees that it has all the necessary expertise to create and implement safeguards which anticipate dangerous consequences of failures, monitor failures and their consequences, lessen the likelihood of failures that might cause harm and take appropriate remedial actions. Buyer will fully indemnify TI and its representatives against any damages arising out of the use of any TI components in safety-critical applications.

In some cases, TI components may be promoted specifically to facilitate safety-related applications. With such components, TI’s goal is to help enable customers to design and create their own end-product solutions that meet applicable functional safety standards and requirements. Nonetheless, such components are subject to these terms.

No TI components are authorized for use in FDA Class III (or similar life-critical medical equipment) unless authorized officers of the parties have executed a special agreement specifically governing such use.

Only those TI components which TI has specifically designated as military grade or “enhanced plastic” are designed and intended for use in military/aerospace applications or environments. Buyer acknowledges and agrees that any military or aerospace use of TI components which have ***not*** been so designated is solely at the Buyer's risk, and that Buyer is solely responsible for compliance with all legal and regulatory requirements in connection with such use.

TI has specifically designated certain components as meeting ISO/TS16949 requirements, mainly for automotive use. In any case of use of non-designated products, TI will not be responsible for any failure to meet ISO/TS16949.

Products		**Applications**	
Audio	www.ti.com/audio	Automotive and Transportation	www.ti.com/automotive
Amplifiers	amplifier.ti.com	Communications and Telecom	www.ti.com/communications
Data Converters	dataconverter.ti.com	Computers and Peripherals	www.ti.com/computers
DLP® Products	www.dlp.com	Consumer Electronics	www.ti.com/consumer-apps
DSP	dsp.ti.com	Energy and Lighting	www.ti.com/energy
Clocks and Timers	www.ti.com/clocks	Industrial	www.ti.com/industrial
Interface	interface.ti.com	Medical	www.ti.com/medical
Logic	logic.ti.com	Security	www.ti.com/security
Power Mgmt	power.ti.com	Space, Avionics and Defense	www.ti.com/space-avionics-defense
Microcontrollers	microcontroller.ti.com	Video and Imaging	www.ti.com/video
RFID	www.ti-rfid.com		
OMAP Applications Processors	www.ti.com/omap	**TI E2E Community**	e2e.ti.com
Wireless Connectivity	www.ti.com/wirelessconnectivity		

Mailing Address: Texas Instruments, Post Office Box 655303, Dallas, Texas 75265
Copyright © 2015, Texas Instruments Incorporated