18.0-25.0 GHz GaAs MMIC Receiver

May 2005 - Rev 13-May-05

R1006

Features

- Sub-harmonic Receiver
- Integrated LNA, LO Buffer, Image Reject Mixer
- +2.0 dBm LO Drive Level
- 2.5 dB Noise Figure
- 15.0 dB Image Rejection
- 100% On-Wafer RF, DC and Noise Figure Testing
- 100% Visual Inspection to MIL-STD-883 Method 2010

General Description

Mimix Broadband's 18.0-25.0 GHz GaAs MMIC receiver has a noise figure of 2.5 dB and 15.0 dB image rejection across the band. This device is a two stage balanced LNA followed by an image reject sub-harmonic anti-parallel diode mixer and includes an integrated LO buffer amplifer. The image reject mixer eliminates the need for a bandpass filter after the LNA to remove thermal noise at the image frequency. The use of a sub-harmonic mixer makes the provision of the LO easier than for fundamental mixers at these frequencies. I and Q mixer outputs are provided and an external 90 degree hybrid is required to select the desired sideband. This MMIC uses Mimix Broadband's 0.15 μm GaAs PHEMT device model technology, and is based upon electron beam lithography to ensure high repeatability and uniformity. The chip has surface passivation to protect and provide a rugged part with backside via holes and gold metallization to allow either a conductive epoxy or eutectic solder die attach process. This device is well suited for Millimeter-wave Point-to-Point Radio, LMDS, SATCOM and VSAT applications.

Chip Device Layout

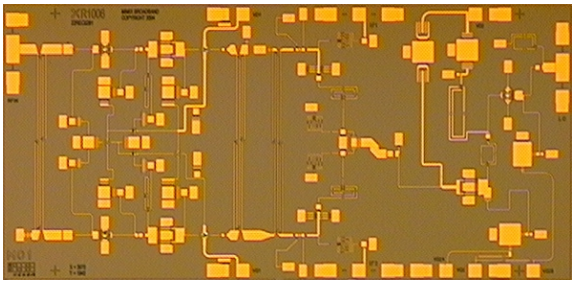

Absolute Maximum Ratings

Supply Voltage (Vd)	+4.5 VDC
Supply Current (Id1,Id2)	180, 165 mA
Gate Bias Voltage (Vg)	+0.3 VDC
Input Power (RF Pin)	0.0 dBm
Storage Temperature (Tstg)	-65 to +165 ^{O}C
Operating Temperature (Ta)	-55 to MTTF Table[3]
Channel Temperature (Tch)	MTTF Table[3]

(3) Channel temperature affects a device's MTTF. It is recommended to keep channel temperature as low as possible for maximum life.

Electrical Characteristics (Ambient Temperature T = 25° C)

Parameter	Units	Min.	Typ.	Max.
Frequency Range (RF) Upper Side Band	GHz	18.0	-	25.0
Frequency Range (RF) Lower Side Band	GHz	18.0	-	21.0
Frequency Range (LO)	GHz	7.5	-	11.5
Frequency Range (IF)	GHz	DC	-	3.0
Input Return Loss RF (S11)	dB	-	12.0	-
Small Signal Conversion Gain RF/IF (S21) [2]	dB	-	8.0	-
LO Input Drive (P_{LO})	dBm	-	+2.0	-
Image Rejection [2]	dBc	-	15.0	-
Noise Figure (NF) [2]	dB	-	2.5	-
Isolation LO/RF @ LOx1/LOx2	dB	-	50.0/60.0	-
Input Third Order Intercept (IIP3) [1,2]	dBm	-	-7.0	-
Drain Bias Voltage (Vd1)	VDC	-	+3.5	+4.5
Drain Bias Voltage (Vd2)	VDC	-	+4.0	+4.5
Gate Bias Voltage (Vg1,2)	VDC	-1.2	-0.3	+0.1
Supply Current (Id1) (Vd1=3.5V, Vg=-0.3V Typical)	mA	-	130	155
Supply Current (Id2) (Vd2=4.0V, Vg=-0.3V Typical)	mA	-	116	140

(1) Measured using constant current.
(2) Measured using LO Input drive level of +2.0 dBm.

Mimix Broadband, Inc., 10795 Rockley Rd., Houston, Texas 77099
Tel: 281.988.4600 Fax: 281.988.4615 mimixbroadband.com

Characteristic Data and Specifications are subject to change without notice. ©2005 Mimix Broadband, Inc.
Export of this item may require appropriate export licensing from the U.S. Government. In purchasing these parts, U.S. Domestic customers accept their obligation to be compliant with U.S. Export Laws.

Receiver Measurements

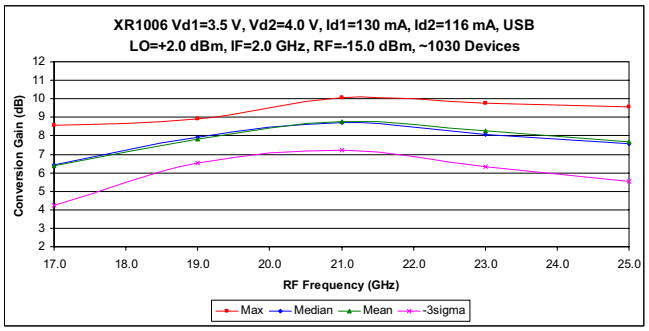

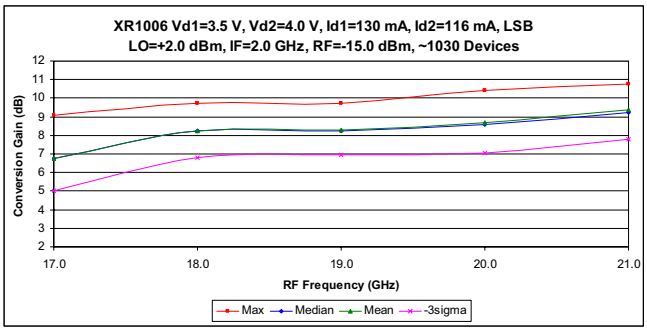

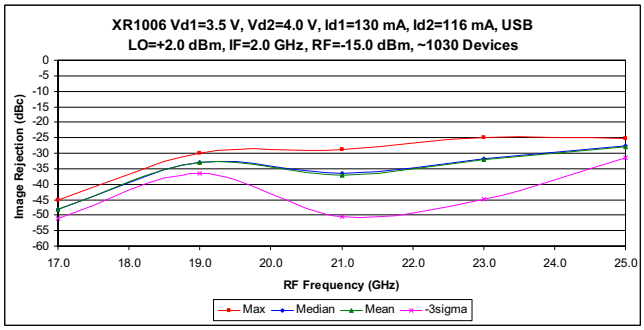

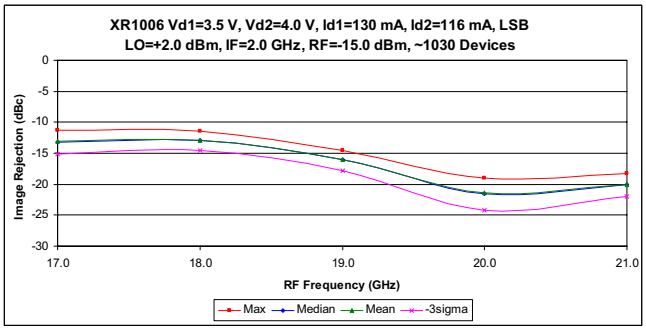

Characteristic Data and Specifications are subject to change without notice. ©2005 Mimix Broadband, Inc.
Export of this item may require appropriate export licensing from the U.S. Government. In purchasing these parts, U.S. Domestic customers accept their obligation to be compliant with U.S. Export Laws.

Mechanical Drawing

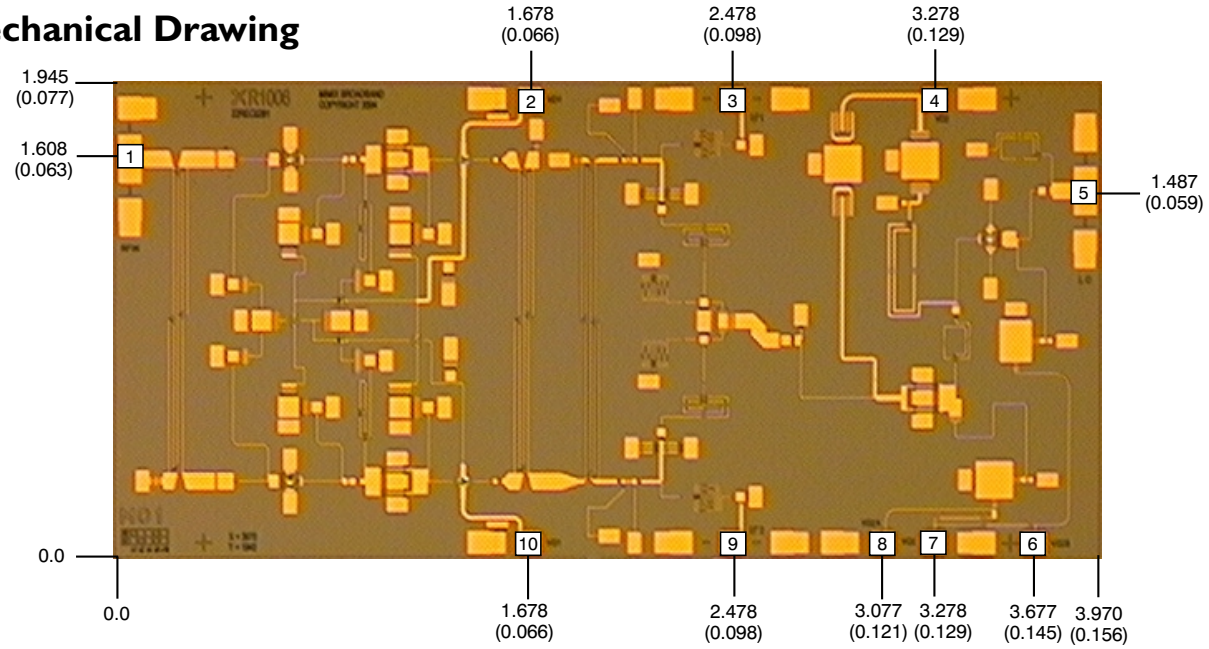

(Note: Engineering designator is 22REC0281)

Units: millimeters (inches) Bond pad dimensions are shown to center of bond pad.
Thickness: 0.110 +/- 0.010 (0.0043 +/- 0.0004), Backside is ground, Bond Pad/Backside Metallization: Gold
All DC/IF Bond Pads are 0.100 x 0.100 (0.004 x 0.004). All RF Bond Pads are 0.100 x 0.200 (0.004 x 0.008)
Bond pad centers are approximately 0.109 (0.004) from the edge of the chip.
Dicing tolerance: +/- 0.005 (+/- 0.0002). Approximate weight: 4.787 mg.

Bond Pad #1 (RF In)	Bond Pad #3 (IF1)	Bond Pad #5 (LO)	Bond Pad #7 (Vg2)	Bond Pad #9 (IF2)
Bond Pad #2 (Vd1)	Bond Pad #4 (Vd2)	Bond Pad #6 (Vg2b)	Bond Pad #8 (Vg2a)	Bond Pad #10 (Vg1)

Bias Arrangement

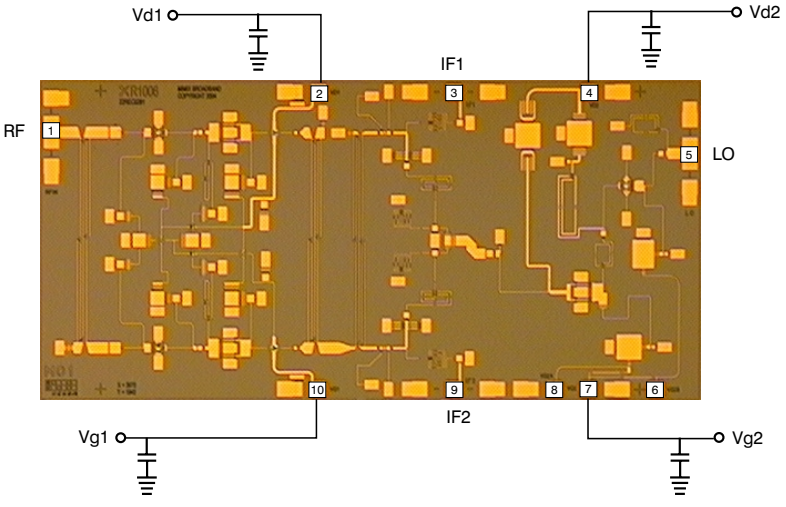

Bypass Capacitors - See App Note [2]

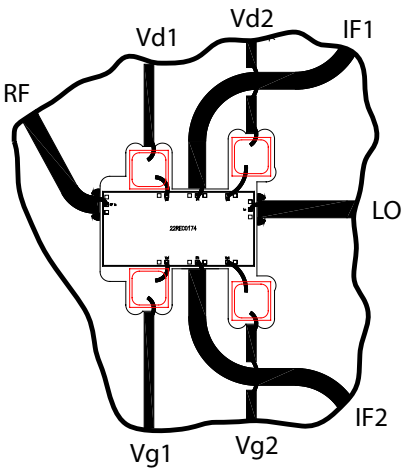

Mimix Broadband, Inc., 10795 Rockley Rd., Houston, Texas 77099
Tel: 281.988.4600 Fax: 281.988.4615 mimixbroadband.com

Characteristic Data and Specifications are subject to change without notice. ©2005 Mimix Broadband, Inc.
Export of this item may require appropriate export licensing from the U.S. Government. In purchasing these parts, U.S. Domestic customers accept their obligation to be compliant with U.S. Export Laws.

App Note [1] Biasing - As shown in the bonding diagram, this device is operated by separately biasing Vd1 and Vd2 with Vd1=3.5V, Id1=130mA and Vd2=4.0V, Id2=116mA. It is also recommended to use active biasing to keep the currents constant as the RF power and temperature vary; this gives the most reproducible results. Depending on the supply voltage available and the power dissipation constraints, the bias circuit may be a single transistor or a low power operational amplifier, with a low value resistor in series with the drain supply used to sense the current. The gate of the pHEMT is controlled to maintain correct drain current and thus drain voltage. The typical gate voltage needed to do this is -0.3V. Typically the gate is protected with Silicon diodes to limit the applied voltage. Also, make sure to sequence the applied voltage to ensure negative gate bias is available before applying the positive drain supply.

App Note [2] Bias Arrangement - Each DC pad (Vd1,2 and Vg1,2) needs to have DC bypass capacitance (~100-200 pF) as close to the device as possible. Additional DC bypass capacitance (~0.01 uF) is also recommended.

MTTF Table (TBD)

These numbers were calculated based on accelerated life test information and thermal model analysis received from the fabricating foundry.

Backplate Temperature	Channel Temperature	Rth	MTTF Hours	FITs
55 deg Celsius	deg Celsius	C/W	E+	E+
75 deg Celsius	deg Celsius	C/W	E+	E+
95 deg Celsius	deg Celsius	C/W	E+	E+

Bias Conditions: Vd1=3.5V, Vd2=4.0V, Id1=130 mA, Id2=116 mA

Typical Application

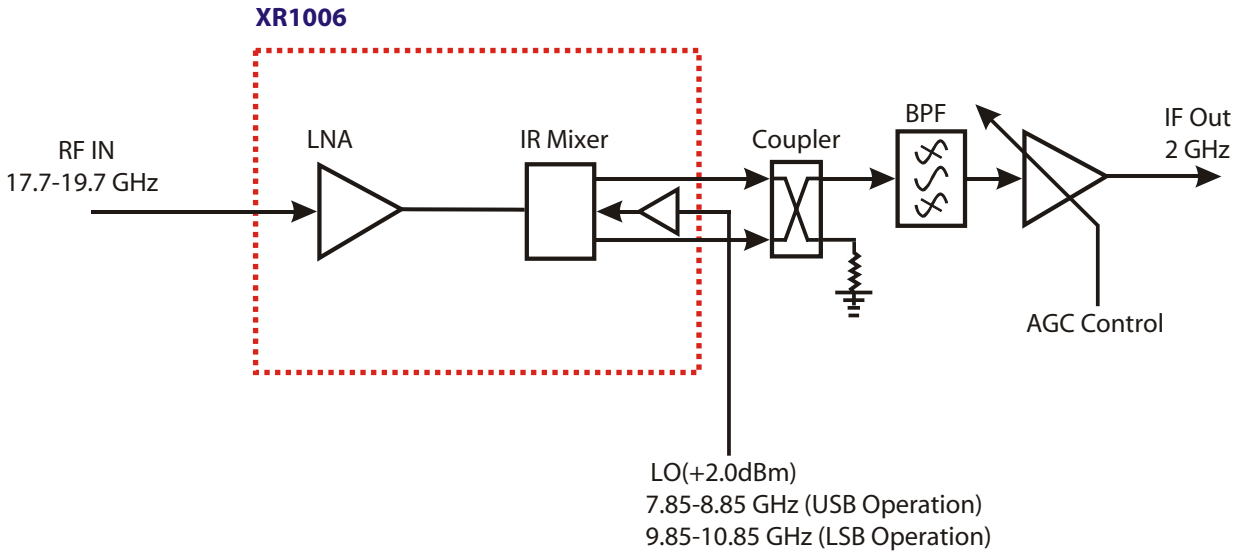

Mimix Broadband MMIC-based 18.0-25.0 GHz Receiver Block Diagram

(Changing LO and IF frequencies as required allows design to operate as high as 25.0 GHz)

Mimix Broadband's 18.0-25.0 GHz XR1006 GaAs MMIC Receiver can be used in saturated radio applications and linear modulation schemes up to 16 QAM. The receiver can be used in upper and lower sideband applications from 18.0-25.0 GHz.

Mimix Broadband, Inc., 10795 Rockley Rd., Houston, Texas 77099
Tel: 281.988.4600 Fax: 281.988.4615 mimixbroadband.com

Characteristic Data and Specifications are subject to change without notice. ©2005 Mimix Broadband, Inc.
Export of this item may require appropriate export licensing from the U.S. Government. In purchasing these parts, U.S. Domestic customers accept their obligation to be compliant with U.S. Export Laws.

App Note [3] USB/LSB Selection -

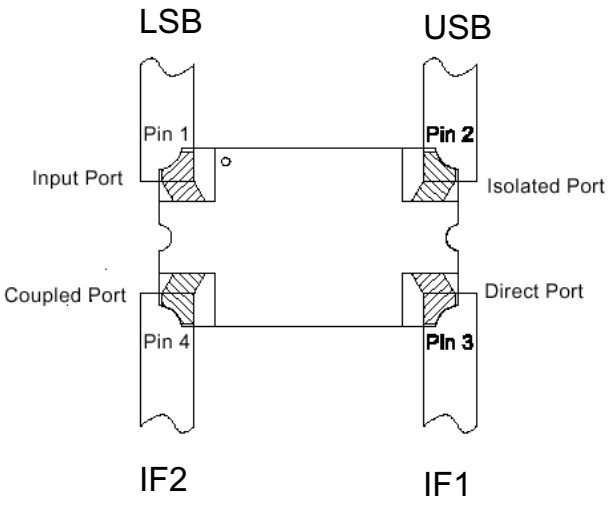

For Upper Side Band operation (USB):

With IF1 and IF2 connected to the direct port (0º) and coupled port (90º) respectively as shown in the diagram, the USB signal will reside on the isolated port. The input port must be loaded with 50 ohms.

For Lower Side Band operation (LSB):

With IF1 and IF2 connected to the direct port (0º) and coupled port (90º) respectively as shown in the diagram, the LSB signal will reside on the input port. The isolated port must be loaded with 50 ohms.

An alternate method of Selection of USB or LSB:

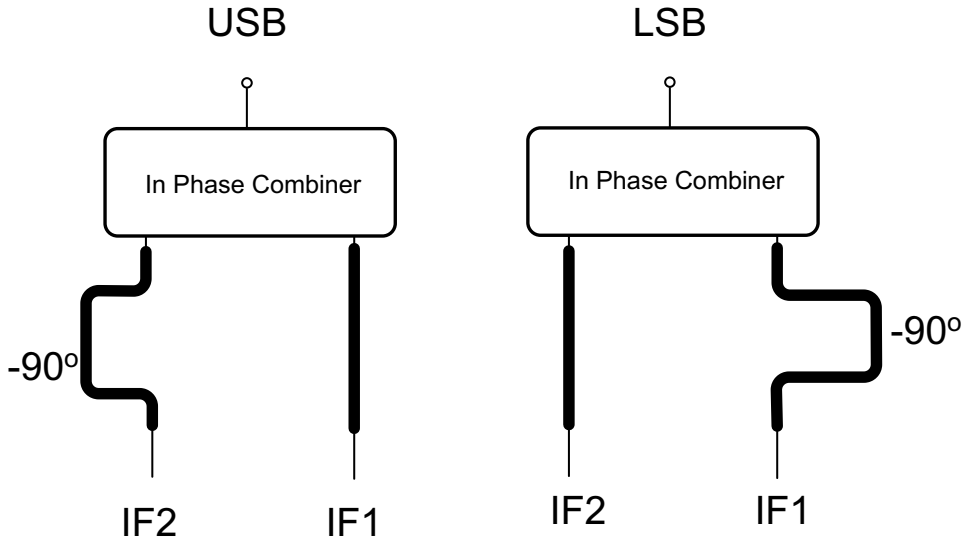

Characteristic Data and Specifications are subject to change without notice. ©2005 Mimix Broadband, Inc.
Export of this item may require appropriate export licensing from the U.S. Government. In purchasing these parts, U.S. Domestic customers accept their obligation to be compliant with U.S. Export Laws.

Device Schematic

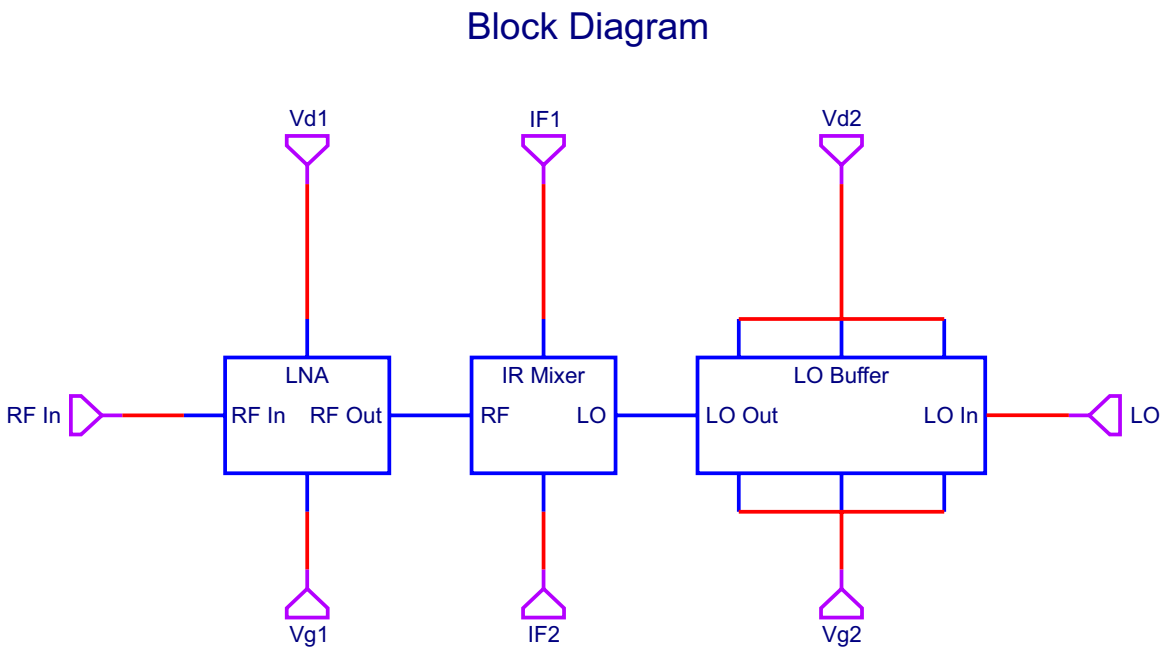

Mimix Broadband, Inc., 10795 Rockley Rd., Houston, Texas 77099
Tel: 281.988.4600 Fax: 281.988.4615 mimixbroadband.com

Characteristic Data and Specifications are subject to change without notice. ©2005 Mimix Broadband, Inc.
Export of this item may require appropriate export licensing from the U.S. Government. In purchasing these parts, U.S. Domestic customers accept their obligation to be compliant with U.S. Export Laws.

Handling and Assembly Information

CAUTION! - Mimix Broadband MMIC Products contain gallium arsenide (GaAs) which can be hazardous to the human body and the environment. For safety, observe the following procedures:

- *Do not ingest.*
- *Do not alter the form of this product into a gas, powder, or liquid through burning, crushing, or chemical processing as these by-products are dangerous to the human body if inhaled, ingested, or swallowed.*
- *Observe government laws and company regulations when discarding this product. This product must be discarded in accordance with methods specified by applicable hazardous waste procedures.*

Life Support Policy - Mimix Broadband's products are not authorized for use as critical components in life support devices or systems without the express written approval of the President and General Counsel of Mimix Broadband. As used herein: (1) Life support devices or systems are devices or systems which, (a) are intended for surgical implant into the body, or (b) support or sustain life, and whose failure to perform when properly used in accordance with instructions for use provided in the labeling, can be reasonably expected to result in a significant injury to the user. (2) A critical component is any component of a life support device or system whose failure to perform can be reasonably expected to cause the failure of the life support device or system, or to affect its safety or effectiveness.

ESD - Gallium Arsenide (GaAs) devices are susceptible to electrostatic and mechanical damage. Die are supplied in antistatic containers, which should be opened in cleanroom conditions at an appropriately grounded anti-static workstation. Devices need careful handling using correctly designed collets, vacuum pickups or, with care, sharp tweezers.

Die Attachment - GaAs Products from Mimix Broadband are 0.100 mm (0.004") thick and have vias through to the backside to enable grounding to the circuit. Microstrip substrates should be brought as close to the die as possible. The mounting surface should be clean and flat. If using conductive epoxy, recommended epoxies are Ablestick 84-1LMI or 84-1LMIT cured in a nitrogen atmosphere per manufacturer's cure schedule. Apply epoxy sparingly to avoid getting any on to the top surface of the die. An epoxy fillet should be visible around the total die periphery. If eutectic mounting is preferred, then a fluxless gold-tin (AuSn) preform, approximately 0.001^2 thick, placed between the die and the attachment surface should be used. A die bonder that utilizes a heated collet and provides scrubbing action to ensure total wetting to prevent void formation in a nitrogen atmosphere is recommended. The gold-tin eutectic (80% Au 20% Sn) has a melting point of approximately 280°C (Note: Gold Germanium should be avoided). The work station temperature should be 310°C ± 10°C. Exposure to these extreme temperatures should be kept to minimum. The collet should be heated, and the die pre-heated to avoid excessive thermal shock. Avoidance of air bridges and force impact are critical during placement.

Wire Bonding - Windows in the surface passivation above the bond pads are provided to allow wire bonding to the die's gold bond pads. The recommended wire bonding procedure uses 0.076 mm x 0.013 mm (0.003" x 0.0005") 99.99% pure gold ribbon with 0.5-2% elongation to minimize RF port bond inductance. Gold 0.025 mm (0.001") diameter wedge or ball bonds are acceptable for DC Bias connections. Aluminum wire should be avoided. Thermo-compression bonding is recommended though thermosonic bonding may be used providing the ultrasonic content of the bond is minimized. Bond force, time and ultrasonics are all critical parameters. Bonds should be made from the bond pads on the die to the package or substrate. All bonds should be as short as possible.

Characteristic Data and Specifications are subject to change without notice. ©2005 Mimix Broadband, Inc.
Export of this item may require appropriate export licensing from the U.S. Government. In purchasing these parts, U.S. Domestic customers accept their obligation to be compliant with U.S. Export Laws.