SHEET OF

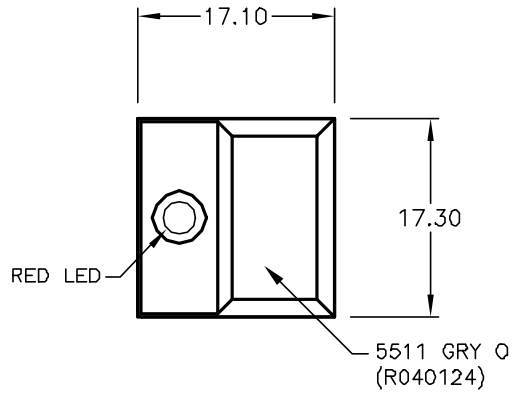

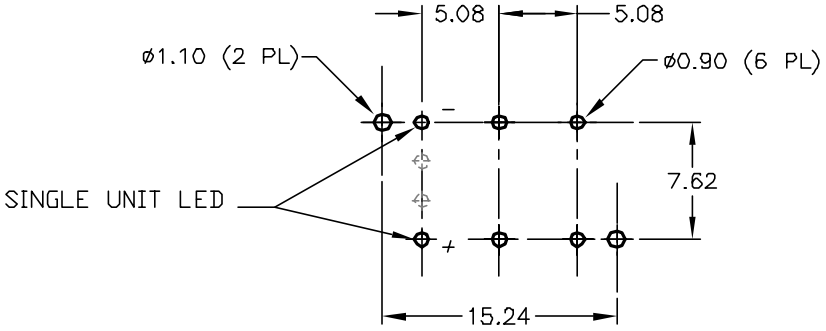

RECOMMENDED P.C.B. LAYOUT

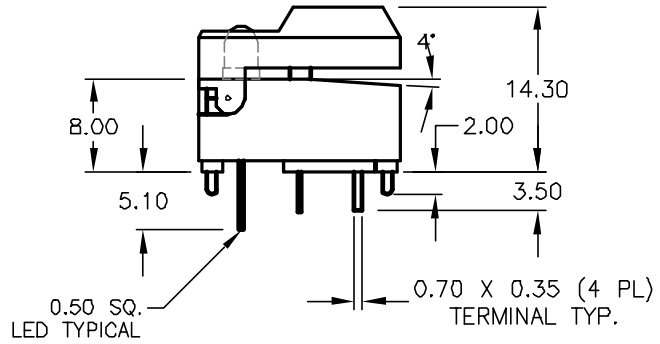

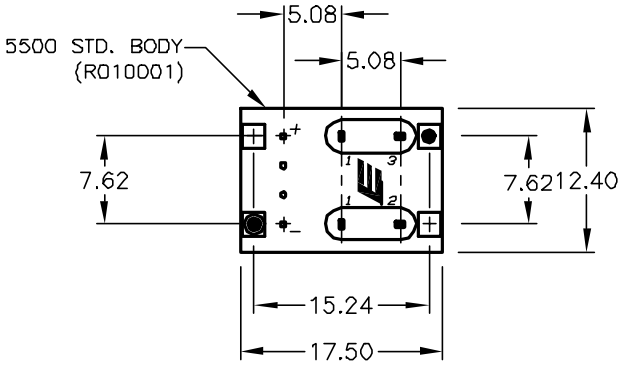

LED SPECIFATION	SYMBOL	RED L.E.D MAX. / MIN.	TYP.	UNITS
POWER DISSIPATION	P_D	80 / --		mW
FORWARD VOLTAGE	V_F	2.8 / 1.9	2.2	V
REVERSE VOLTAGE	V_R	5 /		V
EMISSION WAVELENGTH	λ_P		695	nm
AVE. FORWARD CURRENT	I_{AF}	30 / --		mA
LUMINOUS INTENSITY	I_V	/ 0.7	22	mcd

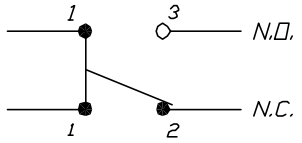

CIRCUIT: SPDT
CONTACT CONFIGURATION

NOTES:

1. ALL DIMENSIONS IN MM
2. GENERAL TOLERANCE: X.X=±0.4
   X.XX=±0.25
3. TERM. NO. FOR REF. ONLY
4. RATING: 12mA @24V
5. FIXED CONTACT/MOVING CONTACT:
   COPPER ALLOY W/GOLD PLATE
6. CONTACT BOUNCE: <5m SEC.
7. CONTACT RESISTANCE: <50milli-OHMS
8. TRAVEL: 2.5±0.2mm

REV.	ECN No.	DESCRIPTION	DATE	CHKD
B	12151	REVISED AND REDRAWN	5/14/02	CJB

THE INFORMATION CONTAINED IN THIS DOCUMENT IS PROPRIETARY TO E-SWITCH AND IS NOT TO BE COPIED OR TRANSFERRED

E-SWITCH®

TITLE: 5511-M-2-1

SCALE	DATE	DR	DWG	REV
1.5:1	5/14/02	CJB	XR0160P	B