XOP90 SERIES
Plastic Encapsulated 14 x 9.8mm SMD Programmable Oscillators

DESCRIPTION

The Euroquartz range of factory programmable oscillators provide custom frequency and specification oscillators within very short lead times. The parts are very reliable in use and have stabilities from ±25ppm over -40° to 85°C. In addition to the stability over operating temperature range customers may also choose from supply voltages of 2.7, 3.3 and 5.0 Volts, Enable/Disable or Power Down functions and output synchronous or asynchronous .

FEATURES

- **Very quick delivery available**
- **Industry-standard 14 x 9.8mm SMD package**
- **Frequency range 1MHz to 133MHz**
- **Supply Voltages 2.7 Volts, 3.3 Volts or 5.0 Volts**
- **Enable/Disable or Power Down options**

OUTLINE & DIMENSIONS

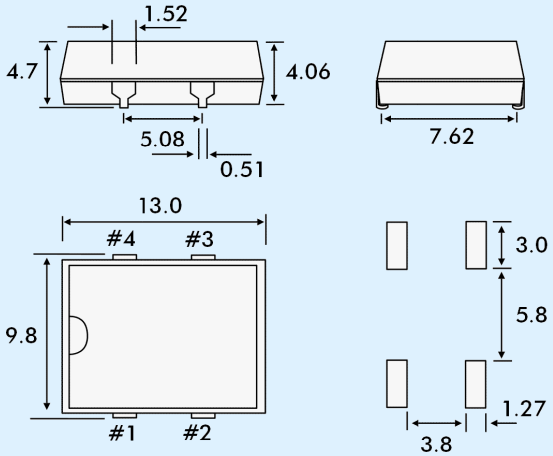

Pad Connections
1 Option
2 Ground
3 Output
4 Vcc

GENERAL SPECIFICATION

Package Type:	Plastic (Resin)encapsulated	
Frequency Range		
5.0 Volt Supply:	1.0MHz to 133.0MHz	
3.3 Volt Supply:	1.0MHz to 100.0MHz	
2.7 Volt Supply:	1.0MHz to 100.0MHz	
Frequency Stability*:	±25ppm to ±100ppm **(over operating temperature range)**	
Operating Temperature Range		
Choice of three ranges:	0° ~ +70°C	Part code: 'C'
	-20° ~ +70°C	Part code: 'D'
	-40° ~ +85°C	Part code: 'I'
Storage Temperature Range:	-55° to +125°C	
Ageing:	±5ppm/year maximum **(Ta=25°C, Vdd=2.7V, 3.3V or 5.0V)**	
Packaging:	Bulk pack or tubed	
Output Levels:	TTL or CMOS	
Maximum Output Loads		
<40MHz:	30pF **(See note opposite)**	
>40MHz:	15pF **(See note opposite)**	
Duty Cycle		
CMOS <40MHz:	45/55% maximum	
CMOS >40MHz:	40/60% maximum	
Output Clock Rise/Fall Times:	4ns maximum	
Power Supply Current:	25mA **(unloaded)**	
Standby Current:	10mA typical 50mA maximum	
Start-up Time:	10ms maximum **(from power-on)**	
Power Down Delay Time		
Synchronous:	T/2ns typical, T+10ns maximum	
Asynchronous:	10ns typical, 15ns maximum	
Output Disable Time		
Synchronous:	T/2ns typical, T+10ns maximum	
Asynchronous:	10ns typical, 15ns maximum **(T = frequency period)**	
Output Enable Time:	100ns maximum	
RMS Jitter		
1MHz~33MHz:	±50ps maximum	
33MHz~133MHz:	±40ps maximum	

*** The frequency stability parameter is an inclusive figure and includes adjustment tolerance at 25°C, stability over operating temperature range, variations due to load change ±10%, supply voltage change ±10%, first year ageing, shock and vibration.**

OPERATING LOAD CONDITIONS

Maximum Capacitive Load TTL

5.0 Volt Supply

1.0MHz ~ 40MHz:	50pF
40.1MHz ~ 133MHz:	25pF

Maximum Capacitive Load CMOS

5.0 Volt Supply

1.0MHz ~ 66MHz:	50pF
66.1MHz ~ 133MHz:	25pF

3.3 Volt/2.7 Volt Supply

1.0MHz ~ 40MHz:	30pF
40.1MHz ~ 100MHz:	15pF

PRODUCT SELECTION

Model Number	Frequency Stability (ppm)	Operating Temperature Range
XOPL90100UC	±100	0°~+70°
XOPL90050UC	±50	0°~+70°
XOPL90025UC	±25	0°~+70°
XOPL90100UD	±100	-20°~+70°
XOPL90050UD	±50	-20°~+70°
XOPL90025UD	±25	-20°~+70°
XOPL90100UI	±100	-40°~+85°
XOPL90050UI	±50	-40°~+85°
XOPL90025UI	±25	-40°~+85°

PART NUMBER GENERATION

Frequency	Model No.	Supply Voltage	Output Option
Nominal Frequency (MHz)	See table above	Blank = 5.0 Volts A = 3.3 Volts B = 2.7 Volts	T = Tristate (Enable/Disable P = Power Down

EXAMPLE: 24.8920MHz XOP90050UDTA

Frequency = 24.8920MHz, XOP90 package, ±50ppm -20°~+70°C, Tristate, supply voltage 3.3 Volts

SYNCHRONOUS/ASYNCHRONOUS

By default oscillators with Enable/Disable or Power Down functions are supplied ASYNCHRONOUS. If SYNCHRONOUS operation is required append '**SYNC**' to the part number

EUROQUARTZ LIMITED Blacknell Lane CREWKERNE Somerset UK TA18 7HE
Tel: +44 1460 230000 Fax: +44 1460 230001 email: info@euroquartz.co.uk web: www.euroquartz.co.uk