Half Size Clock Oscillator Enable/Disable



The XO-52 series oscillator is half size, has tri-state enable/disable controlled function. The metal package with pin 4 case ground acts as shielding to minimize EMI radiation.

FEATURES

- Size: 8 pin half size
- Industry standard
- Tri-state enable/disable
- Wide frequency range
- Low cost
- Resistance weld package
- 5 V
- Compliant to RoHS Directive 2002/95/EC
- Halogen-free according to IEC 61249-2-21 definition

RoHS COMPLIANT
HALOGEN FREE

STANDARD ELECTRICAL SPECIFICATIONS

PARAMETER	SYMBOL	CONDITION	VALUE
Frequency range	F_O	-	1.000 MHz to 100.000 MHz
Frequency stability (1)		all conditions	± 25 ppm, ± 50 ppm, ± 100 ppm
Operating temperature range	T_{OPR}	-	0 °C to 70 °C
			- 40 °C to + 85 °C (option)
Storage temperature range	T_{STG}	-	- 55 °C to + 125 °C
Power supply voltage	V_{DD}	-	5.0 V ± 10 %
Aging (first year)		25 °C ± 3 °C	± 5 ppm
Supply current	I_{DD}	1.000 MHz to 23.999 MHz	20 mA max.
		24.000 MHz to 49.999 MHz	30 mA max.
		50.000 MHz to 69.999 MHz	40 mA max.
		70.000 MHz to 100.000 MHz	60 mA max.
Output symmetry	Sym	at $^1/_2$ V_{DD}	40 %/60 % (45 %/55 % option)
Rise time	t_r	20 % V_{DD} to 80 % V_{DD}	10 ns max.
Fall time	t_f	80 % V_{DD} to 20 % V_{DD}	10 ns max.
Output voltage	V_{OH}	-	90 % V_{DD} min.
	V_{OL}	-	10 % V_{DD} max.
Output load	TTL load	-	1 TTL to 10 TTL
	HCMOS load	-	to 50M: 50 pF
		-	to 70M: 30 pF
		-	to 100M: 15 pF
Start-up time	t_s	-	10 ms max.
Pin 1, tri-state function		-	pin 1 = H or open (output active at pin 5) pin 1 = L (high impedance at pin 5)

Note

(1) Include: 25 °C tolerance, operating temperature range, input voltage change, aging, load change, shock vibration

DIMENSIONS in inches [millimeters]

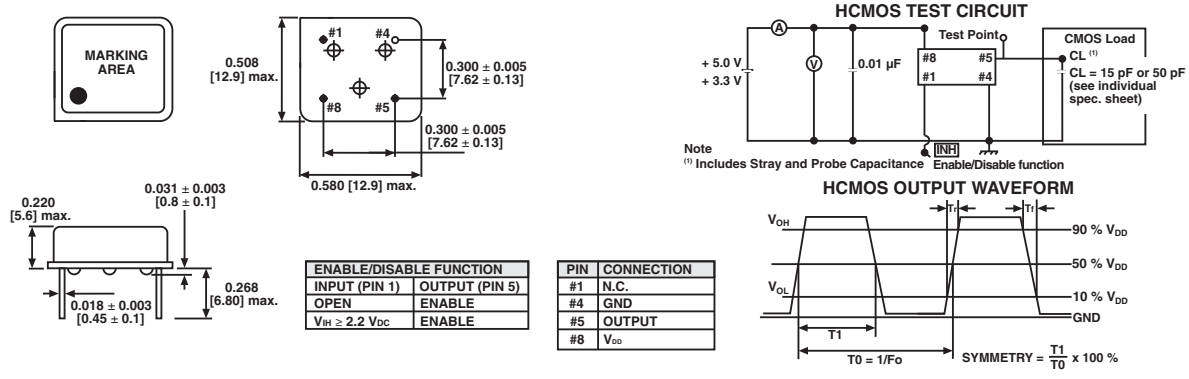

ENABLE/DISABLE FUNCTION	
INPUT (PIN 1)	OUTPUT (PIN 5)
OPEN	ENABLE
$V_{IH} \geq 2.2$ V_{DC}	ENABLE

PIN	CONNECTION
#1	N.C.
#4	GND
#5	OUTPUT
#8	V_{DD}

ORDERING INFORMATION

XO-52	B	R	E	40M	e2
MODEL	FREQUENCY STABILITY	OTR	ENABLE/DISABLE	FREQUENCY/MHz	JEDEC LEAD (Pb)-FREE
	AA = 0.0025 % (25 ppm) A = 0.005 % (50 ppm) B = 0.01 % (100 ppm)	blank = 0 °C to + 70 °C R = - 40 °C to + 85 °C	blank = pin 1 open E = disable to tri-state		standard

GLOBAL PART NUMBER

X	O	5	2	C	T	E	L	N	A	4	0	M
MODEL				FREQUENCY STABILITY	OTR	ENABLE/ DISABLE	PACKAGE CODE	OPTIONS		FREQUENCY		

GLOBAL PART NUMBERING

X O 5 2	C	T	E	L	N A	4 0 M
MODEL NUMBER	**FREQUENCY STABILITY**	**OPERATING TEMPERATURE (OTR)**	**ENABLE/ DISABLE**	**PACKAGE CODE**	**OPTION**	**FREQUENCY**
XO53 = XO-53 XO54 = XO-54 XO34 = XO-543 XO52 = XO-52 XO32 = XO-523 XO5M = XOSM-52 XO63 = XOSM-533 XO62 = XOSM-532 XO61 = XOSM-531 XO57 = XOSM-57 XO37 = XOSM-573 XO27 = XOSM-572 XO17 = XOSM-571 XO55 = XOSM-55 XO35 = XOSM-553	C = 0.01 % (100 ppm) D = 0.005 % (50 ppm) E = 0.0025 % (25 ppm)	T = 0 °C to + 70 °C R = - 40 °C to + 85 °C	F = pin 1 open E = disable to tristate	**Tape and reel** H = RF7 **Bulk** A = B04 (XO63, XO62, XO61) C = D06 (XO57, XO37, XO27, XO17) D = D07 (XO53, XO54, XO34, XO55, XO35) L = D08 (XO52, XO32, XO5M)	NA = no additional options 60 = 45/55 symmetry Contact factory for all other options	4M = 4 MHz 40M = 40 MHz 100M = 100 MHz 12M288 = 12.288 MHz M is used as decimal place holder in frequency

Example: XO52CTELNA40M

PART MARKING

Line 1: M2802XXXXX (part number)

Line 2: XX.XXXXM (frequency)

Line 3: yywwvv (date/factory code)

Disclaimer

ALL PRODUCT, PRODUCT SPECIFICATIONS AND DATA ARE SUBJECT TO CHANGE WITHOUT NOTICE TO IMPROVE RELIABILITY, FUNCTION OR DESIGN OR OTHERWISE.

Vishay Intertechnology, Inc., its affiliates, agents, and employees, and all persons acting on its or their behalf (collectively, “Vishay”), disclaim any and all liability for any errors, inaccuracies or incompleteness contained in any datasheet or in any other disclosure relating to any product.

Vishay makes no warranty, representation or guarantee regarding the suitability of the products for any particular purpose or the continuing production of any product. To the maximum extent permitted by applicable law, Vishay disclaims (i) any and all liability arising out of the application or use of any product, (ii) any and all liability, including without limitation special, consequential or incidental damages, and (iii) any and all implied warranties, including warranties of fitness for particular purpose, non-infringement and merchantability.

Statements regarding the suitability of products for certain types of applications are based on Vishay’s knowledge of typical requirements that are often placed on Vishay products in generic applications. Such statements are not binding statements about the suitability of products for a particular application. It is the customer’s responsibility to validate that a particular product with the properties described in the product specification is suitable for use in a particular application. Parameters provided in datasheets and/or specifications may vary in different applications and performance may vary over time. All operating parameters, including typical parameters, must be validated for each customer application by the customer’s technical experts. Product specifications do not expand or otherwise modify Vishay’s terms and conditions of purchase, including but not limited to the warranty expressed therein.

Except as expressly indicated in writing, Vishay products are not designed for use in medical, life-saving, or life-sustaining applications or for any other application in which the failure of the Vishay product could result in personal injury or death. Customers using or selling Vishay products not expressly indicated for use in such applications do so at their own risk and agree to fully indemnify and hold Vishay and its distributors harmless from and against any and all claims, liabilities, expenses and damages arising or resulting in connection with such use or sale, including attorneys fees, even if such claim alleges that Vishay or its distributor was negligent regarding the design or manufacture of the part. Please contact authorized Vishay personnel to obtain written terms and conditions regarding products designed for such applications.

No license, express or implied, by estoppel or otherwise, to any intellectual property rights is granted by this document or by any conduct of Vishay. Product names and markings noted herein may be trademarks of their respective owners.