Part Number: XLFBB169W

5mm ROUND LED LAMP

Features

- Radial / Through hole package
- Reliable & robust
- Low power consumption
- Available on tape and reel
- RoHS Compliant

ATTENTION
OBSERVE PRECAUTIONS FOR HANDLING ELECTROSTATIC DISCHARGE SENSITIVE DEVICES

Package Schematics

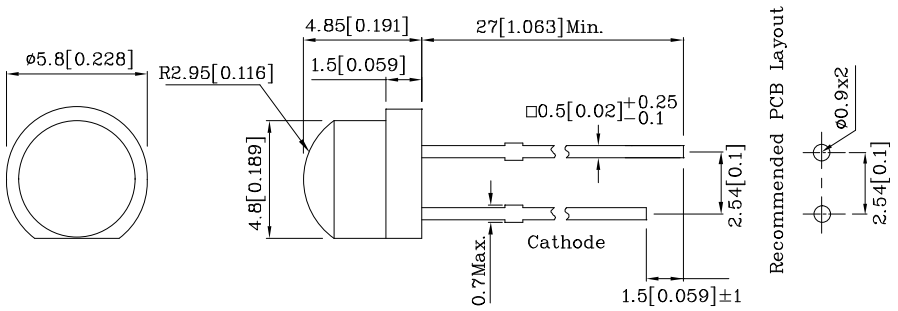

Notes:
1. All dimensions are in millimeters (inches).
2. Tolerance is ±0.25(0.01") unless otherwise noted.
3. Specifications are subject to change without notice.

Absolute Maximum Ratings (T_A=25°C)		**Blue (InGaN)**	**Unit**
Reverse Voltage	V_R	5	V
Forward Current	I_F	30	mA
Forward Current (Peak) 1/10 Duty Cycle 0.1ms Pulse Width	i_{FS}	100	mA
Power Dissipation	P_D	120	mW
Operating Temperature	T_A	-40 ~ +85	°C
Storage Temperature	Tstg	-40 ~ +85	
Electrostatic Discharge Threshold (HBM)		250	V
Lead Solder Temperature [2mm Below Package Base]		260°C For 3 Seconds	
Lead Solder Temperature [5mm Below Package Base]		260°C For 5 Seconds	

A Relative Humidity between 40% and 60% is recommended in ESD-protected work areas to reduce static build up during assembly process (Reference JEDEC/JESD625-A and JEDEC/J-STD-033)

Operating Characteristics (T_A=25°C)		**Blue (InGaN)**	**Unit**
Forward Voltage (Typ.) (I_F=20mA)	V_F	3.3	V
Forward Voltage (Max.) (I_F=20mA)	V_F	4	V
Reverse Current (Max.) (V_R=5V)	I_R	50	uA
Wavelength of Peak Emission CIE127-2007* (Typ.) (I_F=20mA)	λP	465*	nm
Wavelength of Dominant Emission CIE127-2007* (Typ.) (I_F=20mA)	λD	470*	nm
Spectral Line Full Width At Half-Maximum (Typ.) (I_F=20mA)	△λ	22	nm
Capacitance (Typ.) (V_F=0V, f=1MHz)	C	100	pF

Part Number	Emitting Color	Emitting Material	Lens-color	Luminous Intensity CIE127-2007* (I_F=20mA) mcd		Wavelength CIE127-2007* nm λP	Viewing Angle 2θ 1/2
				min.	typ.		
XLFBB169W	Blue	InGaN	Water Clear	500*	1095*	465*	60°

*Luminous intensity value and wavelength are in accordance with CIE127-2007 standards.

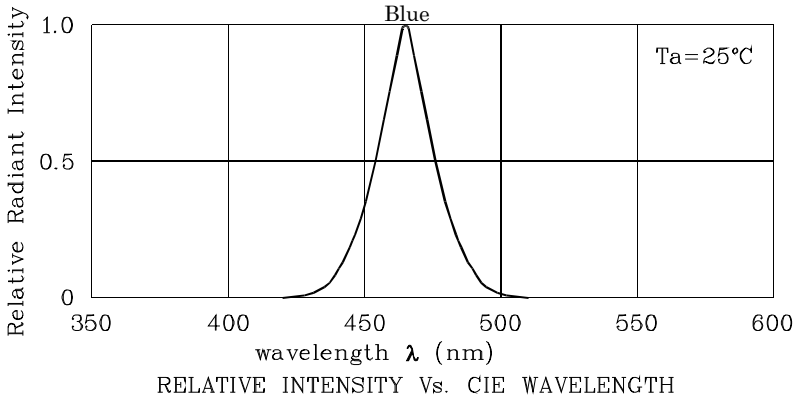

RELATIVE INTENSITY Vs. CIE WAVELENGTH

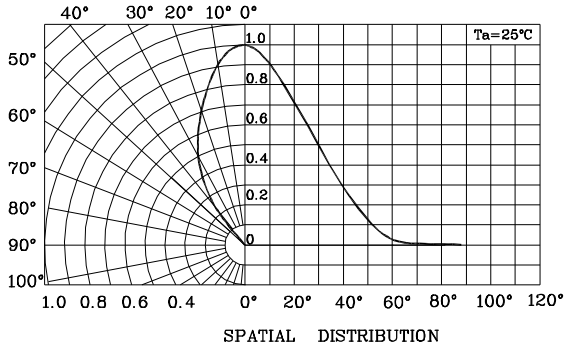

SPATIAL DISTRIBUTION

❖ Blue

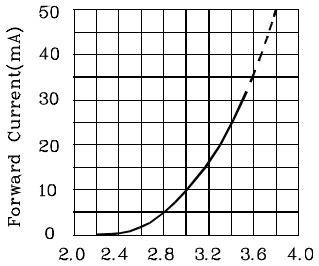

FORWARD CURRENT Vs. FORWARD VOLTAGE

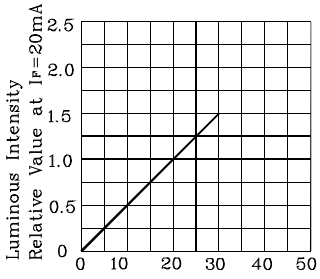

LUMINOUS INTENSITY Vs. FORWARD CURRENT

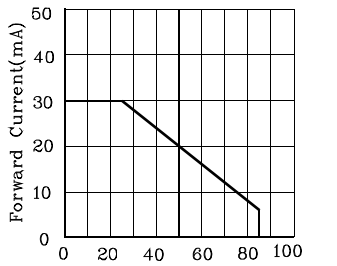

FORWARD CURRENT DERATING CURVE

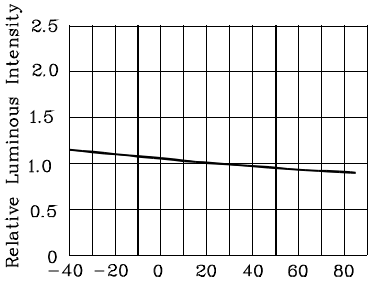

LUMINOUS INTENSITY Vs. AMBIENT TEMPERATURE

Wave Soldering Profile For Thru-Hole Products (Pb-Free Components)

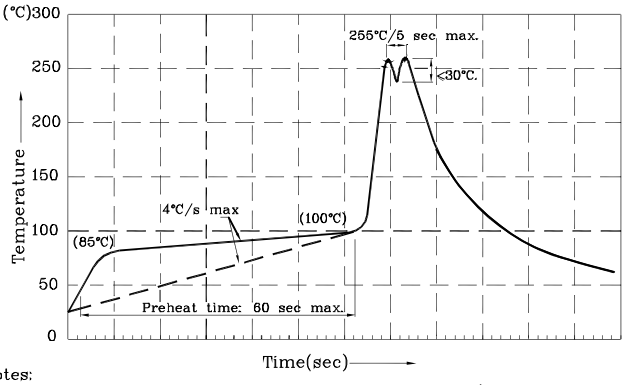

Notes:
1. Recommend pre-heat temperature of 105℃ or less (as measured with a thermocouple attached to the LED pins) prior to immersion in the solder wave with a maximum solder bath temperature of 260℃
2. Peak wave soldering temperature between 245℃ ~ 255℃ for 3 sec (5 sec max).
3. Do not apply stress to the epoxy resin while the temperature is above 85℃.
4. Fixtures should not incur stress on the component when mounting and during soldering process.
5. SAC 305 solder alloy is recommended.
6. No more than one wave soldering pass.

Remarks:

If special sorting is required (e.g. binning based on forward voltage, luminous intensity / luminous flux, or wavelength),
the typical accuracy of the sorting process is as follows:
1. Wavelength: +/-1nm
2. Luminous Intensity / Luminous Flux: +/-15%
3. Forward Voltage: +/-0.1V

Note: Accuracy may depend on the sorting parameters.

PACKING & LABEL SPECIFICATIONS

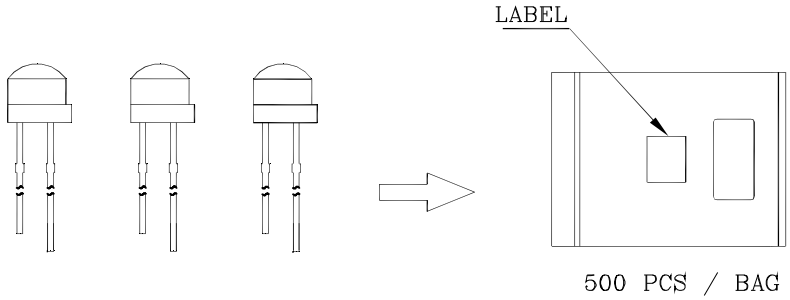

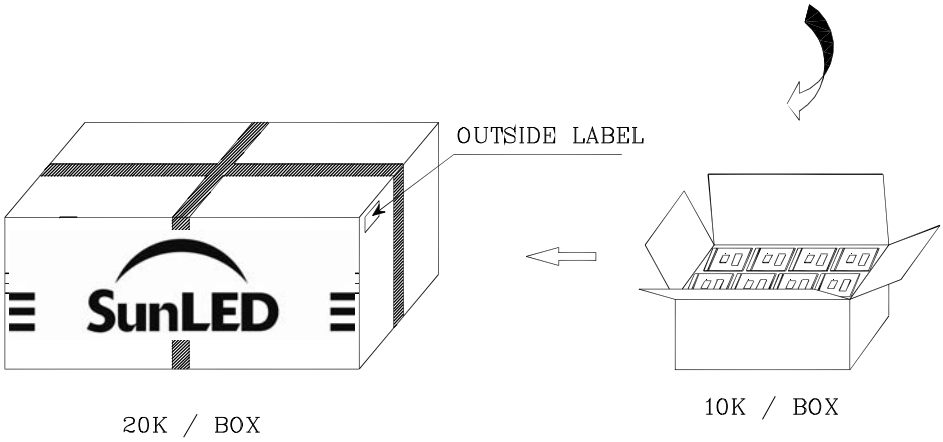

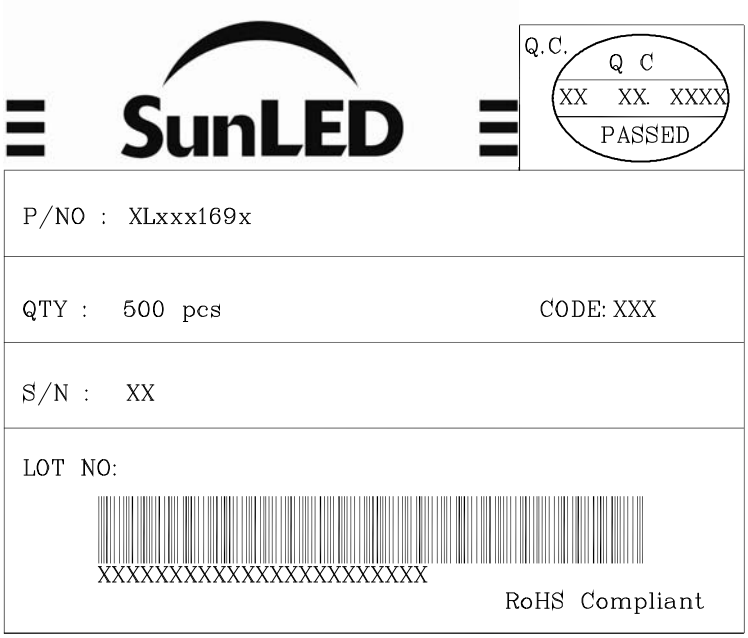

TERMS OF USE

1. Data presented in this document reflect statistical figures and should be treated as technical reference only.
2. Contents within this document are subject to improvement and enhancement changes without notice.
3. The product(s) in this document are designed to be operated within the electrical and environmental specifications indicated on the datasheet. User accepts full risk and responsibility when operating the product(s) beyond their intended specifications.
4. The product(s) described in this document are intended for electronic applications in which a person's life is not reliant upon the LED. Please consult with a SunLED representative for special applications where the LED may have a direct impact on a person's life.
5. The contents within this document may not be altered without prior consent by SunLED.
6. Additional technical notes are available at http://www.SunLEDusa.com/TechnicalNotes.asp