SPECIFICATIONS

PARAMETERS	VALUES	UNITS
RATED VOLTAGE	12	Vdc
OPERATING VOLTAGE RANGE	6 ~ 16	Vdc
RATED CURRENT (MAX)	260	mA
MINIMUM SPL @ 10 CM	123	dBA
RESONANT FREQUENCY	2,000/4,000 ± 500	Hz
TONE OR PULSE RATE	SIREN	3.0 pulse /sec
OPERATING TEMPERATURE	-30 ~ +70	°C
STORAGE TEMPERATURE	-30 ~ +70	°C
HOUSING MATERIAL	ABS	-
TERMINAL MATERIAL	LEAD WIRES	-
WEIGHT	90	grams

THIS DOCUMENT CONTAINS DATA PROPRIETARY TO PROJECTS UNLIMITED, INC. ANY USE OR REPRODUCTION, IN ANY FORM, WITHOUT PRIOR WRITTEN PERMISSION OF PROJECTS UNLIMITED, INC. IS PROHIBITED.
©2003, Projects Unlimited Inc.

REVISION HISTORY

LTR	DESCRIPTION	DATE	APPROVED
-	RELEASED FROM ENGINEERING	5/15/2006	
A	REVISED TO INVENTOR 3-D DRAWING TEMPLATE	3/26/2008	B.R.
B	REVISED LENGTH DIMENSION	9/1/2011	B.R.
C	REVISED OPERATING TEMPERATURE	4/9/2018	M.V.

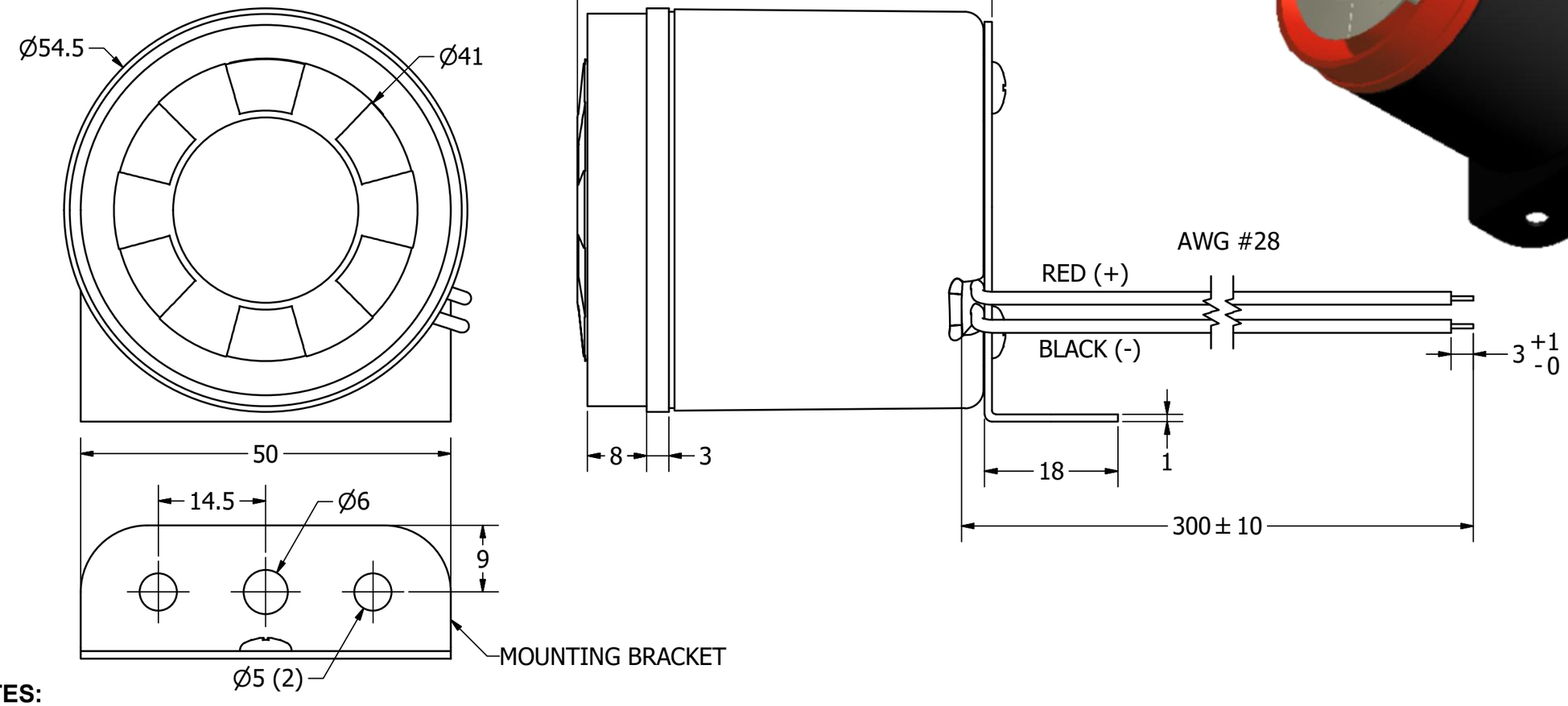

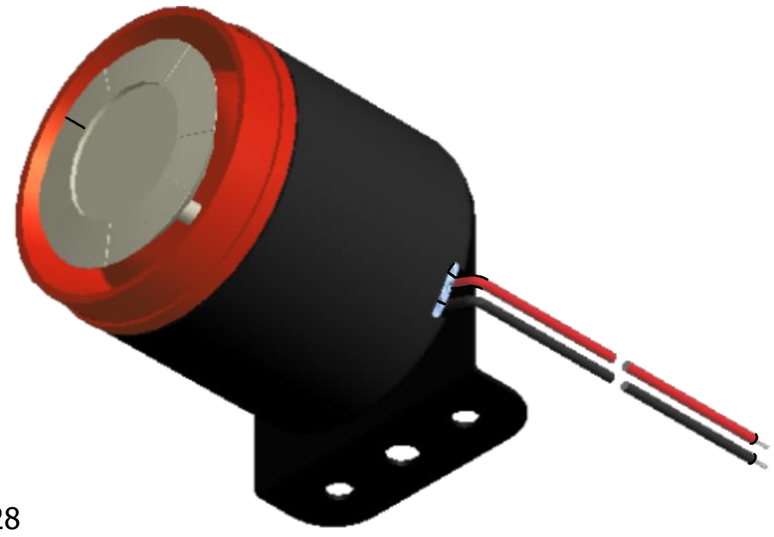

NOTES:

1. ALL DIMENSIONS ARE IN MILLIMETERS.
2. SPECIFICATIONS SUBJECT TO CHANGE OR WITHDRAWL WITHOUT NOTICE.
3. THIS PART IS RoHS 2002/95/EC COMPLIANT.

UNLESS OTHERWISE SPECIFIED: DIMENSIONS ARE IN MILLIMETERS, TOLERANCES ARE ±0.5 AND ANGLES ARE ±3°.	SIZE	Designed by	Date	Checked by	Date	Approved by	Date	Drawn Date
	A3	J.D.	5/15/2006	E.P.	5/15/2006	B.R.	5/15/2006	3/26/2008

pui audio™ inc
a projects unlimited company

XL-5530L-LW300-S-R.idw

XL-5530L-LW300-S-R

Indicator

Edition	Sheet
-	1 / 1