10 Gbps DWDM Multirate XFP Transceivers

9.95 Gbps - 11.1 Gbps



Features

- Models for all C-band wavelengths on the 100GHz DWDM ITU grid
- Cold start up wavelength compliance (stable transmit frequency)
- 120 km with EDC, 80 km, and 40 km reach models
- XFI high-speed electrical interface
- 9.95 Gbps, 10.31 Gbps, 10.52 Gbps, 10.7 Gbps, and 11.1 Gbps support
- Digital Diagnostics
- Cooled EML with isolator
- APD receiver (120 km and 80 km) and PIN receiver (40 km)
- Power consumption under 3.5 watts
- -5° to 70° C operating temperature range
- XFP MSA Rev 4.5 compliance
- RoHS and China RoHS compliance
- Class 1 Laser, 21CFR 1040.10/1040.11 compliance
- EN 60825-1/A1:2002 compliance
- USA and Canada UL listing
- External reference clock synchronization

Absolute Maximum Rating

Parameter	Symbol	Min.	Typical	Max.	Unit
Maximum Supply Voltage (3.3V)	$V_{cc}3$	-0.3	-	3.6	V
Maximum Supply Voltage (5.0V)	$V_{cc}5$	-0.3	-	5.5	V
Maximum Supply Voltage (1.8V)	$V_{cc}2$	-0.3	-	2	V
Operating Temperature (case)	BR	9.95	-	11.1	Gb/s
Storage Temperature	T_{st}	-40	-	85	°C

General Operations

Parameter	Symbol	Min	Typical	Max	Unit
Supply Voltage (1.8V)	$V_{cc}2$	1.71	1.8	1.89	V
Supply Voltage (3.3V)	$V_{cc}3$	3.14	3.3	3.47	V
Supply Voltage (5V)	$V_{cc}5$	4.75	5	5.25	V
Total Current on Any Pin	I_{cc}	-	-	500	mA
Inrush Current (1.8V)	$I_{inrush}2$	-	-	1	A
Inrush Current (3.3V)	$I_{inrush}3$	-	-	0.75	A
Inrush Current (5V)	$I_{inrush}5$	-	-	0.5	A
Module Current Ramp Rate	-	-	-	100	mA/µS
Power on 1.8V Rail	P_{2rail}	-	-	1.8	W
Power on 3.3V Rail	P_{3rail}	-	-	2.5	W
Power on 5V Rail	P_{5rail}	-	-	2.5	W
Module Total Power Consumption	P_t	-	-	3.5	W
Power Consumption-P_Down Mode	P_{p_d}	Compliant to Section 2.7.2 of XFP MSA			
Power Supply Noise Rejection	PSNR				-

Transmitter Specifications (Electical)					
Parameter	**Symbol**	**Min**	**Typical**	**Max**	**Unit**
Input Differential Impedence	R_{in}	-	100	-	Ω
Differential Data Input Swing	$V_{in,p-p}$	120	-	820	mV
TxDisable_Disable	V_d	2	-	$V_{cc}3$	V
TxDisable_Enable	V_{en}	GND	-	GND+0.8	V

Transmitter Specifications (Optical)					
Parameter	**Symbol**	**Min**	**Typical**	**Max**	**Unit**
Output Power: **XFP-DWLR12P-xx**	P_O	-2	0	2	dBm
XFP-DWLR08P-xx	P_O	0	2	4	dBm
XFP-DWIR04P-xx	P_O	-1	0.5	2	dBm
Average Launch Power Tx_Off	P_{off}	-	-	-30	dBm
Extinction Ratio: **XFP-DWLR12P-xx**	ER	8.2	-	-	dB
XFP-DWLR08P-xx	ER	9	-	-	dB
XFP-DWIR04P-xx	ER	8.2	-	-	dB
Eye Mask	ITU-T G.691, Telecordia GR-253-CORE, IEEE802.3 10GBASE-ZR Compliant				
Side Mode Suppression Ratio	SMSR	30	-	-	dB
Center Wavelength	λ		ITU Grid		nm
Channel Spacing	Δf	-	100	-	GHz
Spectral Width	$\Delta\lambda_{20}$	-	-	1	nm
Jitter Generation (peak-to-peak)	$J_{gen(pk-pk)}$	-	-	0.1	UI
Jitter Generation (RMS)	$J_{gen(RMS)}$	-	-	0.01	UI
Dispersion Penalty at 2200 ps/nm[a]	DP	-	-	2	dB
Relative Intensity Noise	RIN	-	-	-130	dB/Hz
Reflectance Tolerance	ref_T	-	-	-27	dB

Receiver Specifications (Electrical)					
Parameter	**Symbol**	**Min**	**Typical**	**Max**	**Unit**
Reference Differential Output Impedence	Z_d	-	100	-	Ω
Differential Data Output Swing	$V_{out,p-p}$	340	-	850	mV
Output Rise Time, 20-80%	t_r	24	-	-	ps
Output Fall Time, 20-80%	t_f	24	-	-	ps
LOS Fault	V_{LOS_fault}	host_Vcc3 - 0.5	-	host_Vcc3	V
LOS Normal	V_{LOS_normal}	GND	-	GND + 0.4	V

Receiver Specifications (Optical)						
Parameter		**Symbol**	**Min**	**Typical**	**Max**	**Unit**
Sensitivity (9.95 Gb/s):	**XFP-DWLR12P-xx**[a]	$Rx_{sens995}$	-	-	-24	dBm
	XFP-DWLR08P-xx[b]	$Rx_{sens995}$	-	-	-24	dBm
	XFP-DWIR04P-xx[b]	$Rx_{sens995}$	-	-	-16	dBm
Sensitivity (10.7 Gb/s):	**XFP-DWLR12P-xx**[a]	$Rx_{sens1070}$	-	-	-23	dBm
	XFP-DWLR08P-xx[b]	$Rx_{sens1070}$	-	-	-23	dBm
	XFP-DWIR04P-xx[b]	$Rx_{sens1070}$	-	-	-15	dBm
Saturation:	**XFP-DWLR12P-xx**[a]	Rx_{OL}	-7	-	-	dBm
	XFP-DWLR08P-xx[b]	Rx_{OL}	-7	-	-	dBm
	XFP-DWIR04P-xx[b]	Rx_{OL}	0	-	-	dBm
Wavelength[c]		λ	1528	-	1564	nm
Optical Return Loss		ORL	-	-	-27	dB
LOS Assert:	**XFP-DWLR12P-xx**	-	-34	-	-	dBm
	XFP-DWLR08P-xx	-	-34	-	-	dBm
	XFP-DWIR04P-xx	-	-24	-	-	dBm
LOS De-assert:	**XFP-DWLR12P-xx**	-	-	-	-24	dBm
	XFP-DWLR08P-xx	-	-	-	-24	dBm
	XFP-DWIR04P-xx	-	-	-	-16	dBm
LOS Hysteresis		-	0.5	-	-	dB

a) At 8.2dB ER, 1^{e-12} BER, 2^{31}-1 PRBS, back to back
b) At 9dB ER, 1^{e-12} BER, 2^{31}-1 PRBS, back to back
c) Operational over 1200 - 1625 nm range

Reference Clock					
Parameter	**Symbol**	**Min**	**Typical**	**Max**	**Unit**
Clock Differential Input Impedance	Z_d	80	100	120	Ω
Differential Input Clock Amplitude (p-p)	-	640	-	1600	mV
Reference Clock Duty Cycle	-	40	-	60	%
Reference Clock Rise/Fall Time (20%-80%)	T_r/T_f	200	-	1250	ps
Reference Clock Frequency	f_0	-	Baud/64	-	MHz

Ordering Information

Model	Description	Data Rate	Wavelength (nm)	Dispersion Penalty (dB)	Dispersion Spec. (ps/nm)	Bail Latch Color	Distance (km)
XFP-DWLR12P-*xx**	10 Gbps DWDM Multirate XFP Tranceiver with Digital Diagnostics	9.95 - 11.1 Gbps	ITU Grid	2	2200	White	120**
XFP-DWLR08P-*xx**	10 Gbps DWDM Multirate XFP Tranceiver with Digital Diagnostics	9.95 - 11.1 Gbps	ITU Grid	2	1600	White	80
XFP-DWIR04P-*xx**	10 Gbps DWDM Multirate XFP Tranceiver with Digital Diagnostics	9.95 - 11.1 Gbps	ITU Grid	2	800	White	40

* See Wavelength Guide below for "***xx***" values
** EDFA is required for full distance reach

λc Wavelength Guide

ITU Channel (*xx*)	Frequency (THz)	Wavelength (nm)	ITU Channel (*xx*)	Frequency (THz)	Wavelength (nm)
17	191.7	1563.863	40	194.0	1545.322
18	191.8	1563.047	41	194.1	1544.526
19	191.9	1562.233	42	194.2	1543.730
20	192.0	1561.419	43	194.3	1542.936
21	192.1	1560.606	44	194.4	1542.142
22	192.2	1559.794	45	194.5	1541.349
23	192.3	1558.983	46	194.6	1540.557
24	192.4	1558.173	47	194.7	1539.766
25	192.5	1557.363	48	194.8	1538.976
26	192.6	1556.555	49	194.9	1538.186
27	192.7	1555.747	50	195.0	1537.397
28	192.8	1554.940	51	195.1	1536.609
29	192.9	1554.134	52	195.2	1535.822
30	193.0	1553.329	53	195.3	1535.036
31	193.1	1552.524	54	195.4	1534.250
32	193.2	1551.721	55	195.5	1533.465
33	193.3	1550.918	56	195.6	1532.681
34	193.4	1550.116	57	195.7	1531.898
35	193.5	1549.315	58	195.8	1531.116
36	193.6	1548.515	59	195.9	1530.334
37	193.7	1547.715	60	196.0	1529.553
38	193.8	1546.917	61	196.1	1528.773
39	193.9	1546.119			

Pin Out Definition				
Pin	**Logic**	**Symbol**	**Name/Description**	**Note**
1		GND	Module Ground	1
2		VEE5	Optional -5.2V power supply (not used)	
3	LVTTL-I	Mod_DeSel	Module De-Select; when held low allows module to respond to 2-wire interface interface	
4	LVTTL-O	Interrupt	Interrupt; indicates presence of an important condition which can be read over the 2-wire serial interface	2
5	LVTTL-I	TX_DIS	Transmitter Disable; turns off transmitter laser output	
6		Vcc5	+5 V Power Supply	
7		GND	Module Ground	1
8		Vcc3	+3.3 V Power Supply	
9		Vcc3	+3.3 V Power Supply	
10	LVTTL-I/O	SCL	2-Wire Serial Interface Clock	2
11	LVTTL-I/O	SDA	2-Wire Serial Interface Data Line	2
12	LVTTL-O	Mod_Abs	Indicates module is not present. Grounded in the module	2
13	LVTTL-O	Mod_NR	Module Not Ready; indicating module operational fault	2
14	LVTTL-O	RX_LOS	Receiver Loss of Signal Indicator	2
15		GND	Module Ground	1
16		GND	Module Ground	1
17	CML-O	RD-	Receiver Inverted Data Output	
18	CML-O	RD+	Receiver Non-Inverted Data Output	
19		GND	Module Ground	1
20		Vcc2	+1.8 V Power Supply	
21	LVTTL-I	P_Down/RST	Power Down; When high, requires the module to limit power consumption to 1.5 W or below. 2-wire serial interface must be functional in the low power mode. Reset; the falling edge initiates a complete rest of the module including the 2-wire serial interface, equivalent to a power cycle.	
22		Vcc2	+1.8 V Power Supply	
23		GND	Module Ground	1
24	PECL-I	RefCLK+	Reference Clock Non-Inverted Input, AC coupled on the host board	
25	PECL-I	RefCLK-	Reference Clock Inverted Input, AC coupled on the host board	
26		GND	Module Ground	1
27		GND	Module Ground	1
28	CML-I	TD-	Transmitter Inverted Data Input	
29	CML-I	TD+	Transmitter Non-Inverted Data Input	
30		GND	Module Ground	1

Note:
1. Module ground pins GND are isolated from the module case and chassis ground within the module.
2. Shall be pulled up with 4.7k-10kohms to a voltage between 3.15 V and 3.45 V on the host board.

Connectivity Unlimited™

Datasheet

Mechanical Drawing

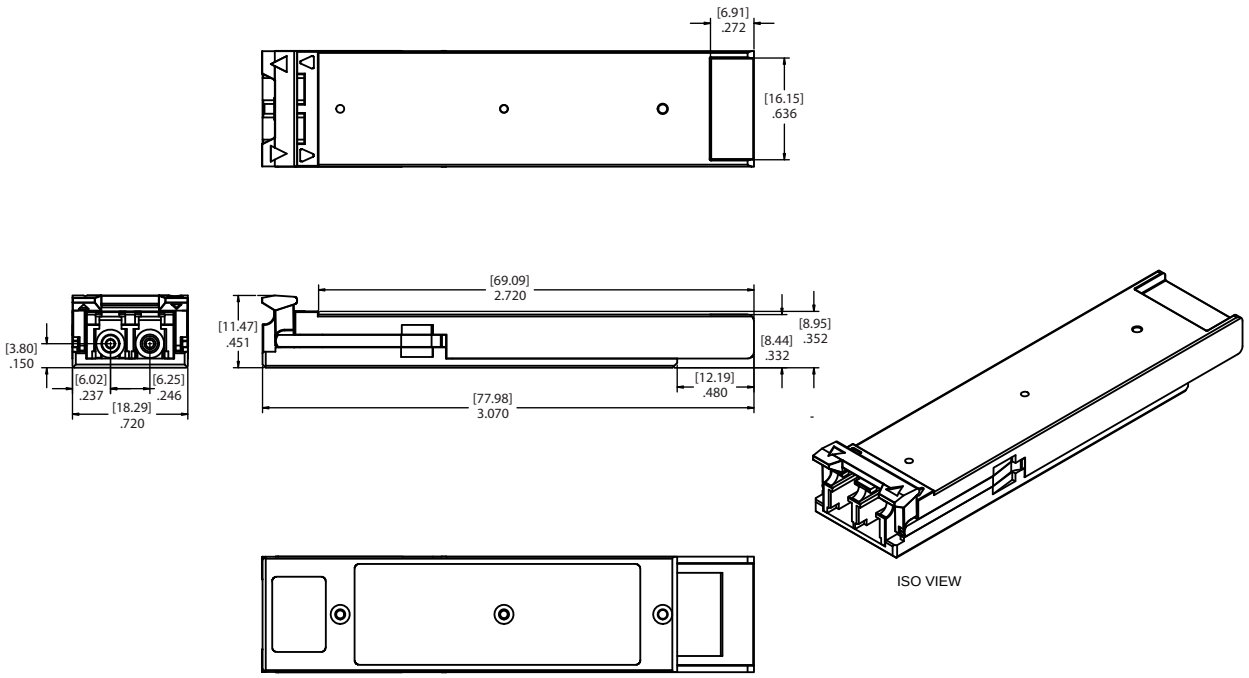

1. MRV'S XFP TRANSCEIVERS ARE COMPLIANT WITH THE DIMENSIONS DEFINED BY XFP MULTISOURCING AGREEMENT (MSA).

NOTES: UNLESS OTHERWISE SPECIFIED

Warnings

Handling Precautions: This device is susceptible to damage as a result of electrostatic discharge (ESD). A static free environment is highly recommended. Follow guidelines according to proper ESD procedures.

Laser Safety: High power spectral laser emission is deemed dangerous to human eyes. Always avoid direct and indirect eye exposuers.

MRV has more than 50 offices throughout the world. Addresses, phone numbers and fax numbers are listed at www.mrv.com. Please e-mail us at **sales@mrv.com** or call us for assistance.

MRV Los Angeles
20415 Nordhoff St.
Chatsworth, CA 91311
800-338-5316
818-773-0900

MRV Boston
295 Foster St.
Littleton, MA 01460
800-338-5316
978-952-4700

MRV International
Business Park Moerfelden
Waldeckerstrasse 13
64546 Moerfelden-Walldorf
Germany
Tel. (49) 6105/2070
Fax (49) 6105/207-100

All statements, technical information and recommendations related to the products herein are based upon information believed to be reliable or accurate. However, the accuracy or completeness thereof is not guaranteed, and no responsibility is assumed for any inaccuracies. Please contact MRV Communications for more information. MRV Communications and the MRV Communications logo are trademarks of MRV Communications, Inc. Other trademarks are the property of their respective holders.

Copyright ©2008 MRV Communications, Inc. All Rights Reserved.