Schematic:

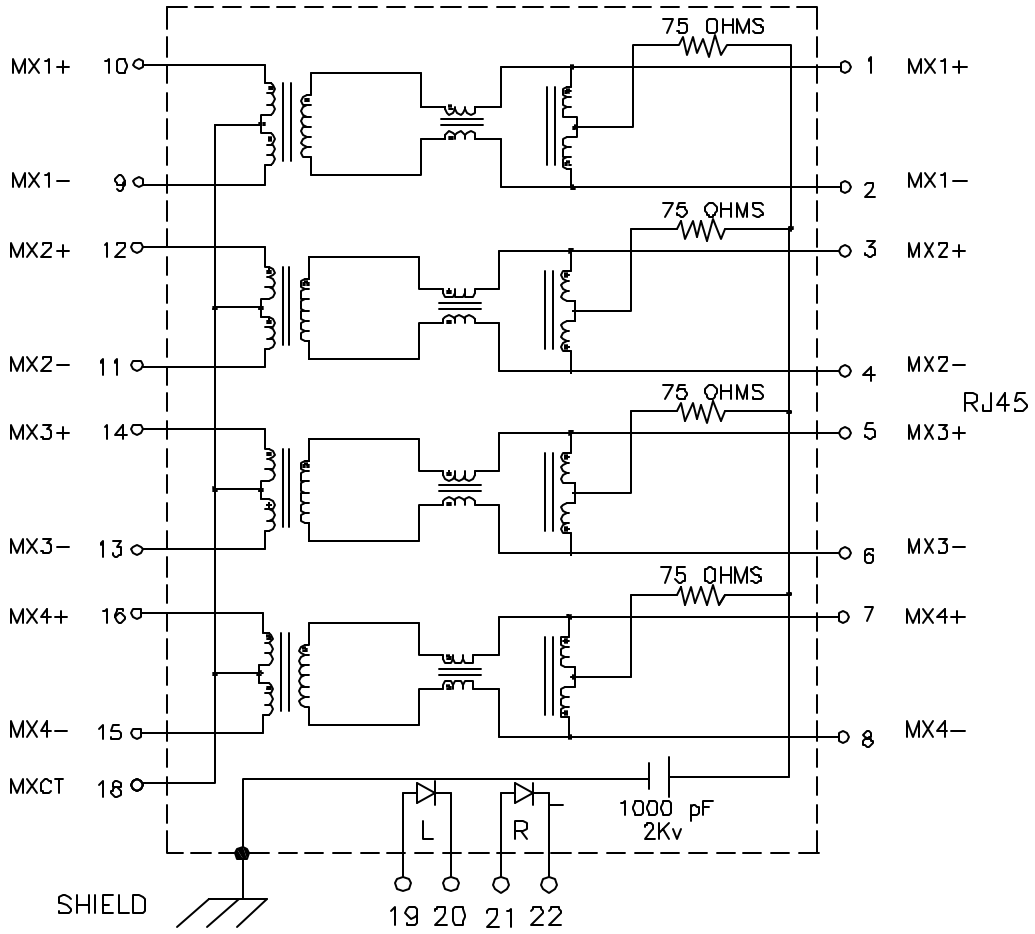

Electrical Specifications: @25°C

Isolation Voltage: 1500 Vrms @60Hz 1MIN

Common Mode Rejection: @1–50MHz –30dB Typ

@50–130MHz –20dB Typ

Crosstalk: @1–10MHz –40dB Typ

@30–60MHz –35dB Typ

@60–100MHz –30dB Typ

Insertion Loss (1–100MHz): –1.0dB Typ

Return Loss: @1–10MHz –20dB Typ

@30MHz –16dB Typ

@60–80MHz –12dB Typ

Complete the Combo P/N as follows:

Replace 'x' & 'u' in the part number with one of the LED color letters:

Y=Yellow
G=Green
A=Amber
R=Red
C=Green(1)/Amber(2) Bicolor
D=Amber(1)/Green(2) Bicolor
M=Green(1)/Yellow(2) Bicolor
N=Yellow(1)/Green(2) Bicolor
P=Red(1)/Green(2) Bicolor
Q=Green(1)/Red(2) Bicolor

'x' = Left LED Color
'u' = Right LED Color

Single Color LED: Bi-Color LED:

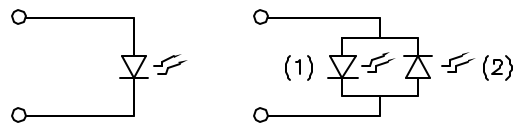

Notes:

1. Solderability: Leads shall meet MIL-STD-202G, Method 208H for solderability.
2. Flammability: UL94V-0
3. ASTM oxygen index: > 28%
4. Insulation System: Class F 155°C, UL file E151556
5. Operating Temperature Range: All listed parameters are to be within tolerance from –40°C to +85°C
6. Storage Temperature Range: –55°C to +125°C
7. Aqueous wash compatible
8. Electrical and mechanical specifications 100% tested
9. RoHS Compliant Component

DOC REV: A/6

PROPRIETARY:
Document is the property of XFMRS Group & is not allowed to be duplicated without authorization.

XFMRS Inc. www.XFMRS.com	Title: RJ45/DUAL USB GIGABIT COMBO		
UNLESS OTHERWISE SPECIFIED TOLERANCES: .xxx ±0.010 Dimensions in Inch	P/N: XFGIG12-USBxu-2		REV. A
	DWN.	Juan Mao	Oct-03-07
	CHK.	YK Liao	Oct-03-07
SHEET 1 OF 3	APP.	Joe Huff	Oct-03-07

Mechanical Dimensions:

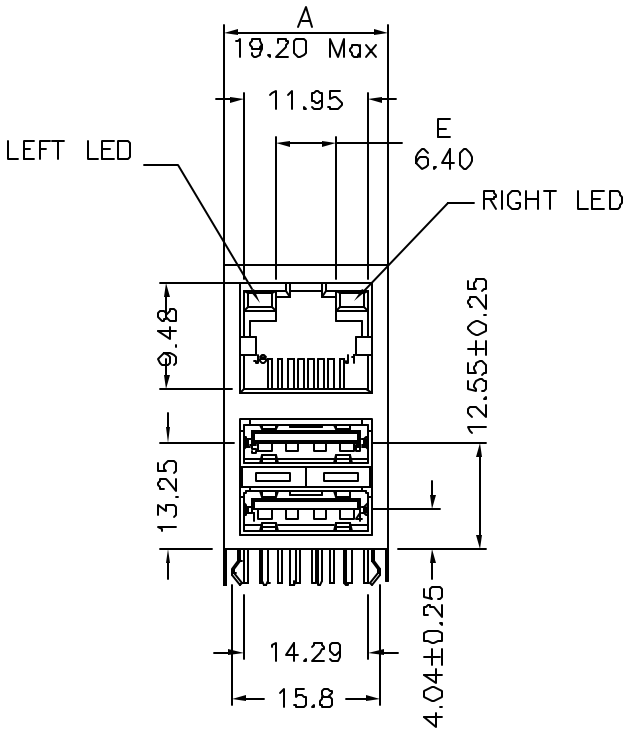

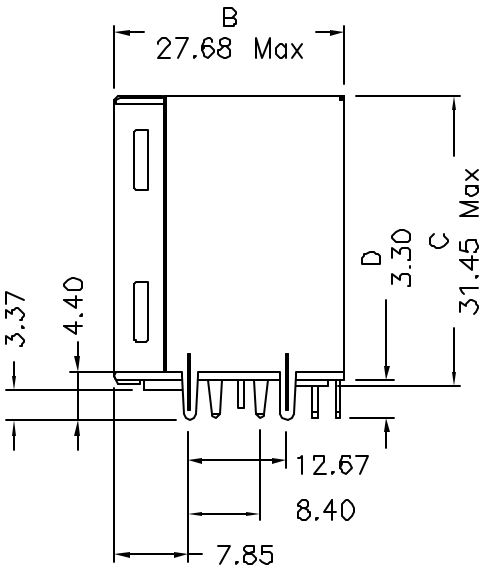

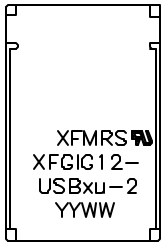

TOP VIEW

XFMRS Inc. www.XFMRS.com	Title: RJ45/DUAL USB GIGABIT COMBO		
UNLESS OTHERWISE SPECIFIED TOLERANCES: .x ±0.25 Dimensions in MM	P/N: XFGIG12-USBxu-2		REV. A
	DWN.	Juan Mao	Oct-03-07
	CHK.	YK Liao	Oct-03-07
SHEET 2 OF 3	APP.	YK Liao	Oct-03-07

DOC REV: A/6

PROPRIETARY:
Document is the property of XFMRS Group & is not allowed to be duplicated without authorization.

3. Mechanical Dimensions (cont.):

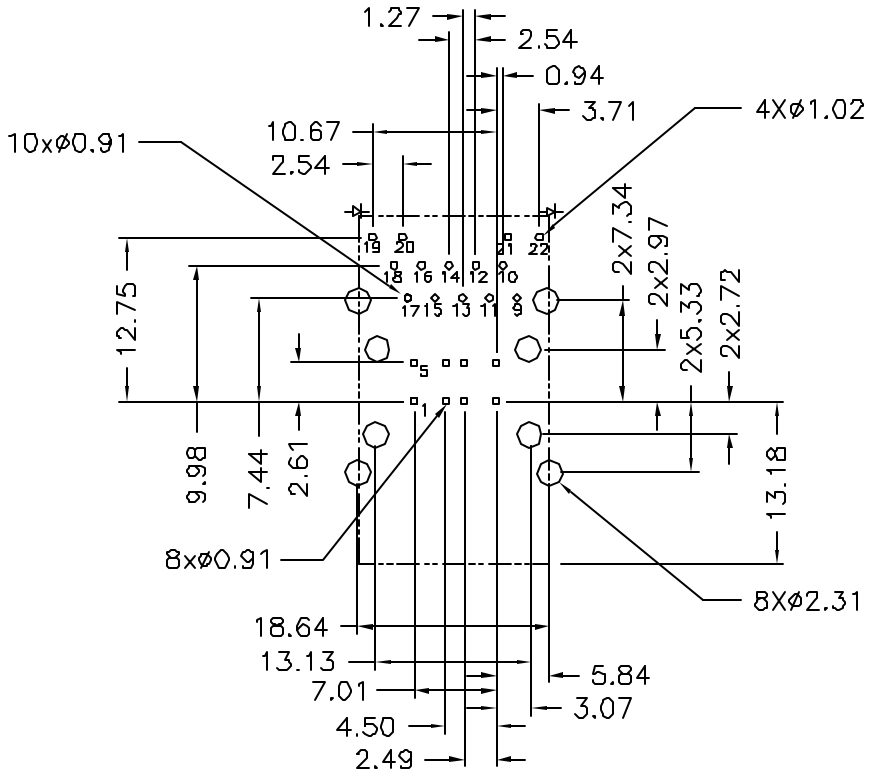

SUGGESTED PC BOARD LAYOUT VIEW

FROM COMPONENT SIDE

DOC. REV. A/6

PROPRIETARY:
Document is the property of XFMRS Group & is not allowed to be duplicated without authorization.

XFMRS Inc. www.XFMRS.com	Title: Mechanical Dimensions For STACKED USB COMBO		
UNLESS OTHERWISE SPECIFIED TOLERANCES: .xx ±0.25 Dimensions in MM	P/N: XFGIG12-USBxu-2		REV. A
	DWN.	Juan Mao	Oct-03-07
	CHK.	YK Liao	Oct-03-07
SHEET 3 OF 3	APP.	Joe Huff	Oct-03-07