1. Mechanical Dimensions:

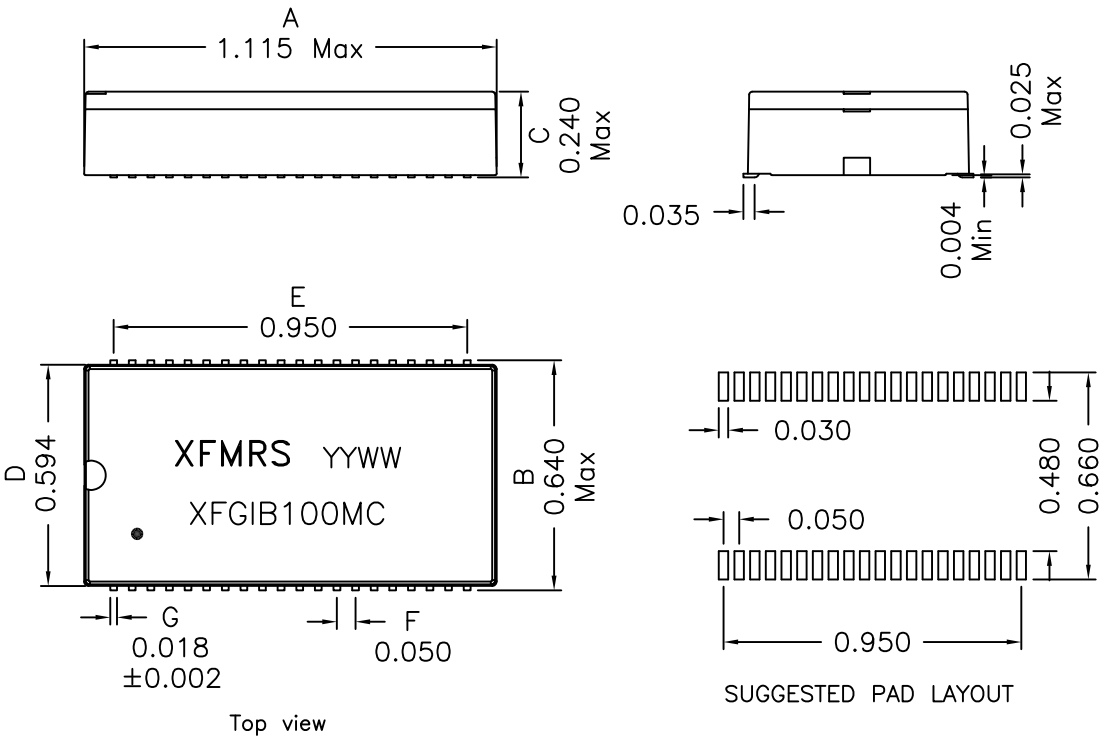

2. Schematic:

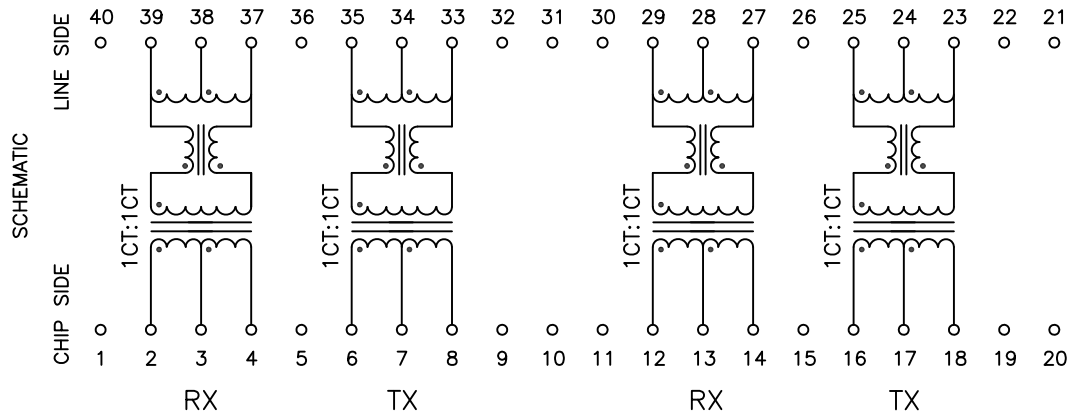

DOC. REV: A/1

3. Electrical Specifications: @25°C

TURNS RATIO: 1CT : 1CT
OCL: 350uH MIN @100KHz, 100mV
WITH 8mA DC BIAS
LEAKAGE INDUCTANCE: 0.35uH MAX @1MHz, 20mV
INTERWINDING CAP: 25pF MAX @1MHz, 20mV
DC RESISTANCE
LINE SIDE: 1.0 OHMS MAX
CHIP SIDE: 1.4 OHMS MAX
INSERTION LOSS: 1.5dB MAX @100KHz TO 100MHz
RETURN LOSS
MEASURED UNDER: 16dB MIN @2MHz TO 30MHz
100 OHMS ENVIRONMENT: 10dB MIN @60MHz TO 80MHz
HIPOT: PER HAND-WORK-03
OPERATING TEMPERATURE: -40°C TO 85°C
Q: 5 Min @10KHz 50mV

PRELIMINARY

Notes:

1. Solderability: Leads shall meet MIL-STD-202G, Method 208H for solderability.
2. Flammability: UL94V-0
3. ASTM oxygen index: > 28%
4. Insulation System: Class H 180°C. UL file E151556
5. Operating Temperature Range: All listed parameters are to be within tolerance from -40°C to +155°C
6. Storage Temperature Range: -40°C to +105°C
7. Aqueous wash compatible
8. SMD Lead Coplanarity: ±0.004"(0.102mm)
9. Electrical and mechanical specifications 100% tested
10. RoHS Compliant Component
11. Recommended IR Reflow peak temp of 250C Max.

XFMRS Inc www.XFMRS.com	Title: ELECTRICAL SPECIFICATION S558-5999-AF-F		
UNLESS OTHERWISE SPECIFIED TOLERANCES: .xx ±0.25 Dimensions in MM	P/N: XFGIB100MC		REV. A
	DWN.	Yuan	Jan-22-13
	CHK.	YK Liao	Jan-22-13
SHEET 1 OF 1	APP.	BSJ	Jan-22-13

PROPRIETARY Document is the property of XFMRS Group & is not allowed to be duplicated without authorization.