Schematic:

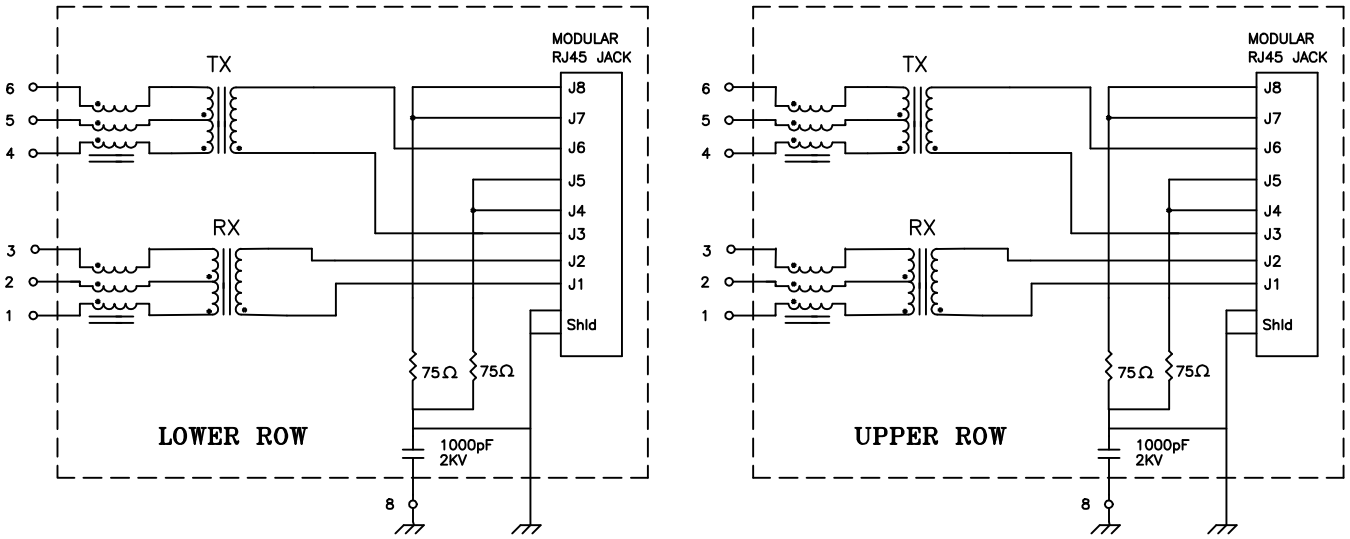

Electrical Specifications: 25°C

TURNS RATIO: TX 1CT:1±3%, RX 1CT:1±3%
Isolation Voltage: 1500 Vrms (INPUT to OUTPUT)
UTP SIDE OCL: 350uH Min @100KHz 100mV 8mADC
Rise Time (10–90%): 2.5ns Typical
Insertion Loss (1–100MHz): –1.0dB Maximum
Insertion Loss (100MHz–125MHz): –1.5dB Typ.
Return Loss: –20dB Typ. @30MHz
–12dB Typ @80MHz
Crosstalk 32MHz: 40.0dB Min
62MHz: 35.0dB Min
100MHz: 30.0dB Min
CMRR 100KHz–100MHz: 35.0dB Typ

Note:

1. Solderability: Leads shall meet MIL–STD–202, Method 208D for solderability.
2. Flammability: UL94V–0,
3. ASTM oxygen index: > 28% ,
4. Temperature rating: 155°C. UL file E151556,
5. Operating Temperature Range: All listed parameters are to be within tolerance from –40°C to +85°C

XFMRS Inc.	Title: 2x8 STACKED COMBO SERIES		
UNLESS OTHERWISE SPECIFIED TOLERANCES: .xxx ±0.010 Dimensions in Inch	P/N: XFATM8F–STACK16–4		REV. A
	DWN.	康玉坤	Sep–10–02
	CHK.	李清儿	Sep–10–02
SHEET 1 OF 2	APP.	BW	Sep–10–02

Mechanical Dimensions:

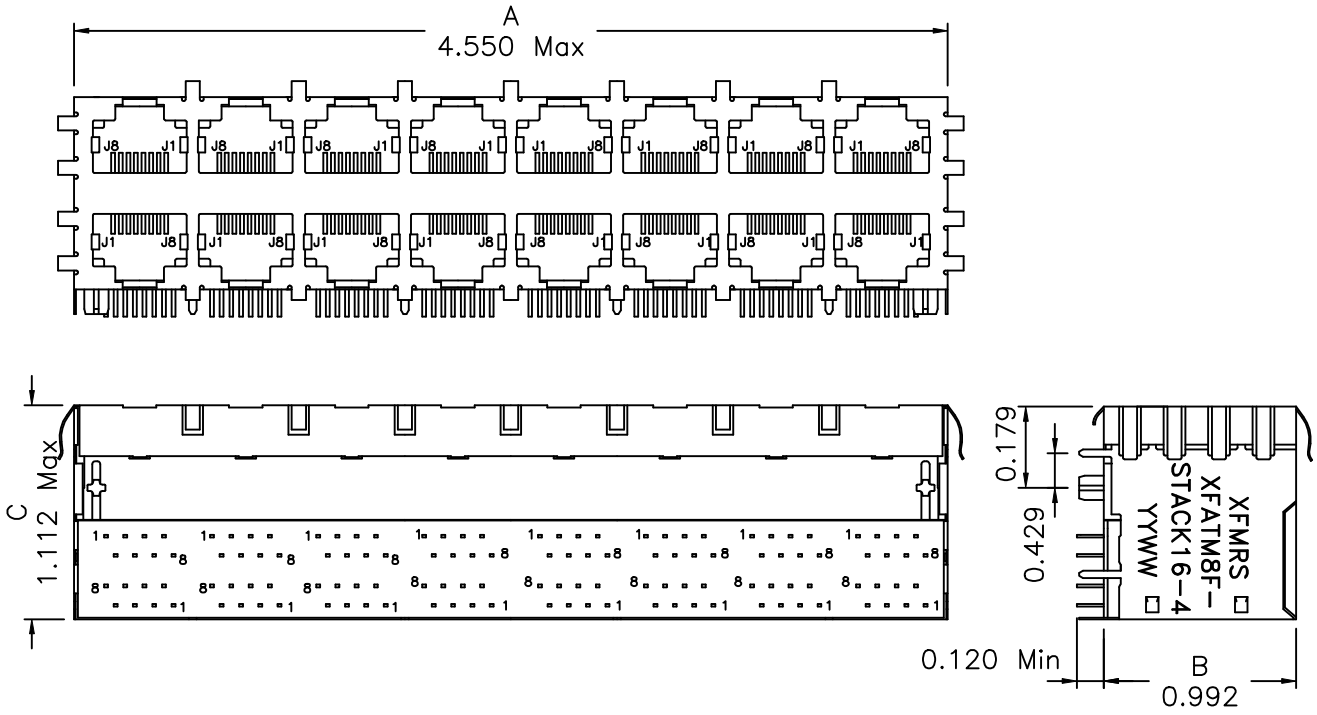

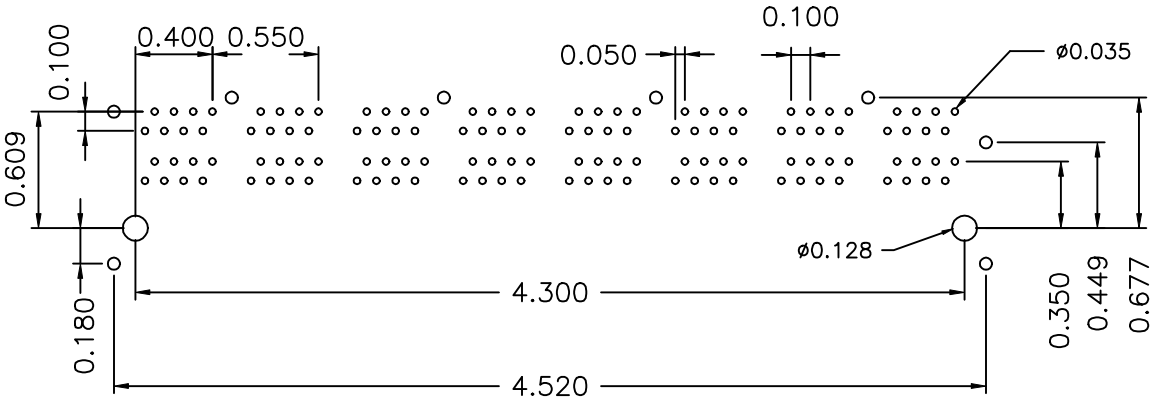

SUGGESTED MOUNTING PATTERN (COMPONENT SIDE)

XFMRS Inc.	Title: Mechanical Dimensions For 2x8 STACKED COMBO Series		
UNLESS OTHERWISE SPECIFIED TOLERANCES: .xxx ±0.010 Dimensions in Inch	P/N: XFATM8F-STACK16-4		REV. A
	DWN.	廣玉坤	Sep-10-02
	CHK.	李清 IL	Sep-10-02
SHEET 2 OF 2	APP.	BW	Sep-10-02

DOC. REV. A/1