Schematic:

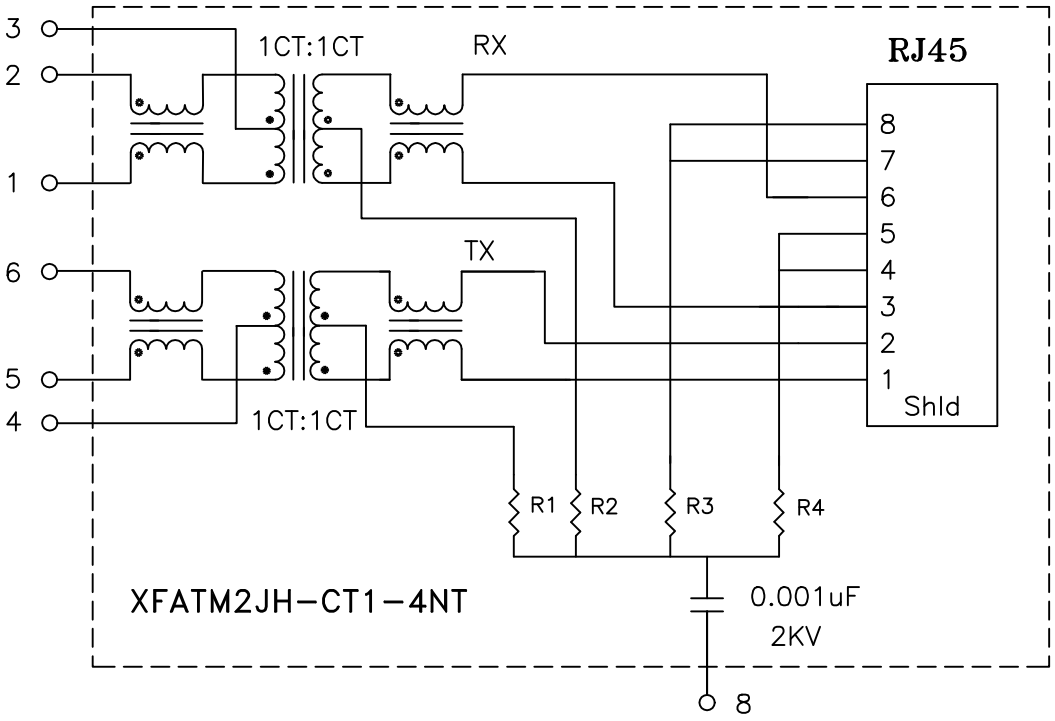

R1,R2,R3,R4: 75 OHMS

Electrical Specifications: @25°C

Isolation Voltage: 1500 Vrms (Input to Output)
Isolation Voltage: 500 Vrms (P1+2+3 to P4+5+6)
Turns Ratio: TX 1CT:1CT ±3% RX 1CT:1CT ±3%
CABLE SIDE OCL: 350uH Minimum @100KHz 100mV 8mADC
Cw/w: 27pF Typical @100KHz 100mV
Insertion Loss (300KHz-100MHz): -1.0dB Maximum
Return Loss: @30MHz -20dB Minimum
@80MHz -15dB Typ

Notes:

1. Solderability: Leads shall meet MIL-STD-202, Method 208D for solderability.
2. Flammability: UL94V-0
3. ASTM oxygen index: > 28%
4. Insulation System: Class F 155°C. UL file E151556
5. Operating Temperature Range: All listed parameters are to be within tolerance from -40°C to +85°C
6. Storage Temperature Range: -55°C to +125°C
7. Aqueous wash compatible

DOC. REV: A/1

XFMRS Inc.	Title: SINGLE PORT COMBO		
UNLESS OTHERWISE SPECIFIED TOLERANCES: .xxx ±0.010 Dimensions in Inch	P/N: XFATM2JH-CT1-4NT		REV. A
	DWN.	李清儿	Jul-14-03
	CHK.	刘小兵	Jul-14-03
SHEET 1 OF 2	APP.	BW	Jul-14-03

Mechanical Dimensions:

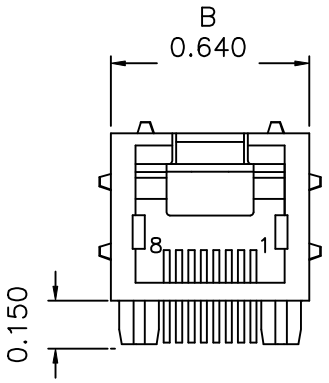

FRONT VIEW

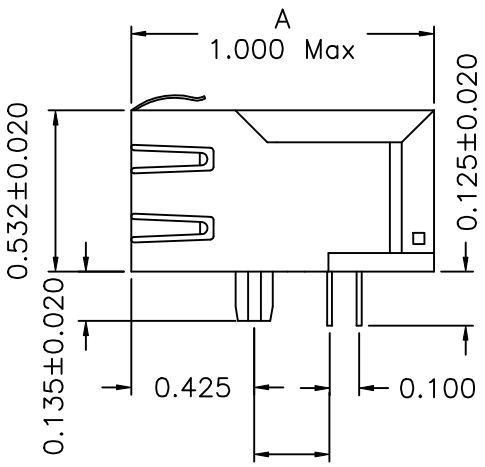

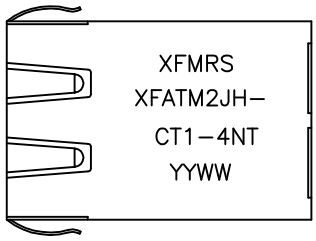

TOP VIEW

Mounting Pattern:

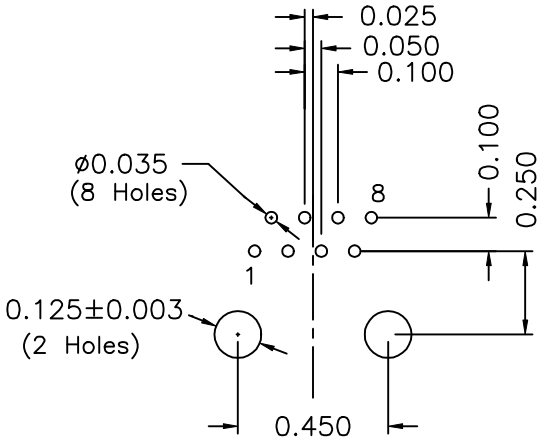

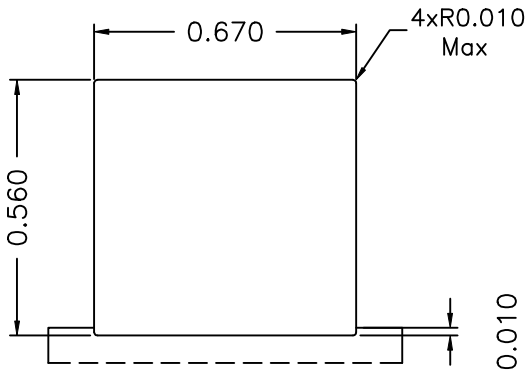

FACE VIEW

RECOMMENDED PANEL CUTOUT

XFMRS Inc.	Title: Mechanical Dimensions For TAB UB RJ45 COMBO		
UNLESS OTHERWISE SPECIFIED TOLERANCES: .xxx ±0.010 Dimensions in Inch	P/N: XFATM2JH–CT1–4NT		REV. A
	DWN.	罗振江	Jul–14–03
	CHK.	袁玉坤	Jul–14–03
SHEET 2 OF 2	APP.	BW	Jul–14–03

DOC REV: A/1