Schematic:

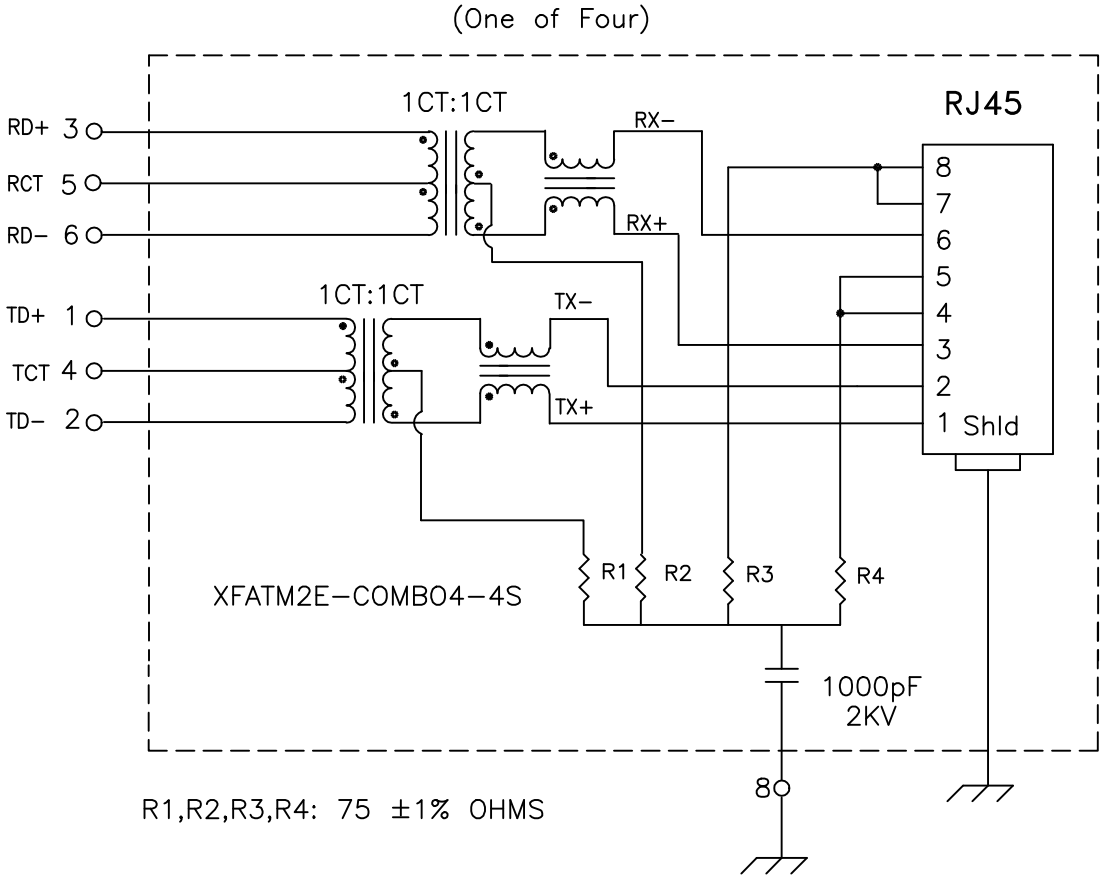

Electrical Specifications: @25°C

Isolation Voltage: 1500 Vrms (INPUT to OUTPUT)
UTP SIDE OCL: 350uH Min @100KHz 100mV 8mADC
Rise Time (10–90%): 2.5ns Typical
Insertion Loss (100KHz–100MHz): –1.1dB Maximum
Insertion Loss (100MHz–125MHz): –1.5dB Maximum
Return Loss: –18dB Typ. @30MHz
–12dB Typ. @80MHz
Crosstalk:
100KHz–60MHz –40dB Typical
60MHz–100MHz –38dB Typical
Common Mode to Differential Mode Rejection:
100KHz–60MHz –45dB Typ (Tx) / –40dB Typ (Rx)
60MHz–100MHz –40dB Typ (Tx) / –35dB Typ (Rx)

Notes:

1. Solderability: Leads shall meet MIL–STD–202, Method 208D for solderability.
2. Flammability: UL94V–0
3. ASTM oxygen index: > 28%
4. Insulation System: Class F 155°C. UL file E151556
5. Operating Temperature Range: –40°C to +85°C
6. Storage Temperature Range: –55°C to +125°C
7. Aqueous wash compatible

DOC. REV A/1

XFMRS Inc.	Title: FOUR PORT COMBO		
UNLESS OTHERWISE SPECIFIED TOLERANCES: .xxx ±0.010 Dimensions in Inch	P/N: XFATM2E–COMBO4–4S		REV. A
	DWN.	李小锋	Oct–14–03
	CHK.	袁玉坤	Oct–14–03
SHEET 1 OF 2	APP.	BW	Oct–14–03

Mechanical Dimensions: (FOR COMBO4-4S)

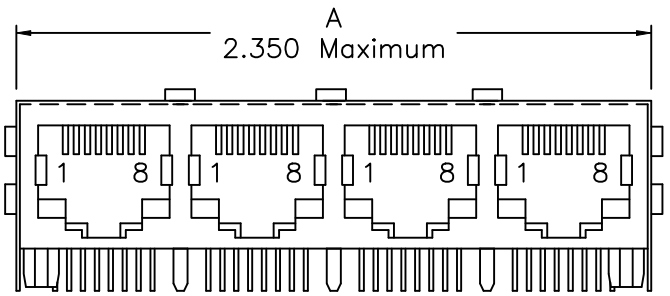

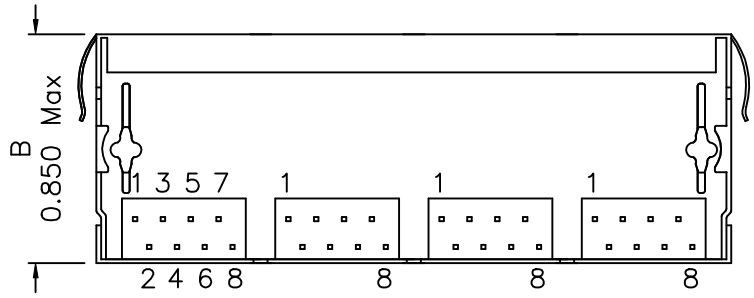

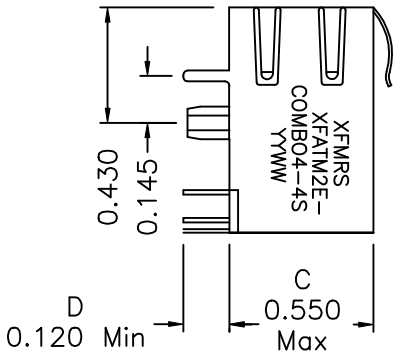

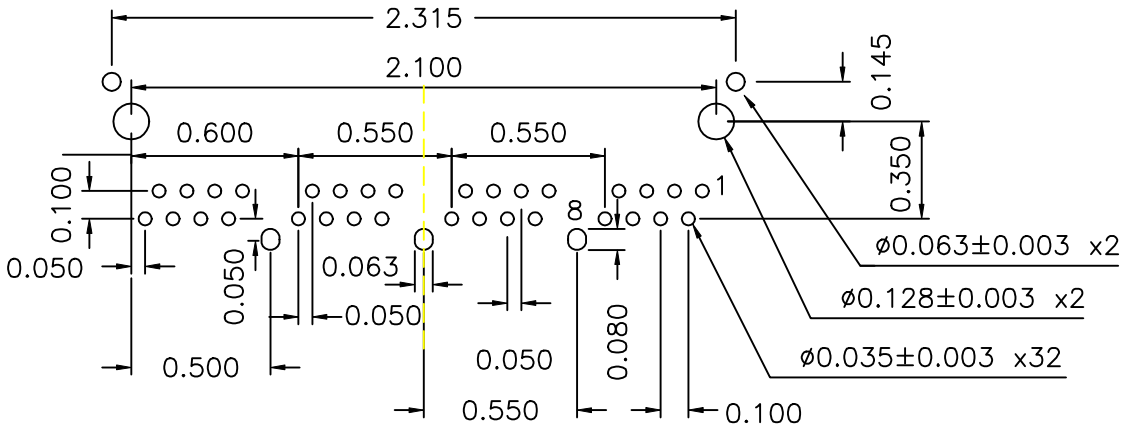

SUGGESTED MOUNTING PATTERN

XFMRS Inc.	Title: Mechanical Dimensions For COMBO4-4S Series		
UNLESS OTHERWISE SPECIFIED TOLERANCES: .xxx ±0.010 Dimensions in Inch	P/N: XFATM2E-COMBO4-4S		REV. A
	DWN.	罗振江	Oct-14-03
	CHK.	袁玉坤	Oct-14-03
SHEET 2 OF 2	APP.	BW	Oct-14-03

DOC. REV: A/1